DiskShelf14 and DiskShelf14mk2 FC Hardware Guide

Network Appliance, Inc.
495 East Java Drive
Sunnyvale, CA 94089 USA
Telephone: +1 (408) 822-6000
Fax: +1 (408) 822-4501
Support telephone: +1 (888) 4-NETAPP
Documentation comments: doccomments@netapp.com
Information Web: http://www.netapp.com

Part number 210-00592
December 2003

Copyright and trademark information

Copyright information

Copyright © 1994–2003 Network Appliance, Inc. All rights reserved. Printed in the U.S.A.

No part of this book covered by copyright may be reproduced in any form or by any means—graphic, electronic, or mechanical, including photocopying, recording, taping, or storage in an electronic retrieval system—without prior written permission of the copyright owner.

Network Appliance reserves the right to change any products described herein at any time, and without notice. Network Appliance assumes no responsibility or liability arising from the use of products described herein, except as expressly agreed to in writing by Network Appliance. The use and purchase of this product do not convey a license under any patent rights, trademark rights, or any other intellectual property rights of Network Appliance.

The product described in this manual may be protected by one or more U.S. patents, foreign patents, or pending applications.

RESTRICTED RIGHTS LEGEND: Use, duplication, or disclosure by the government is subject to restrictions as set forth in subparagraph (c)(1)(ii) of the Rights in Technical Data and Computer Software clause at DFARS 252.277-7103 (October 1988) and FAR 52-227-19 (June 1987).

Trademark information

NetApp and the Network Appliance design are registered trademarks of Network Appliance, Inc. in the United States, Canada, and the European Union. Network Appliance is a registered trademark of Network Appliance, Inc. in Monaco and a trademark of Network Appliance, Inc. in the United States and Canada. FAServer is a registered trademark of Network Appliance, Inc. in the United States and the European Union. NetCache is a registered trademark of Network Appliance, Inc. in the United States, Canada, the European Union, and Japan. SnapCopy is a registered trademark of Network Appliance, Inc. in the European Union and a trademark of Network Appliance, Inc. in the United States. WAFL is a registered trademark of Network Appliance, Inc. in the United States, the European Union, and Canada. DataFabric, FilerView, NearStore, SecureShare, SnapManager, SnapMirror, and SnapRestore are registered trademarks of Network Appliance, Inc. in the United States. Data ONTAP is a trademark of Network Appliance, Inc. in the United States and Canada. Snapshot is a trademark of Network Appliance, Inc. in the United States and the European Union. NetApp–the Network Appliance Company is a registered trademark of Network Appliance, Inc. in the United States and other countries. ApplianceWatch, BareMetal, Center-to-Edge, ContentDirector, gFiler, MultiStore, SecureAdmin, Serving Data by Design, Smart SAN, SnapCache, SnapDrive, SnapVault, vFiler, and Web Filer are trademarks of Network Appliance, Inc. in the United States.

Network Appliance is a licensee of the CompactFlash and CF Logo trademarks.

All other brands or products are trademarks or registered trademarks of their respective holders and should be treated as such.

Table of Contents

Safety Information (Sicherheitshinweise) v

Preface vii

Chapter 1 **Preparing for the Installation**. 1

Differences between the DS14 and DS14mk2 FC 2

Preparing your site 4

Required tools and equipment 7

Planning and organizing the installation 8
- Checking shipment contents 9
- Installation rules and restrictions 10
- Guide to the installation process 11

Chapter 2 **Installing a Disk Shelf** 13

Before you begin your installation 14

Installing a disk shelf in a rack 18

Chapter 3 **Connecting a Disk Shelf**. 25

Connecting disk shelves to a storage appliance 26
- Connecting a disk shelf to a storage appliance. 28
- Connecting multiple disk shelves 32
- Connecting to multiple loops of disk shelves 34

Grounding disk shelves 39

Connecting the disk shelf to a power source 41

Chapter 4 **Monitoring the Disk Shelf**. 43

Monitoring the front operation panel 44

Monitoring the LRCs or ESHs 47

Monitoring the power supply 55

Monitoring the Fibre Channel disk 57

Chapter 5 **Replacing Disk Shelf Devices** 59

Removing a disk shelf 60
Removing a disk shelf from a single disk shelf configuration 61
Removing a disk shelf from a loop. 63

Replacing a disk in a disk shelf. 65

Replacing a power supply in a disk shelf. 68

Replacing an LRC/ESH 72
Removing an LRC/ESH 73
Installing an LRC/ESH. 75
Hot-swapping an LRC/ESH 76
Hot-upgrading or hot-downgrading a disk shelf 78

Appendix A **Adding a Disk Shelf to an Existing System** 83

Installing a disk shelf in an existing mixed-shelf loop 84

Hot-adding a DS14/DS14mk2 FC to an existing loop 89

Appendix B **Recommended Power Line Sizes** 95

Recommended AC power line sizes 96

Calculating the length of DC wires. 97

Appendix C **Communications Regulations**. 103

Regulatory notices 104

Declaration of Conformity 106

Index 107

Safety Information (Sicherheitshinweise)

Safety rules

All products are Class 1 laser devices. You must follow these safety rules when working with this equipment:

WARNING

Failure to follow these directions could result in bodily harm or loss of life.

- **Switzerland only—for FAS900, GF900, R200, and C6200 systems:** This equipment relies on fuses/circuit breakers in the building installation for overcurrent protection. Each power supply must receive power from a separately dedicated outlet with a 10A fuse/circuit breaker.
- When installing disk shelves and a storage appliance into a movable cabinet or rack, install from the bottom up for best stability.
- DC-based systems must be installed in a restricted access location and the two input power terminals for the DC power supply must be connected to separate isolated branch circuits.
- To reduce the risk of personal injury or equipment damage, allow internal components time to cool before touching them and ensure that the equipment is properly supported or braced when installing options.
- This equipment is designed for connection to a grounded outlet. The grounding type plug is an important safety feature. To avoid the risk of electrical shock or damage to the equipment, do not disable this feature.
- This equipment has one or more replaceable batteries. There is danger of explosion if the battery is incorrectly replaced. Replace the battery only with the same or equivalent type recommended by the manufacturer. Dispose of used batteries according to the manufacturer's instructions.

Warning for units with multiple power cords

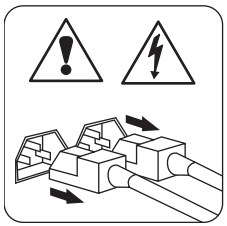

If your storage appliance or disk shelf has multiple power cords and you need to turn the unit off, heed the following warning:

WARNING

This unit has more than one power supply cord. To reduce the risk of electrical shock, disconnect all power supply cords before servicing.

Sicherheitsvorgaben

Alle Produkte sind Lasergeräte der Klasse 1. Die folgenden Sicherheitshinweise sind beim Betreiben des Geräts unbedingt zu beachten:

Vorsicht

Nichtbeachtung dieser Anweisungen kann zu schweren Körperschäden führen oder tödlich sein.

- **Nur für die Schweiz - Systeme FAS900, GF900, R200 und C6200:** Diese Geräte erfordern den Festeinbau von Sicherungen zum Überstromschutz. Jeder Netzanschluss muss mit Strom aus getrennten, speziell für diesen Zweck vorgesehenen Steckdosen versorgt werden, die jeweils mit einer 10A-Sicherung geschützt sind.
- Bei der Montage der Diskettenregale und Archivierungsgeräte, des NetCache™ -Geräts oder des NearStore® -Systems in bewegliche Schränke oder Regale sind die Geräte von unten nach oben einzubauen, um optimale Stabilität zu gewährleisten.
- Gleichstrom-Systeme müssen an Betriebsstaette mit beschraenktem Zutritt installiert sein und die beiden Eingangsstromklemmen für das Gleichstrom-Netzteil müssen an separate und isolierte Abzweigleitungen angeschlossen sein.
- Zum Schutz vor Körperverletzung oder Sachschäden am Gerät lassen Sie die inneren Bauteile stets vor dem Berühren abkühlen. Sorgen Sie dafür, dass das Gerät richtig abgestützt ist oder fest aufrecht steht, bevor Sie neues Zubehör einbauen.
- Dieses Gerät ist für die Einspeisung aus einer geerdeten Netzverbindung ausgelegt. Der Netzstecker mit Erdungsvorrichtung ist ein wichtiger Sicherheitsschutz. Zum Schutz vor elektrischem Schlag oder Sachschäden am Gerät die Erdung nicht abschalten.
- Das Gerät ist mit einer oder mehreren auswechselbaren Batterien ausgestattet. Bei unsachgemäßem Auswechseln der Batterie besteht Explosionsgefahr. Batterien nur mit dem vom Hersteller empfohlenen Typ oder entsprechenden Typen ersetzen. Gebrauchte Batterien sind gemäß den Anweisungen des Herstellers zu entsorgen.

Warnhinweis für Geräte mit mehrfachen Netzanschlussleitungen

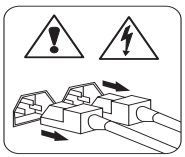

Sollte Ihr Archiviergerät, NetCache-Gerät, NearStore-System oder Diskettenregal mehrfache Netzanschlussleitungen aufweisen und Sie wollen das Gerät abschalten, bitte folgenden Warnhinweis beachten.

ACHTUNG

Gerät besitzt zwei Netzanschlussleitungen. Vor Wartung alle Anschlüsse vom Netz trennen.

Preface

About this guide

This guide describes how to set up, install, connect, and manage the NetApp® Fibre Channel DiskShelf14 (DS14) and DiskShelf14mk2 FC (DS14mk2 FC).

Audience

This guide is for qualified system administrators and service personnel who are familiar with Network Appliance™ filers and/or NetCache™ appliances.

Terminology

This guide uses the following terms:

- *Disk shelf* refers to any Fibre Channel disk shelf model.
- *HA configuration* refers to a disk shelf configuration that has an ESH module instead of an LRC module.
- *LRC module* refers to the device that combines the LRC (Loop Resiliency Circuit), which keeps the FC-AL loop intact during the addition and removal of disks within a disk shelf and the enclosure services processor, which communicates the environmental data of the disk shelf.
- *ESH module* refers to the device that combines the ESH (Embedded Switch Hub), which provides high availability should a disk fail, and the enclosure services processor, which communicates the environmental data of the disk shelf.
- *Device carrier* refers to the container that encases a fan/power supply unit or a disk.
- *Disk* applies to any Fibre Channel disk encased in its device carrier.
- *Loop* refers to one or more daisy-chained disk shelves connected to a storage appliance.
- *Terminate* refers to the process of closing a loop on an LRC or ESH module by activating a termination switch on the last disk shelf in the loop. The termination switch replaces the Output terminators and the auto-termination mechanism in previous versions of Fibre Channel disk shelves.
- *Storage appliance* refers to those NetApp® filers, NetCache appliances, and Fibre-Attached Storage (FAS) appliances that support the disk shelves.
- *Multiloop appliance* refers to a storage appliance with more than one FC-AL adapter connected to disk shelves.

Command conventions

You can enter filer commands on the system console or from any client that can obtain access to the filer using a Telnet session. In examples that illustrate commands executed on a UNIX workstation, the command syntax and output might differ, depending on your version of UNIX.

Formatting conventions

The following table lists different character formats used in this guide to set off special information.

Formatting convention	Type of information
Italic type	◆ Words or characters that require special attention. ◆ Placeholders for information you must supply. For example, if the guide requires you to enter the `fctest` *adaptername* command, you enter the characters "fctest" followed by the actual name of the adapter. ◆ Book titles in cross-references.
`Monospaced` font	◆ Command and daemon names. ◆ Information displayed on the system console or other computer monitors. ◆ The contents of files.
`Bold monospaced` font	Words or characters you type. What you type is always shown in lowercase letters, unless your program is case-sensitive and uppercase letters are necessary for it to work properly.

Keyboard conventions

This guide uses capitalization and some abbreviations to refer to the keys on the keyboard. The keys on your keyboard might not be labeled exactly as they are in this guide.

What is in this guide...	What it means...
hyphen (-)	Used to separate individual keys. For example, Ctrl-D means holding down the Ctrl key while pressing the D key.

What is in this guide...	What it means...
Enter	Used to refer to the key that generates a carriage return, although the key is named Return on some keyboards.
type	Used to mean pressing one or more keys on the keyboard.
enter	Used to mean pressing one or more keys and then pressing the Enter key.

Special messages

This guide contains special messages that are described as follows:

Note

A note contains important information that helps you install or operate the system efficiently.

Caution

A caution contains instructions that you must follow to avoid damage to the equipment, a system crash, or loss of data.

WARNING

A warning contains instructions that you must follow to avoid personal injury.

Preparing for the Installation 1

About this chapter

This chapter describes the preparation requirements for first-time installation of the disk shelf.

Topics in this chapter

This chapter discusses the following topics:

- "Differences between the DS14 and DS14mk2 FC" on page 2
- "Preparing your site" on page 4
- "Required tools and equipment" on page 7
- "Planning and organizing the installation" on page 8

Differences between the DS14 and DS14mk2 FC

Differences between the disk shelves

The following table lists the differences between the DS14 and the DS14mk2 FC.

Note

See the System Configuration Guide at http://now.netapp.com for information about the storage appliance supporting the disk shelf configuration.

Features	DS14	DS14mk2 FC
Shelf chassis	**Front:** Drive bays are not keyed. **Back:** Power supply bays are not keyed.	**Front:** Drive bays are keyed to prevent the use of unsupported drives. **Back:** Power supply bays are keyed to prevent the use of older power supplies that are incompatible. Existence of a 1-Gb/2-Gb loop-speed switch.
Drives in drive carriers	Drive carriers are unkeyed and cannot be used with DS14mk2 FC.	Drive carriers are keyed and can be used with DS14.
Power supplies	◆ Power supplies are unkeyed and cannot be used with DS14mk2 FC. ◆ AC and DC power supplies are available.	◆ Power supplies are keyed and can be used with DS14. ◆ Only AC power supplies are available.
LRC	◆ Requires Data ONTAP™ 6.0 software or later ◆ Requires NetCache 5.1 or later ◆ LRC functions at 1-Gb loop speed	◆ Requires Data ONTAP 6.4.1 or later ◆ Requires NetCache 5.5 or later ◆ LRC functions at 1-Gb loop speed and requires the loop-speed switch to be set at 1-Gb.

Features	DS14	DS14mk2 FC
ESH	◆ Requires Data ONTAP 6.2 or later ◆ ESH functions at 1-Gb loop speed.	◆ Requires Data ONTAP 6.4.1 or later ◆ Requires NetCache 5.5 or later ◆ ESH functions at 1-Gb or 2-Gb loop speed, depending on the system needs.

Preparing your site

About this section

This section tabulates the following information:

- Disk shelf dimensions
- Disk shelf weight
- Space requirements
- Environmental requirements for operating or storing your disk shelf and storage appliance
- Electrical requirements for your disk shelf

Your site must be capable of housing disk shelves with these requirements.

Disk shelf dimensions

The following table lists the dimensions of a single disk shelf.

Dimensions	U.S.	Metric
Height	5.25 in. or 3U, where 1U = 1.75 in.	13.3 cm
Width	17.6 in.	44.7 cm
Depth	20 in.	50.9 cm

Disk shelf weight

The following table lists the weight of a single disk shelf based on its configuration.

Weight	U.S.	Metric
When empty	50.6 lbs	23 kg
With 14 disk drives	77 lbs	35 kg

Space requirements

For the disk shelf to have the proper operating conditions, the front of the disk shelf must be at least 1 inch from the nearest obstruction. The back of the disk shelf must be at least 6 inches from the nearest obstruction.

Environmental conditions

The following table lists the maximum environmental conditions that your site must meet to properly run or store your disk shelf.

Environmental condition	Operating condition	Storage condition
Temperature range	50° F to 104° F (10° C to 40° C)	-40° F to 149° F (-40° C to 65° C)
Relative humidity (noncondensing)	5% to 95%	5% to 95% in original shipping container; otherwise, 50%.

Note

The recommended operating condition temperature range is 68 to 77° F (20 to 25° C).

Electrical requirements

Voltage and inrush current requirements: The following table lists the inrush current and input voltage requirements with power applied to the disk shelf.

Current type	Input voltage	Inrush current
AC	220V AC	50A
	110V AC	40A
DC	-60V DC to -40V DC	No greater than 20A under any conditions

Note

The DC power can operate from a -48V or a +48V DC source.

Power requirements: The following table describes the power requirements for the disk shelf connected to two 20A circuits based on a maximum PSU load.

Type of disk shelf	Volts	Amps per disk shelf	Maximum number of disk shelves
DS14	100V to 120V AC	3.95	4
	200V to 240V AC	1.90	8
	-60V to -40V DC	7.50	N/A
DS14mk2 FC	100V to 120V AC	4.40	4
	200V to 240V AC	2.30	8

Caution

Exceeding the allowed number of disk shelves can lead to power brownouts.

Power consumption and thermal rating: The power consumption (in watts) and the number of BTUs per hour produced by the disk shelf depend on the number and type of devices (for example, power supplies, disks, and so on) installed in the disk shelf.

The following table gives an example of average power consumption for one disk shelf with 14 disks, two fan/power supply units, and two LRC modules.

Type of disk shelf	Power consumption	Thermal rating
DS14	350W	1,195 BTU/hr.
DS14mk2 FC	440W	1,502 BTU/hr.

Required tools and equipment

Required tools and equipment for installation

You need the following tools and equipment:

- #1 and #2 Phillips screwdrivers
- Antistatic wrist strap and grounding leash

Caution

The disk shelf uses electronic components that are sensitive to static electricity. Static discharge from your clothing or other fixtures around you can damage these components. Put on an antistatic wrist strap and grounding leash to free yourself of static electricity before touching any electronic components.

- Appropriate screws, if the provided screws do not fit your rack

Note

This guide assumes that the rack has threaded holes. If it does not, you need to provide clip nuts or nut-bars for fastening the screws.

- Additional tools to fabricate the cables for DS14 disk shelves with DC power supplies:
  - Wire-strippers
  - Soldering tools
  - Pliers
  - 12 AWG x 3C copper wire (determine the length from the requirements of your environment)
  - Three copper compression connectors similar to the Panduit #LCA 8-10

Planning and organizing the installation

Preparing for the installation

This section identifies the shipment contents and the rules and regulations you need to observe for the proper installation of your disk shelf. It also provides an overview of the entire system installation process and the appropriate documentation references for the procedures.

For detailed information

For detailed information, see the following topics:

- "Checking shipment contents" on page 9
- "Installation rules and restrictions" on page 10
- "Guide to the installation process" on page 11

Checking shipment contents

Checking shipment package contents

Make sure that your shipment package includes the following items, in addition to this *DiskShelf14 and DS14mk2 FC Hardware Guide:*

- A disk shelf containing the power supplies and Fibre Channel disks you ordered
- Rack alignment tool
- FC-AL cables, as ordered
- One 0.25m (~10 inches) copper grounding braid and M5 screw
- Four #10-32 screws for securing the disk shelf to a rack

Note

If the #10-32 screws cannot be used in your environment, you need four 6 mm screws.

- Four bezel mounting screw covers
- Envelope with ID labels for the disk shelves, if you are adding these disk shelves to an existing system
- Three mounting kit options for each disk shelf, which contains the following items:
  - A two-post telco tray kit with four M5 screws and one two-piece equipment tray with left and right halves
  - A center-of-gravity kit with a pair of center-of-gravity brackets and four M5 x 8 mm screws for the center-of-gravity brackets. This must be used with the wo-post telco tray kit.
  - A four-post rail kit with one side rail set, one side support set, four location pins, 14 M5 lock washers, 12 M5 washers, four M5 x 18 screws, two M5 x 10 screws/patchlock, 10 M5 x 10 screws, eight M5 nuts, and four M5 cage nuts

Installation rules and restrictions

Rules for installing disk shelves in a rack

You need to observe the following rules and restrictions when installing a disk shelf in a standard 19-inch (48.26 cm) telco equipment rack with mounting rails:

- You must work with another person.

  WARNING
  The disk shelf is extremely heavy. To avoid injuring yourself or damaging the disk shelf, you must work with at least one other person when you install the disk shelf in the rack.

- Install the storage appliance at the bottom of the rack. Installing the storage appliance at the bottom of the rack adds support for the disk shelves.

  WARNING
  Install the equipment from the bottom up when installing it in a movable rack. This helps prevent the rack from tipping over and seriously injuring you or someone else.

  Caution
  The top cover of the storage appliance has ventilation holes. When installing a disk shelf or other equipment above the storage appliance, leave at least 1.5 inches (4 cm) of space for air circulation directly above the ventilation holes. You can install equipment directly on top of the unventilated area of the top cover as long as it does not block the ventilation holes.

- When installing disk shelves in a rack, do not exceed the maximum storage limit for your storage appliance.
- Make sure that the ID on the back panel of each disk shelf matches the ID specified on its label.
- Always install the disk shelves fully loaded.
- If you have any empty drive bays, fill them with the provided empty drive shuttles to ensure proper cooling.

Guide to the installation process

The installation process

The following table provides a guide to the disk shelf installation process.

Stage	Procedure	Is the procedure required?	For instructions, go to...
1	Install the storage appliance in a freestanding rack.	Only if the disk shelf installation is part of a new system installation.	Hardware guide for your storage appliance.
2	Install the disk shelves in the rack.	Yes, if the disk shelf is an addition to your existing system or if your new system was not shipped in a system cabinet.	"Installing a Disk Shelf" on page 13.
3	Connect the disk shelf to the storage appliance.	Only in the following scenarios: ◆ If the disk shelf installation is part of a new system installation. ◆ If the disk shelf is the first in an additional loop to your existing system.	"Connecting a disk shelf to a storage appliance" on page 28.
4	Connect the disk shelves.	Only in the following scenarios: ◆ If the new system installation has multiple disk shelves. ◆ If the disk shelf is an addition to your existing system.	"Connecting multiple disk shelves" on page 32. "Installing a disk shelf in an existing mixed-shelf loop" on page 84.
5	Ground the Fibre Channel disk shelves and storage appliance.	Yes.	"Grounding disk shelves" on page 39.

Stage	Procedure	Is the procedure required?	For instructions, go to...
6	Connect the disk shelves to a power source.	Yes.	"Connecting the disk shelf to a power source" on page 41.
		If the system was shipped in a system cabinet, you must connect the system cabinet to a power source.	See the *System Cabinet Guide*.
7	Configure the system.	Yes, if the disk shelf installation is part of a new system installation.	See the *Data ONTAP Software Setup Guide* or the *NetCache Quick Setup*.

Installing a Disk Shelf 2

About this chapter

This chapter provides all the information you need to install a DS14 or DS14mk2 FC into a rack.

Topics in this chapter

This chapter discusses the following topics:

- "Before you begin your installation" on page 14
- "Installing a disk shelf in a rack" on page 18

Before you begin your installation

About disk shelf installation

Before you install one or more disk shelves in a rack, you need to understand the following information:

- Disk shelf numbering
- Loop IDs
- Supported disk drives
- Drive bay requirements

Disk shelf numbering

Each disk shelf in a loop must have a unique ID. A valid shelf ID is from 1 through 7, with disk shelf 1 connected to the storage appliance. If you install a second or third loop of disk shelves, the disk shelf IDs in each loop must start at 1. The ID of a single disk shelf must be 1.

Note

When connecting a DS14 or DS14mk2 FC to a preexisting mixed-shelf loop, the DS14 or DS14mk2 FC disk shelf ID must be higher than any of the disk shelves already in the loop.

Caution

A DS14 or DS14mk2 FC with ESH modules does not support mixed-shelf loops. Disk shelves with LRC modules must not be present in a loop with ESH modules.

Each disk shelf is shipped with its assigned ID set on its back panel. You must ensure that the disk shelf has the correct ID number on the label. The ID label is on the right side of the disk shelf, as shown in the following illustration.

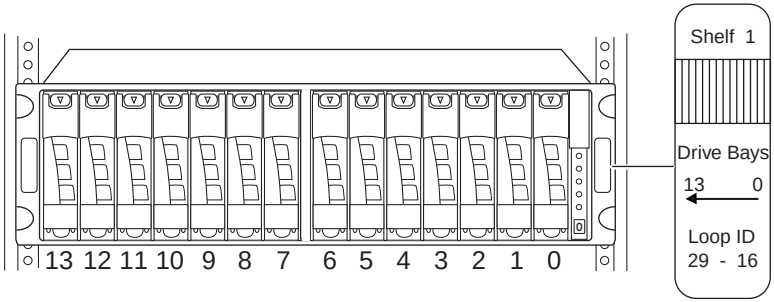

Network Appliance sets the disk shelf IDs at the factory on configured systems, using an ID switch on the back panel. If you order additional disk shelves, you must set the disk shelf ID.

Note

If you enter a shelf ID that is not from 1 through 7, the drive addresses default to those of a shelf with the ID switch set to 7 even though the Shelf ID indicator in the front operation panel displays a dash (-).

The example in the following illustration shows a DS14mk2 FC with the disk shelf ID set to 1.

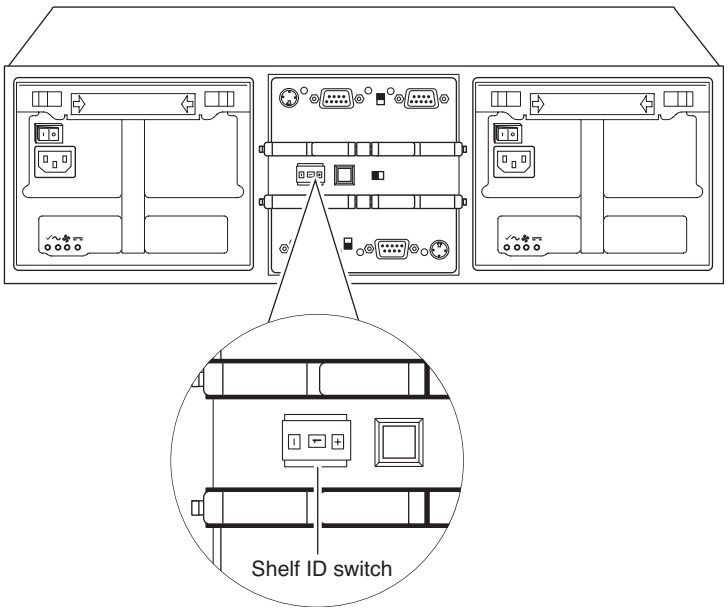

Loop IDs

In addition to identifying the disk shelf ID and the direction of the drive bays, the ID label on the right side of the disk shelf includes the loop ID. The loop ID identifies the disks in the disk shelf. The last sheet of the quick reference cards that come with your disk shelf shows the seven disk shelf IDs and their corresponding loop IDs.

Note

For ESH A, the loop ID is in descending order, and for ESH B, the loop ID is in ascending order.

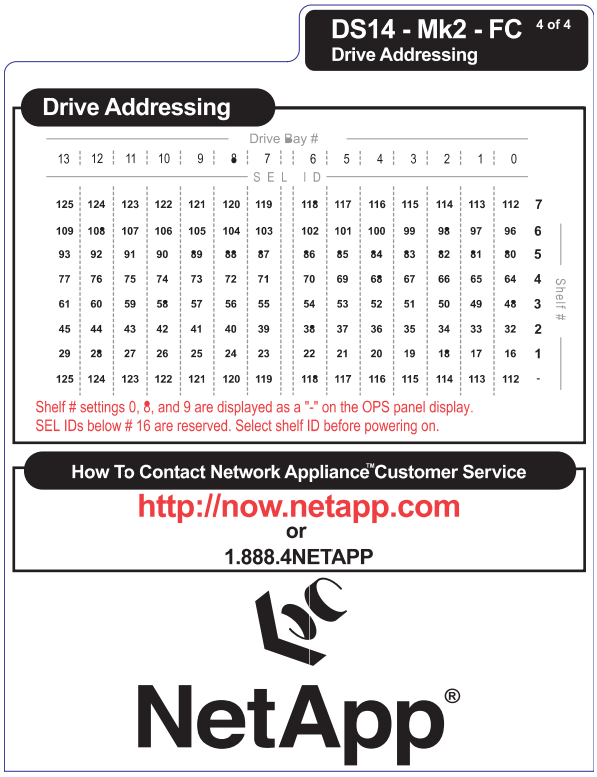

Supported disk drives

The DS14 and DS14mk2 FC support 18-GB, 36-GB, 72-GB, and 144-GB block checksum disk drives.

Drive bay requirements

For enclosure services monitoring to work, drive bays 0 and 1 must contain a disk.

This requirement is posted on the label on the left flange of the disk shelf. The 14 drive bays in the disk shelf are numbered 0 through 13 from right to left, as shown in the following illustration.

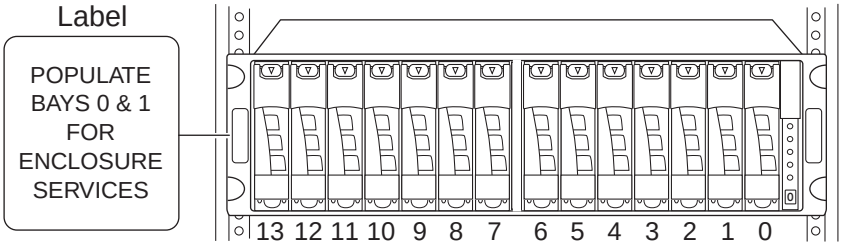

The storage appliance uses the enclosure services monitoring method to monitor environmental conditions of the disk shelf. Enclosure services conditions are communicated to the storage appliance through the LRC/ESH module.

The following table describes the three stages of enclosure services monitoring.

Stage	Device	What it does...
1	Storage appliance	Uses a subset of SCSI-3 commands to monitor the disk shelf for data related to disk presence, temperature, power supply units, and fan status.
2	Storage appliance	Sends the commands through its Fibre Channel interface to drive bays 0 and 1 on the disk shelf.
3	Drive bays 0 and 1	Communicate the request to the LRC/ESH module and send the data to the storage appliance.
	LRC/ESH module	Collects the requested data and sends it to drive bays 0 and 1.

Installing a disk shelf in a rack

Installing a disk shelf

To install the disk shelf in a rack, complete the following steps.

WARNING

You must install each disk shelf with either the two-post telco tray kit or the four-post rail kit that came in your shipment package. If you choose to mid-mount the disk shelf, use the center-of-gravity brackets with the two-post telco tray kit. Do not ear-mount the disk shelf into a telco-type rack; the disk shelf will collapse from the rack under its own weight.

Step	Action	
1	Put on the antistatic wrist strap and grounding leash.	
2	**If the disk shelf is...**	**Then...**
	Part of a new storage appliance system that you are installing	Install your storage appliance. See your storage appliance hardware guide for more information.
	An addition to an existing storage appliance system	Verify that you received the envelope with the disk shelf ID labels.
3	Select two holes on each side of the rack for the installation.	
4	**If you are using the...**	**Then...**
	Two-post telco tray kit	**1.** Align the left-post screw holes on the two-post rack with the screw holes on the left half of the telco tray, then secure it to the post with two M5 screws. **2.** Align the right half of the telco tray with the left half and repeat Step 1 to secure it to the post.

Step	Action
	The following illustration shows the two-post telco tray kit being installed.

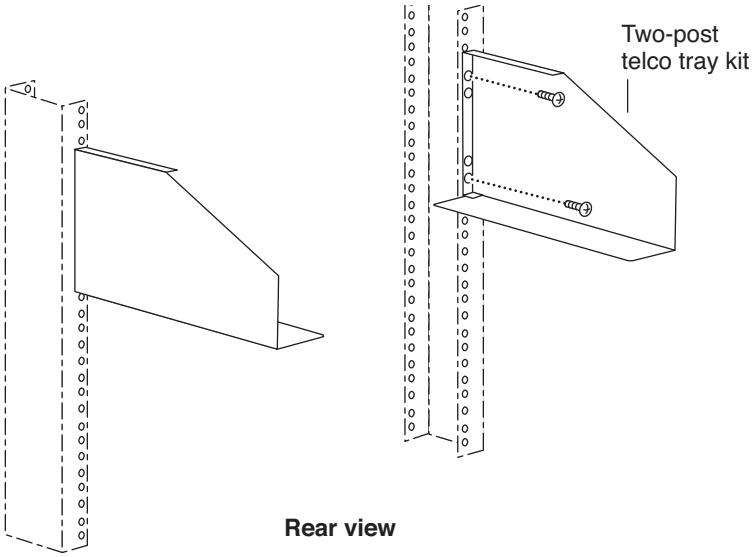

To flush-mount the disk shelf:

1. Install the disk shelf onto the two-post telco tray and retain it with the mounting screws to secure the disk shelf mounting flanges to the telco-type rack.
2. Conceal the mounting screws with the provided bezel mounting screw covers.

The following illustration shows a DS14 being flush-mounted onto the two-post telco tray.

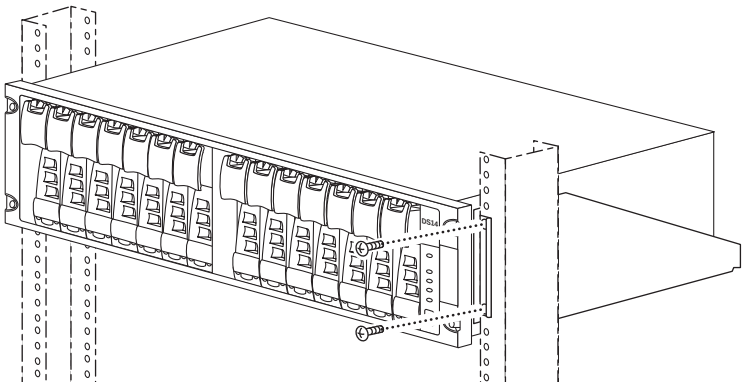

Step	Action

To mid-mount the disk shelf:

1. Select two holes in the middle of each side of the disk shelf to which you want to attach the center-of-gravity brackets and secure the bracket with the #10 Phillips head screws.

The following illustration shows a DS14 installed in a rack using a center-of-gravity bracket.

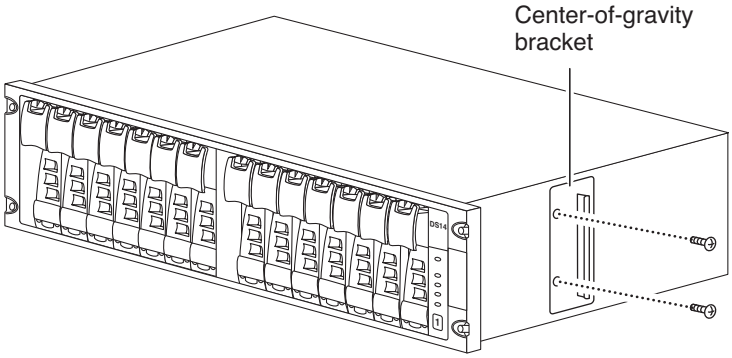

2. Align each bracket on the side of the disk shelf with the chosen holes on the rack and secure the bracket with the #10 Phillips head screws.

The following illustration shows a DS14 installed in a rack using a center-of-gravity bracket.

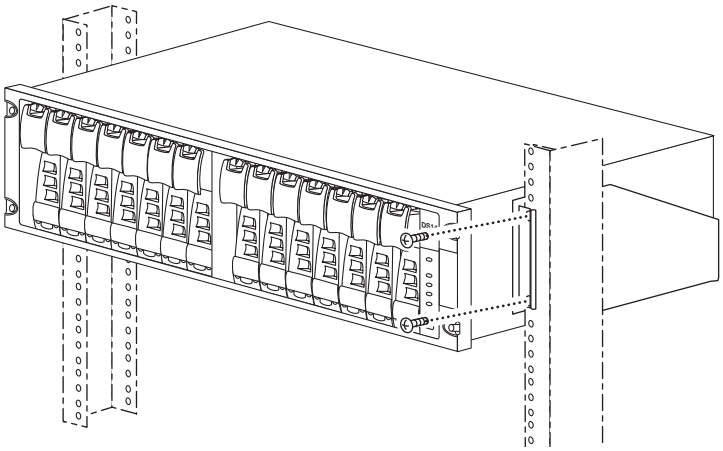

Step	Action	
	Four-post rail kit	For Step 1 through Step 5, see the accompanying illustration. **1.** Connect the left support with the left rail, using three M5 nuts, three lock washers, and three M5 x 10 screws. Leave them loose enough so that you can adjust the length of the rail. **2.** Align the holes in the front of the assembled rail with the front post of the four-post rack, and secure it to the post with two location pins and washers. **3.** Attach the rear of the assembled rail to the rear post using two M5 x 10 screws, washers, and lock washers, then tighten the rail and support. **4.** Repeat Step 1 through Step 3 for the right support rail. **5.** Install the clip nuts for the disk shelf into the equipment rack posts. The bottom-most clip nut should be directly above the bottom locator pin and the top clip nut should be six holes above the bottom clip nut. **6.** Install the disk shelf onto the rack mount kit and retain it with the mounting screws to secure the disk shelf mounting flanges to the front posts of the rack. **7.** Conceal the mounting screws with the provided bezel mounting screw covers.

Step	Action

The following illustration shows how to install a four-post rail kit.

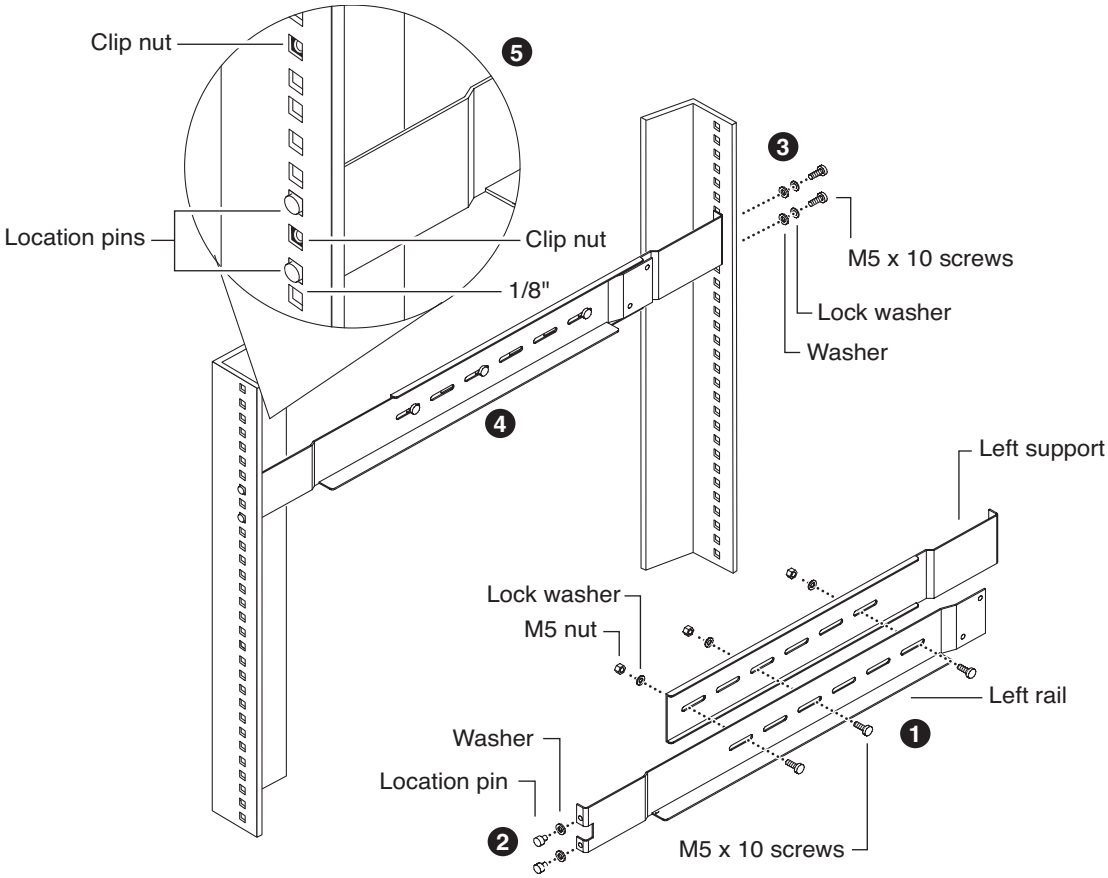

5	If the installed disk shelf is...	Then...
	Part of a new storage appliance system	Make sure that the disk shelf ID is correct. **Note** For a single disk shelf installation, the disk shelf ID is 1.

Step	Action	
	An addition to an existing storage appliance system	Change the disk shelf ID with the following procedure: **1.** Press the thumbwheel switch on the rear of the disk shelf and use the + button to raise the number and the - button to lower the number to a valid ID from 1 through 7. **Note** If you change a disk shelf ID, you must power-cycle the disk shelf for the new ID to take effect. The disk shelf ID display on the front of the disk shelf blinks until you power-cycle the disk shelf. **2.** Select the correct label from the envelope identified in Step 2 and attach it to the right flange of the new disk shelf.
6	**If disk shelves in the loop to which you are adding the new disk shelf have...**	**Then...**
	LRCs	◆ DS14 only: Go to Step 7. ◆ A mix of DS14 and DS14mk2 FC: Set the loop speed to 1 Gb. **Caution** An incorrectly set loop speed results in an open loop condition.
	ESHs	◆ DS14 only or a mix of DS14 and DS14mk2 FC: Set the loop speed to 1 Gb. ◆ DS14mk2 FC only that are running at 1 Gb: Set the loop speed to 1 Gb. ◆ DS14mk2 FC only that are running at 2 Gb: Set the loop speed to 2 Gb. **Caution** An incorrectly set loop speed causes the storage appliance to panic.

Step	Action
7	If there are multiple disk shelves in the installation on the same loop, follow Step 4 and Step 5 to install the remaining disk shelves in ascending numerical order, according to the IDs on their labels.
8	Go to “Connecting a Disk Shelf” on page 25.

Connecting a Disk Shelf 3

About this chapter

This chapter describes how to connect a single disk shelf or a loop of disk shelves to a supported storage appliance, how to ground your system, and how to connect your system to power.

Topics in this chapter

This chapter discusses the following topics:

- "Connecting disk shelves to a storage appliance" on page 26
- "Grounding disk shelves" on page 39
- "Connecting the disk shelf to a power source" on page 41

Connecting disk shelves to a storage appliance

Considerations for connecting the disk shelves

This section describes how to connect the disk shelf to a supported storage appliance. The following table presents what to consider when connecting the disk shelf to a storage appliance.

Type and number of FC-AL adapters in the storage appliance	LRC connectivity	ESH connectivity
1 copper adapter	A single loop is the supported configuration for an unclustered storage appliance. LRC B must be terminated.	Unsupported
2 copper adapters	A dual loop is a supported configuration for an unclustered storage appliance. LRCs B must be terminated. A single loop is the preferred configuration for an unclustered storage appliance because it provides for load balancing on the shelf.	Unsupported
4 copper adapters	For a clustered or mirrored storage appliance, a dual loop is the supported configuration. Mirroring requires Data ONTAP™ 6.1 software or later.	Unsupported
1 dual optical adapter	A single loop is the supported configuration for an unclustered storage appliance.	

Type and number of FC-AL adapters in the storage appliance	LRC connectivity	ESH connectivity
2 to 4 dual optical adapters	A multiple loop is the supported configuration for a clustered or mirrored storage appliance.	

Disk shelf cabling requirements

The following table lists the cabling requirements for the disk shelves.

Type of device	Cabling requirements
LRC	◆ Can only connect to another LRC. ◆ Uses HSSDC to DB9 cables when connecting to copper FC-AL adapters and SC to LC cables when connecting to optical FC-AL adapters. ◆ Uses DB9 to DB9 cables for connections between shelves.
ESH	◆ Can only connect to another ESH. ◆ Uses LC to LC cables when connecting to optical FC-AL adapters. **Note** Connecting to copper adapters is unsupported. ◆ Uses HSSDC2 to HSSDC2 cables for connections between shelves.

For detailed information

The following sections provide detailed information about connecting one or more disk shelves in a rack:

- "Connecting a disk shelf to a storage appliance" on page 28
- "Connecting multiple disk shelves" on page 32
- "Connecting to multiple loops of disk shelves" on page 34

Connecting a disk shelf to a storage appliance

Assumptions about this procedure

The assumption about this procedure is that the disk shelf is the only disk shelf connected to the storage appliance or it is the first disk shelf in a single loop.

Connecting a disk shelf to a storage appliance

To connect the disk shelf to a storage appliance, complete the following steps.

Step	Action	
1	Put on the antistatic wrist strap and grounding leash.	
2	Make sure that the storage appliance and the disk shelf are turned off.	
3	**If...**	**Then...**
	Your storage appliance has an FC-AL adapter with a single copper interface	Connect the cable to the FC-AL adapter on the storage appliance.
	Your single filer has two FC-AL adapters with single copper interfaces	Connect the cable to one of the FC-AL adapters on the filer.
	Your storage appliance has a dual optical interface	Connect one end of the dual-headed cable into Port A (Port 1) of the adapter on the storage appliance.
4	**If the LRC/ESH A input...**	**Then...**
	Has a copper interface	**1.** Connect the other end of the cable to the LRC A Input on disk shelf 1. **2.** If applicable, tighten the locking screws on the connector with a screwdriver.

Step	Action	
	The following illustration shows a DS14 connected to a storage appliance using a copper interface. 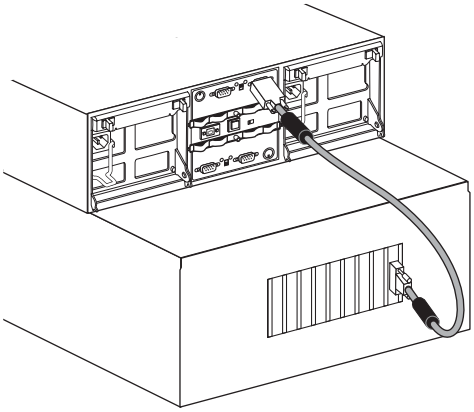	
	Has an optical interface	Connect the other end of the dual-headed cable to the LRC/ESH A Input on disk shelf 1.
	The following illustration shows a DS14 connected to a storage appliance using a dual optical interface. 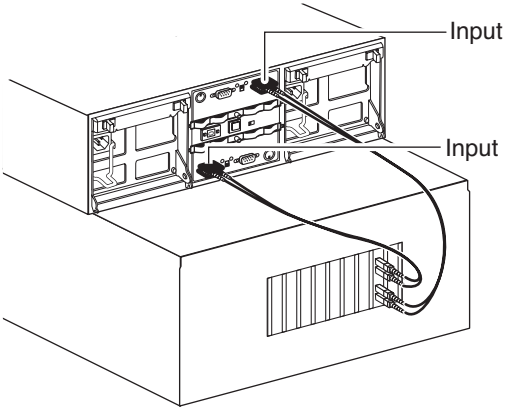	

Step	Action	
5	Set the termination switch on Channel A to the On position (down). The following illustration shows the termination switch set to the On position on LRC/ESH A. 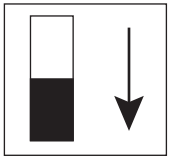 LRC A active terminate position	
6	**If...**	**Then...**
	Your storage appliance has an FC-AL adapter with a single copper interface	Go to Step 7.
	Your single filer has two FC-AL adapters with single copper interfaces	Connect the cable to the second FC-AL adapter on the filer.
	Your storage appliance has a dual optical interface	Connect one end of the dual-headed cable into Port B (Port 2) of the adapter on the storage appliance.
7	**If the LRC/ESH B input...**	**Then...**
	Is a copper interface on a DS14 and is not part of a clustered filer system	Place a terminator on the Fibre Channel input of LRC B.
	Has a copper interface and your single filer and has two FC-AL adapters with single copper interfaces	**1.** Connect the other end of the cable to the LRC B Input on disk shelf 1. **2.** If applicable, tighten the locking screws on the connector with a screwdriver.

Step	Action	
	Is part of a clustered filer, mirrored cluster, or MetroCluster system	See the cluster guide for your filer for more information.
	Has an optical interface	Connect the other end of the dual-headed cable to the LRC/ESH B Input on disk shelf 1.
8	**If the disk shelf...**	**Then...**
	Is the only disk shelf in the loop connected to the storage appliance	**1.** Set the termination switch on Channel B to the On position (up). **Note** The On position of LRC/ESH B is the inverse of LRC/ESH A. **2.** Connect the disk shelf to a power source. See "Connecting the disk shelf to a power source" on page 41.
	Is the first disk shelf in a loop of disk shelves	Connect the disk shelf to the remaining disk shelves. See "Connecting multiple disk shelves" on page 32.

Connecting multiple disk shelves

Connecting multiple disk shelves

To connect multiple disk shelves, complete the following steps.

Step	Action
1	Connect the remaining disk shelves in ascending order by completing the following connections: **1.** Connect one end of the cable to the LRC/ESH A Output on the disk shelf. **2.** Connect the other end of the cable to the LRC/ESH A Input on the next disk shelf.
2	On all but the last disk shelf in the loop, place the termination switch on LRC/ESH A to the Off position (up).
3	On the last disk shelf in the loop, place the termination switch on LRC/ESH A to the On position (down).
4	Connect the remaining disk shelves in ascending order by completing the following connections: **1.** Connect one end of the cable to the LRC/ESH B Output on the disk shelf.

Step	Action
	2. Connect the other end of the cable to the LRC/ESH B Input on the next disk shelf. The following illustration shows the LRC of a DS14mk2 FC being connected to the LRC another DS14mk2 FC. 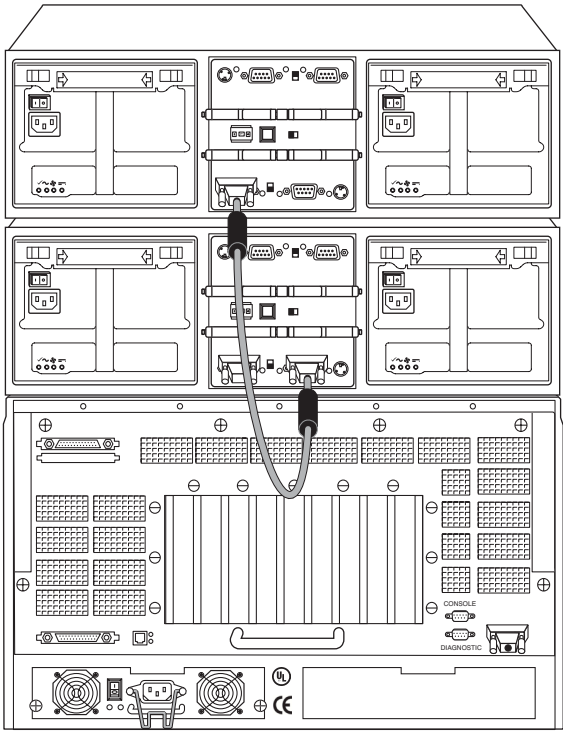
5	On all but the last disk shelf in the loop, place the termination switch on LRC/ESH B to the Off position (down).
6	On the last disk shelf in the loop, place the termination switch on LRC/ESH B to the On position (up).
7	Connect the disk shelf to a power source. See “Connecting the disk shelf to a power source” on page 41.

Connecting to multiple loops of disk shelves

Requirements for connecting additional loops

Before you connect multiple loops of disk shelves, make sure that your storage appliance meets the following requirements:

- Multivolumes and RAID are correctly configured for filers. See the Data ONTAP *System Administrator's Guide* for information about how to configure multivolumes and RAID.
- The disk firmware is up-to-date for all the disks in each disk shelf. Go to http://now.netapp.com for the correct firmware versions.
- Multiple loop configurations are supported by your storage appliance. See the System Configuration Guide at http://now.netapp.com for information about the current configurations supported by your storage appliance.

Connecting multiple loops to a storage appliance

Each additional loop requires an FC-AL disk adapter in the storage appliance. See the System Configuration Guide at http://now.netapp.com for information about adapters supported by your storage appliance. The following illustration shows a storage appliance connected to two loops of DS14 disk shelves without the benefit of multipath cabling.

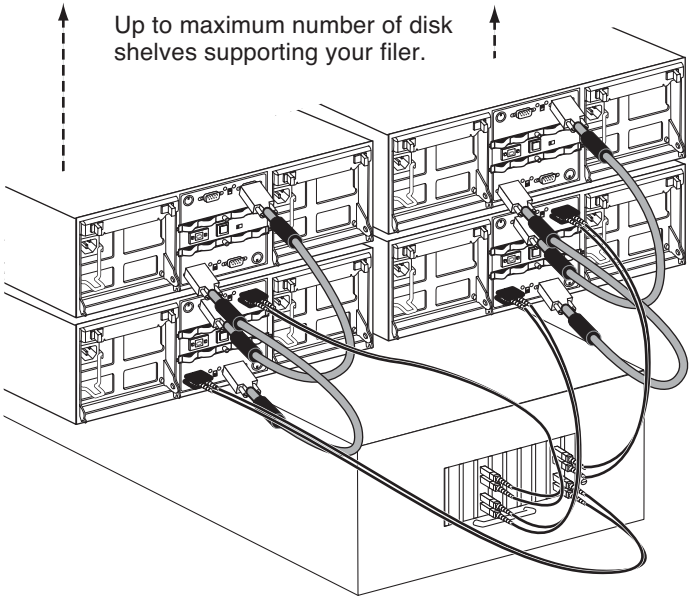

To connect another loop of disk shelves to a storage appliance, complete the following steps.

Step	Action	
1	**If...**	**Then**
	Your single filer has four FC-AL adapters with single copper interfaces	Connect the loop to the remaining pair of FC-AL adapters on the filer by following the procedure in "Connecting a disk shelf to a storage appliance" on page 28.
	Your storage appliance has a dual optical interface	**1.** Follow Step 1 through Step 6 of the procedure in "Connecting a disk shelf to a storage appliance" on page 28. **2.** Connect the storage appliance to LRC/ESH B of disk shelf 1 in the next loop of disk shelves. See "Ensuring data integrity with multiple loops" on page 35 which tabulates possible cabling options. **3.** Go to Step 8 of the procedure in "Connecting a disk shelf to a storage appliance" on page 28.

Ensuring data integrity with multiple loops

Software enhancements provided by Data ONTAP 6.1 or later enable you to ensure data integrity and incorporate redundancy through the use of multipath cabling in your filer system.

FC-AL adapters with the copper interface: Each loop of disk shelves must be connected to two FC-AL adapters.

The following table shows the possible configuration for a filer with four adapters connected to two loops of shelves.

Number of loops		Number of copper interface adapters			
		1	**2**	**3**	**4**
1	LRC A	X	-	-	-
	LRC B	-	-	-	X
2	LRC A	-	-	X	-
	LRC B	-	X	-	-

The following illustration shows a filer with two copper FC-AL adapters connected to a single loop of DS14 disk shelves with the benefit of multipath cabling.

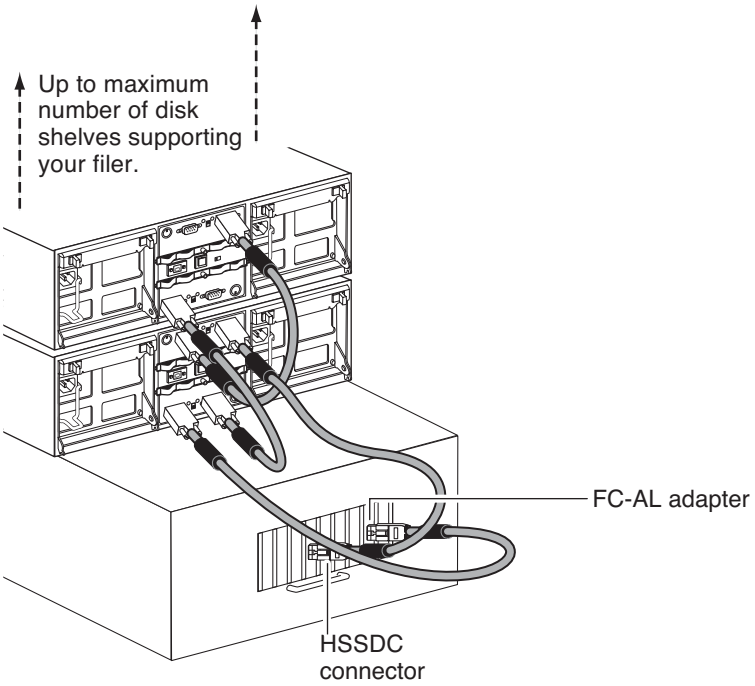

FC-AL adapters with the dual optical interface: If Port A (Port 1) of the adapter is connected to the LRC/ESH A of disk shelf 1 of a particular loop, Port B (Port 2) of the same adapter is not connected to LRC/ESH B of disk shelf 1 of

the same loop. This is done in order to insure maximum redundancy at the FC-AL Host Bus adapter level. The following table shows the possible configuration for a storage appliance with two adapters connected to two loops of shelves.

Number of loops		Number of dual optical interface adapters			
		1		2	
		A	B	A	B
1	LRC/ESH A	X	-	-	-
	LRC/ESH B	-	-	-	X
2	LRC/ESH A	-	-	X	-
	LRC/ESH B	-	X	-	-

The following illustration shows a filer with two dual optical FC-AL adapters connected to two loops of DS14 disk shelves with LRC modules that have the benefit of multipath cabling.

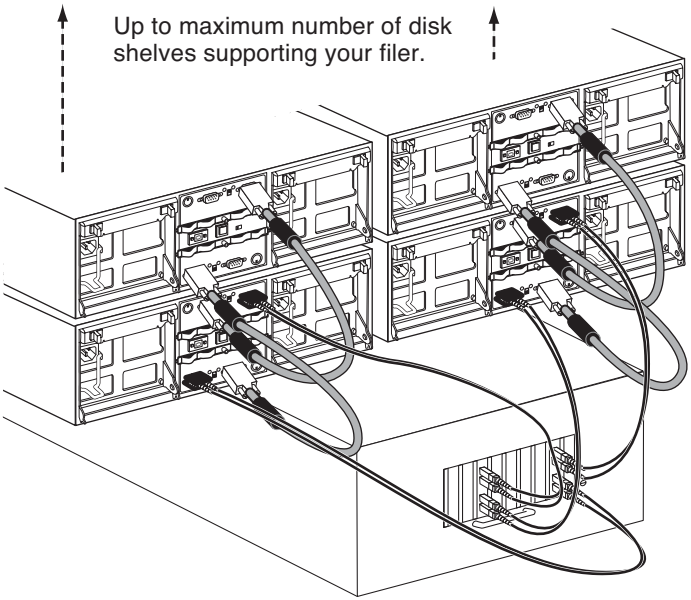

The following table shows a possible configuration for a filer with three adapters connected to three loops of DS14/DS14mk2 FC disk shelves.

		Number of dual optical interface adapters					
		1		2		3	
Number of loops		A	B	A	B	A	B
1	LRC/ESH A	X	-	-	-	-	-
	LRC/ESH B	-	-	-	X	-	-
2	LRC/ESH A	-	-	X	-	-	-
	LRC/ESH B	-	-	-	-	-	X
3	LRC/ESH A	-	-	-	-	X	-
	LRC/ESH B	-	X	-	-	-	-

The following table shows the possible configuration for a filer with four adapters connected to four loops of DS14/DS14mk2 FC disk shelves.

		Number of dual optical interface adapters							
		1		2		3		4	
Number of loops		A	B	A	B	A	B	A	B
1	LRC/ESH A	X	-	-	-	-	-	-	-
	LRC/ESH B	-	-	-	X	-	-	-	-
2	LRC/ESH A	-	-	X	-	-	-	-	-
	LRC/ESH B	-	-	-	-	-	X	-	-
3	LRC/ESH A	-	-	-	-	X	-	-	-
	LRC/ESH B	-	-	-	-	-	-	-	X
4	LRC/ESH A	-	-	-	-	-	-	X	-
	LRC/ESH B	-	X	-	-	-	-	-	-

Grounding disk shelves

About grounding connected disk shelves

For proper grounding, you must daisy-chain the disk shelves and storage appliance together with the provided braided copper cables and screws. Multiple racks should be grounded together.

Each disk shelf is shipped with a 0.25m (~6 inch) braided copper cable and an M5 x 0.5 inch Phillips head screw. The copper cable has a hole on each end for grounding filer-to-shelf or shelf-to-shelf.

The storage appliance is shipped with a 0.75m (~19 inch) braided copper cable and an 8-32 x 0.5 inch Phillips head screw. The copper cable has a lug connector on each end for grounding filer-to-shelf or filer-to-second loop.

Note

The copper cable shipped with the storage appliance is only necessary when grounding the storage appliance to a second loop, or when grounding the storage appliance to a disk shelf farther away than 0.75m (the length of the filer-to-shelf cable).

Grounding connected disk shelves

To ground connected disk shelves to a storage appliance, complete the following steps.

Step	Action
1	Secure the lug at one end of the 0.25m braided copper cable to the threaded insert at the back of the storage appliance using the M5 x 0.5 inch screw.
2	Overlay the hole on one end of another 0.25m copper cable to the unused lug end of the copper cable connected to the storage appliance.
3	Using the provided M5 x 0.5 inch shelf screw, connect both copper cables to the threaded hole adjacent to the power supply receptacles on disk shelf 1.

Step	Action
4	Overlay the hole on one end of another 0.25m copper cable to the unused lug end of the copper cable connected to the preceding disk shelf.
5	Using the provided M5 x 0.5 inch shelf screw, connect both copper cables to the threaded hole adjacent to the power supply receptacles on the next disk shelf. The following illustration shows disk shelves grounded to an F700 series filer. While the location for the grounding holes for the various storage appliances may be different, you can ground any NetApp storage appliance in a similar manner. 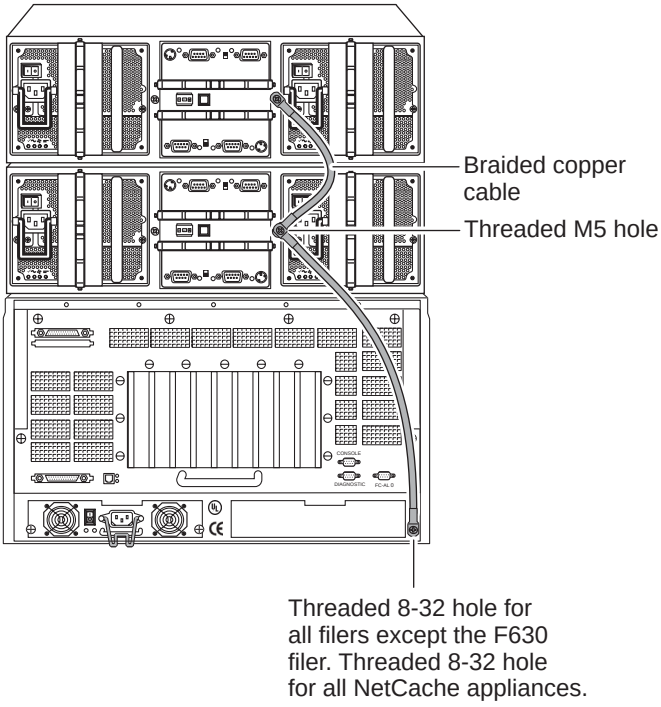
6	Repeat Step 4 and Step 5 with the supplied braided copper cables until the storage appliance and all disk shelves are grounded together.

Connecting the disk shelf to a power source

About the power supplies

The disk shelf is shipped with two power supplies, labeled PSU1 and PSU2, respectively.

About AC power supplies: The disk shelf is shipped with an AC power cord for each power supply. You must have separate circuit breakers for each power supply.

About DC power supplies: DC power supplies are supported for use in the DS14 shelf only. You must fabricate the power cords for the DC power connections.

Connecting the disk shelf to power

To connect a disk shelf to a power source, complete the following steps.

Step	Action	
1	Make sure that the storage appliance and the disk shelves are turned off.	
2	**If you are connecting to...**	**Then...**
	AC power	**1.** Plug the power cord for PSU1 into the power receptacle on the left connector (rear view). **2.** Plug the power cord for PSU2 into the power receptacle on the right connector (rear view). **3.** Fasten the power cords with the clamps. **4.** Plug the other end of each power cord into a grounded AC power source.

Step	Action	
		5. Turn on the power switch. **Note** The default spin up time for all disks in the disk shelf is 60 seconds. Reduce this spin up time to 20 seconds by turning on the switches of both power supplies within 5 seconds of each other.
	DC power	**1.** Remove the cover over the DC input connector. **2.** Fabricate a three-way cable: **a.** Use wire-strippers to strip an inch of the protective sheathing from the copper wire. **b.** Identify the positive, negative, and ground wires. **c.** Crimp and solder a connector to the end of the positive, negative, and ground wires. **3.** Connect the ground, positive, and negative wires to the power supply. **4.** Place the terminal cover over the DC input connector to avoid shorting the power supply cables. **5.** Plug the other end of each power cord into a power source and turn it on.

Monitoring the Disk Shelf

4

About this chapter

This chapter describes how to monitor the disk shelf from the error messages displayed on the console that is connected to the storage appliance and identifies the location of the various LEDs on the disk shelf.

Note

The quick reference cards in the slide-out tray at the base of the disk shelf describe the functions of each LED on the disk shelf and the suggested course of action.

Topics in this chapter

This chapter discusses the following topics:

- "Monitoring the front operation panel" on page 44
- "Monitoring the LRCs or ESHs" on page 47
- "Monitoring the ESH" on page 50
- "Monitoring the Fibre Channel disk" on page 57

Monitoring the front operation panel

About monitoring the front operation panel

The front operation panel has five LEDs and a disk shelf ID display. The LEDs indicate whether your disk shelf is functioning normally or there are problems with the hardware. You can also identify any hardware failure associated with the front operation panel of the disk shelf from the error messages displayed on your storage appliance console.

Location of LEDs

The following illustration shows the location of the disk shelf ID display and the front panel LEDs.

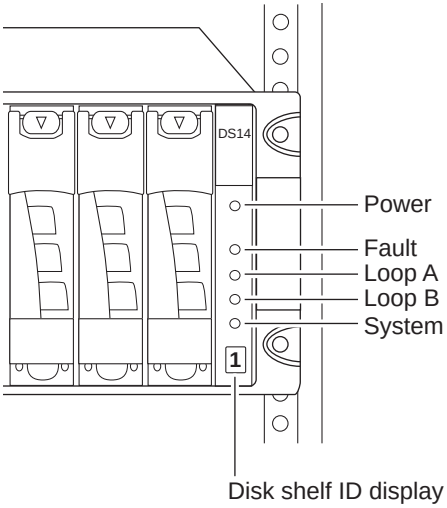

Note

The Fault and System LEDs are amber. The other three LEDs are green. See "LED status on the front operation panel" on page 45 for an illustrated explanation of how the LEDs function.

Monitoring the disk shelf ID

When you use the thumbwheel switch on the back of the disk shelf to change the disk shelf ID, the disk shelf ID display on the front panel blinks until you power-cycle the disk shelf to make the change take effect.

LED status on the front operation panel

The following illustration is of the first sheet of the quick reference cards that come with your disk shelf. It shows the normal and fault conditions that the LEDs indicate and recommends a corrective action.

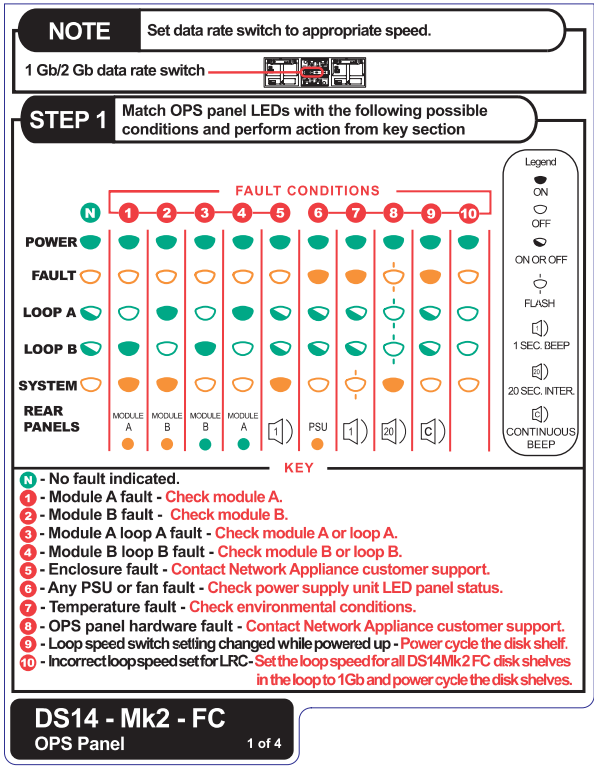

Front operation panel console error messages

The following error messages appear on your storage appliance console if an SES element on the front operation panel fails. For information about replacing a disk shelf, see “Removing a disk shelf” on page 60.

Error message	Action required
`Temperature sensor Element 1: failed`	The temperature sensor on the front operation panel failed. Contact Network Appliance customer service to replace the disk shelf.

Error message	Action required
`Alarm` `Element 1: failed`	The alarm on the front operation panel failed. Contact Network Appliance customer service to replace the disk shelf.
`Display` `Element 1: failed`	The alarm on the front operation panel failed. Contact Network Appliance customer service to replace the disk shelf.

Monitoring the LRCs or ESHs

About monitoring the LRCs or ESHs

The LRC has three LEDs and the ESH has four LEDs. The LEDs common to both modules indicate whether the LRC/ESH is functioning normally or there are any problems with the hardware. The fourth LED on the ESH module indicates 2 Gb operation when lit.You can also identify any hardware failure associated with the LRCs/ESHs from the error messages displayed on your storage appliance console.

This section also describes the different types of messages that appear on the storage appliance console in response to a command monitoring the ESH.

Location of LRC/ESH module LEDs

The LRCs/ESHs are in the middle of the back of the disk shelf. The ESH module has a perforated carrier. The following illustration shows the location of the LEDs for an LRC with copper interfaces.

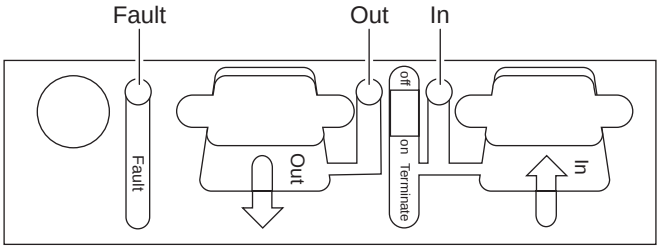

Note

The Fault LED is amber. The other two LEDs are green. See “LED status on the LRC/ESH” on page 48 for an illustrated explanation of how the LEDs function.

The following illustration shows the location of the LEDs for an LRC with an optical input interface and copper output interface.

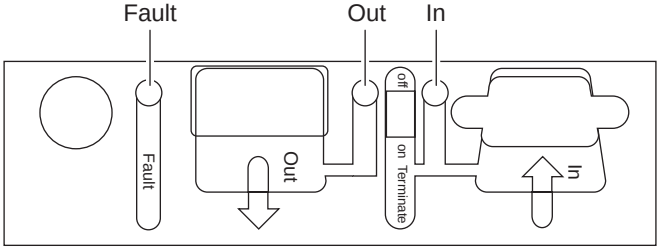

The following illustration shows the location of the LEDs for an ESH.

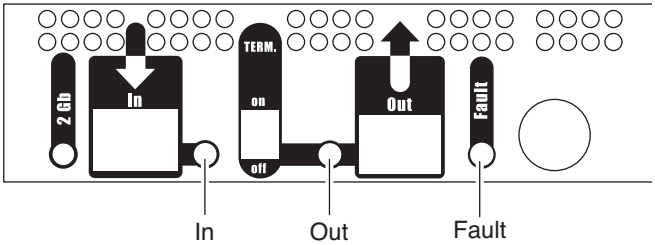

Note

Because LRC/ESH B on the DS14 is inverted, the location of the LRC/ESH B LEDs is the inverse of what is shown in the preceding illustrations.

LED status on the LRC/ESH

The following illustration is of the second sheet of the quick reference cards that come with your disk shelf.

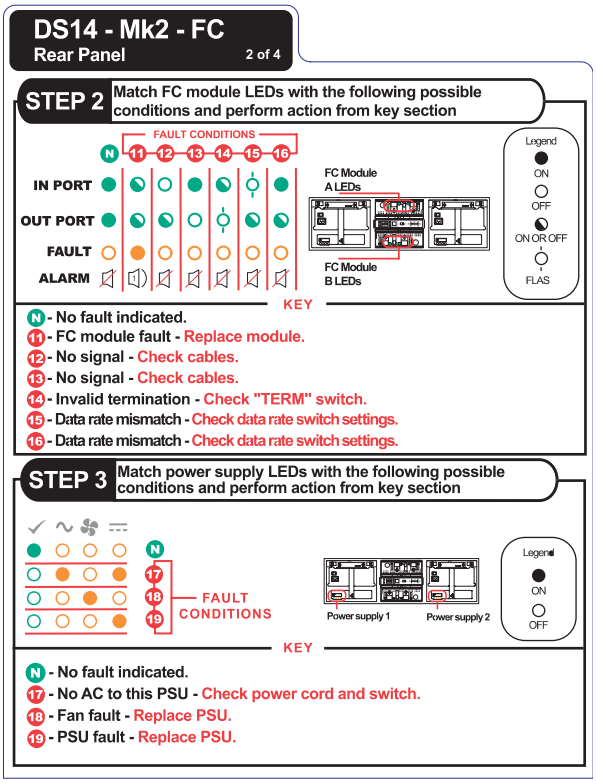

Note

The rest of the second sheet of the quick reference card identifies the LED status conditions for the power supply and the integrated fan module.

LRC/ESH console error messages

The following error messages appear on your storage appliance console if an SES element on the LRC/ESH fails. For information about replacing the LRC/ESH, see "Replacing an LRC/ESH" on page 72.

Error message	Action required
`Temperature sensor Element 2: failed`	The temperature sensor on LRC module A on the top back of the disk shelf failed. Contact Network Appliance customer service to replace the LRC.
`Temperature sensor Element 3: failed`	The temperature sensor on LRC module B on the bottom back of the disk shelf failed. Contact Network Appliance customer service to replace the LRC.
`SES electronics Element 1: component is from a different product family`	This is and unsupported configuration. The shelf contains an ESH and LRC. This configuration is only supported for the process of hot upgrading from LRC to ESH
`SES electronics Element 1: failed`	LRC/ESH module A on the top back of the disk shelf failed. Contact Network Appliance customer service to replace the LRC.
`SES electronics Element 2: failed`	LRC/ESH module B on the bottom back of the disk shelf failed. Contact Network Appliance customer service to replace the LRC.
`Temperature sensor Element 2: not installed or failed`	Communication was possible with the temperature sensor on ESH module A at one point, but it is not possible now. Even if traffic is flowing through the Fibre Channel loop, contact Network Appliance customer service to replace the ESH.

Error message	Action required
`Temperature sensor Element 3: not installed or failed`	Communication was possible with the temperature sensor on ESH module B at one point, but it is not possible now. Even if traffic is flowing through the Fibre Channel loop, contact Network Appliance customer service to replace the ESH.
`SES electronics Element 1: not installed or failed`	Communication was possible with ESH module A at one point, but it is not possible now. Even if traffic is flowing through the Fibre Channel loop, contact Network Appliance customer service to replace the ESH.
`Vendor-specific Element 1: not installed or failed`	
`SES electronics Element 2: not installed or failed`	Communication was possible with ESH module B at one point, but it is not possible now. Even if traffic is flowing through the Fibre Channel loop, contact Network Appliance customer service to replace the ESH.
`Vendor-specific Element 2: not installed or failed`	

Monitoring the ESH

Command to use: The `storage show hub` command enables you to monitor the ESH.

Sample output: The following is an example of the output from the `storage show hub` command. The exact messages that appear on your system console depend on your system configuration.

```
Hub name: 9.shelf2
Channel: 9
Loop: B
Shelf id: 2
Shelf UID: 50:05:0c:c0:02:00:24:02
Term switch: ON
Shelf state: ONLINE
ESH state:   OK

Disk    Disk    Port     Loop    Invalid   Invalid   Clock   Insert   Stall    Util %
ID      Bay     State    up      CRC       Word      Delta   Count    Count
                         Count   Count     Count
```

```
[IN]            OK        8        0        0        0       20       0        0
[32]    0       OK        10       0        0        0       6        0        0
[33]    1       OK        8        0        0        -8      9        0        0
[34]    2       OK        10       0        0        -8      6        0        0
[35]    3       OK        10       0        0        0       8        0        0
[36]    4       OK        10       0        0        0       9        0        0
[37]    5       OK        10       0        0        -16     7        0        0
[38]    6       OK        10       0        0        0       6        0        0
[39]    7       OK        10       0        0        16      16       0        0
[40]    8       OK        10       0        0        0       8        0        0
[41]    9       BYP/TBI   8        0        0        -8      6        0        0
[42]    10      OK        8        0        0        0       6        0        0
[43]    11      OK        8        0        0        0       15       0        0
[44]    12      EMPTY     8        0        0        8       4        0        0
[45]    13      OK        10       0        0        16      8        0        0
[OUT]           TERM      8        0        0        -8      6        0        0
```

Description of hub status information

You might receive some of the following status reports in response to the `storage show hub` command.

Shelf state: The following table lists and describes the shelf status responses.

Shelf state	Description
ONLINE	Shelf is fully configured and operational.
INIT REQD	Shelf needs to configure one or both ESH modules.
OFFLINE	Contact was lost with shelf (SES drive access is down).
MISSING	Shelf was removed from the system entirely (all paths).
FAILED	Failure occurred on the shelf.

ESH state: The following table lists and describes the ESH status responses.

Shelf state	Description
OK	ESH is fully operational.
MISSING	ESH is missing from the specified slot.
XPORT ERROR	Communication with the ESH is not possible.

Termination (Term) switch state: The following table lists and describes the termination switch status.

Shelf state	Description
OK	Terminal switch is in the Off position. This DS14/DS14mk2 FC is connected to another DS14/DS14mk2 FC in the loop.
TERM	Terminal switch is in the On position. This DS14/DS14mk2 FC is the last shelf in the loop.
TERM-ERR	Forced termination event. The terminal switch is in the On position even though thisDS14/DS14mk2 FC is connected to another DS14/DS14mk2 FC in the loop. The ESH output port LED flashes to indicate this configuration error.
AUTO-TERM	Terminal switch is in the Off position. The output port is no longer connected to another DS14/DS14mk2 FC in the loop, but it once was. The ESH output port LED flashes to indicate this configuration error.

ESH port state: The following table lists and describes the ESH status responses.

Shelf state	Description
OK	Port is functioning normally.
EMPTY	No drive is present in bay.
BYP/TBI	Port failed loop test before insert and was not allowed into loop.
BYP/XMIT	Port bypassed due to transmitter default.
BYP/LIP	Port bypassed due to drive generating LIP F8s.
BYP/DTO	Port bypassed due to data timeout errors.
BYP/RLOS	Port bypassed due to receiver loss of signal.
BYP/CLOS	Port bypassed due to comma loss of signal.
BYP/RPRT	Port bypassed due to redundant port connection.
BYP/STALL	Port bypassed due to excessive stall errors.

Shelf state	Description
BYP/WRD	Port bypassed due to excessive word errors.
BYP/CRC	Port bypassed due to excessive CRC errors.
BYP/CLK	Port bypassed due to excessive clock delta.
BYP/MIR	Port bypassed due to cluster mirror bit being set (check partner).
BYP/LIPF7	Port bypassed due to drive transmitting LIP F7s.
BYP/GEN	Port bypassed due to a “generic” error.
BYP/MAN	Port was manually bypassed (Manufacturing test only).
///:0xXX	ESH Admin unable to decode port state XX.

Hub statistic: The following table lists and describes the hub statistic responses.

Hub statistic	Description	Common values	Failure?
Loop up Count	Number of times this port saw the loop come up or transition to up.	Depends on the number of insertions and removals of disks and LIPs that occur in the loop.	No
Invalid CRC Count	Number of times this port saw a CRC error.	Is zero under normal operation. Removal and addition of disks, and a reset of the adapter, might generate some CRC errors. CRC errors on a port pinpoint the failure location. Excessive CRC errors for a continual time quantum causes the ESH firmware to bypass this port.	Yes, if drive was bypassed.

Hub statistic	Description	Common values	Failure?
Invalid Word Count	Number of times this port saw invalid FC-AL words transmitted.	Is zero under normal operation. Removal and addition of disks, and a reset of the adapter, might generate some word errors. Word errors on a port pinpoint the failure location. Excessive word errors for a continual time quantum causes the ESH firmware to bypass this port.	Yes, if drive was bypassed.
Clock Delta	The clock delta between this port in respect to the ESH's clock and seven other ports.	It is normal for the FC-AL sync clocks to drift with respect to each other. This is a signed drift value. A value exceeding 6,400 PPM causes the ESH firmware to bypass this port.	Yes, if drive was bypassed.
Insert Count	Number of times this port was inserted into the loop.	Depends on the number of insertions and removals of disks and LIPs that occur in the loop.	No
Stall Count	Number of times this port exceeded the open/close (OPN/CLS) maximum threshold.	Is zero under normal operation. Removal and addition of disks, and a reset of the adapter, might generate some stall errors. Excessive stall errors for a continual time quantum causes the ESH firmware to bypass this port.	Yes, if drive was bypassed.
Utilization %	Relative use of this port versus other ports in the ESH.	This value does not reflect the real-time use of what the ports are currently achieving and is only obtained when extended status is available from the ESH. It indicates the relative utilization from the last time extended status was available.	No

Monitoring the power supply

LEDs on the power supply

The power supply has four LEDs. The LEDs indicate whether the power supply or the integrated fan module is functioning normally or there are problems with the hardware. You can also identify any hardware failure associated with the power supplies from the error messages displayed on your storage appliance console.

Location of LEDs

Each power supply, which contains two LEDs, is encased in a device carrier and housed at the rear of the disk shelf. The following illustration shows the location of the power supply LEDs.

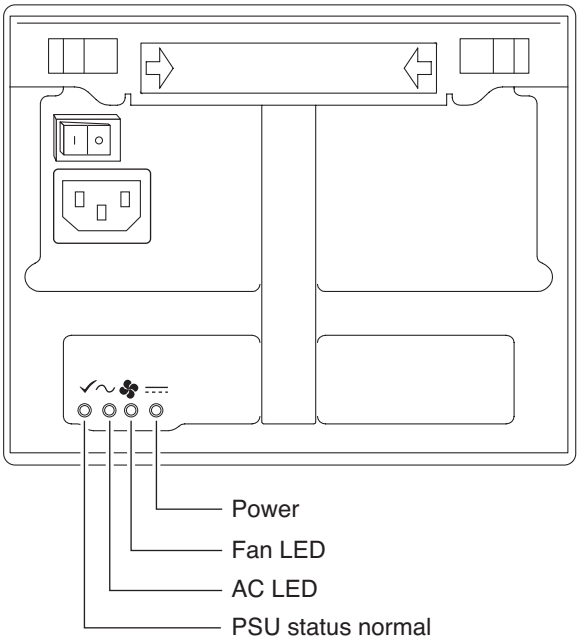

Note

The power LED is green. The other three LEDs are amber. See "LED status on the LRC/ESH" on page 48 for an illustrated explanation of how the LEDs function.

Power supply console error messages

The following error messages appear on your storage appliance console if an SES element on the power supply fails. For information about replacing the power supply, see "Replacing a power supply in a disk shelf" on page 68.

Error message	Action required
`Power supply Element 1: failed`	The power supply unit on the left at the back of the disk shelf failed. Contact Network Appliance customer service to replace the power supply.
`Power supply Element 2: failed`	The power supply unit on the right at the back of the disk shelf failed. Contact Network Appliance customer service to replace the power supply.
`Cooling element Element 1: failed`	The integrated fan module in the power supply unit on the left at the back of the disk shelf failed. Contact Network Appliance customer service to replace the power supply.
`Cooling element Element 2: failed`	The integrated fan module in the power supply unit on the right at the back of the disk shelf failed. Contact Network Appliance customer service to replace the power supply.

Monitoring the Fibre Channel disk

About monitoring the Fibre Channel disk

The Fibre Channel disk has two LEDs. The LEDs indicate whether the disk is functioning normally or there are problems with the hardware.

Location of LEDs

The following illustration shows the Fibre Channel disk, which has two LED indicators on the front.

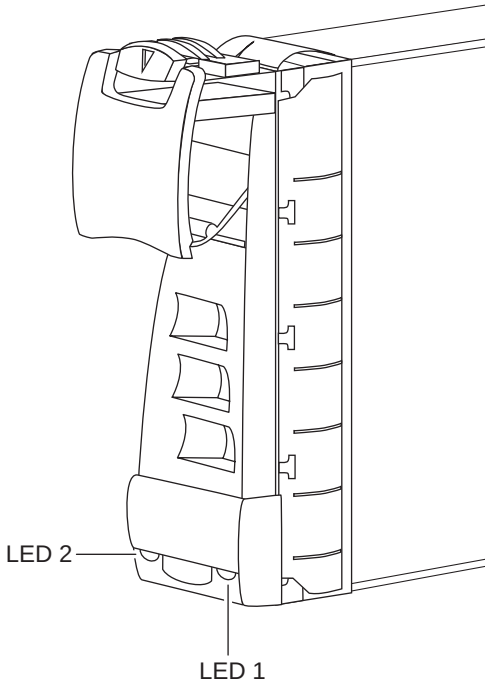

LED status on the Fibre Channel disks

The following illustration is a correction of the third sheet of the quick reference cards that come with your disk shelf.

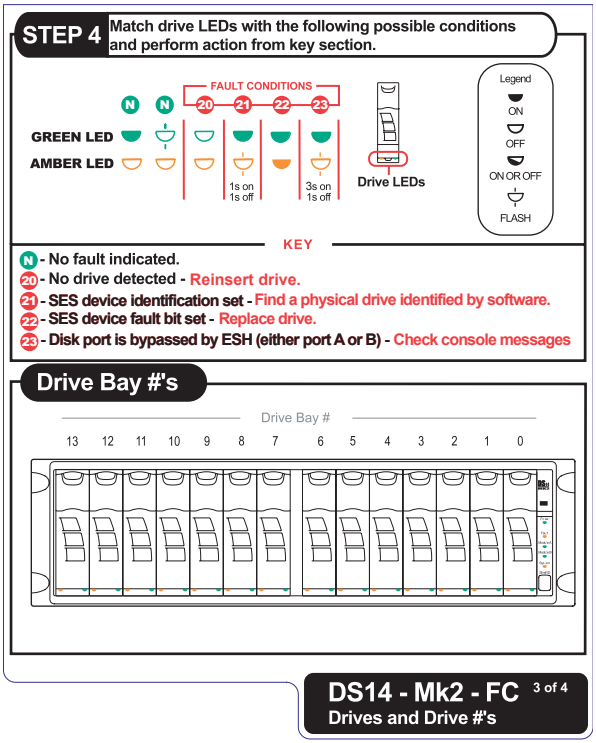

Replacing Disk Shelf Devices 5

About this chapter

This chapter describes how to replace disk shelves in a rack, disks in a disk shelf, and other devices.

Topics in this chapter

This chapter discusses the following topics:

- "Removing a disk shelf" on page 60
- "Replacing a disk in a disk shelf" on page 65
- "Replacing a power supply in a disk shelf" on page 68
- "Replacing an LRC/ESH" on page 72

Removing a disk shelf

About this section

This section discusses how to disconnect a disk shelf from a storage appliance and how to remove a disk shelf from a daisy-chain configuration. It does not discuss how to install a disk shelf or how to hot-add a disk shelf. For information about installing a disk shelf in a rack, see "Installing a disk shelf in a rack" on page 18. For information about hot-adding a disk-shelf, see Appendix A, "Hot-adding a DS14/DS14mk2 FC to an existing loop," on page 89.

Caution

Hot removal or hot-swapping of a disk shelf is not supported.

For detailed information

For detailed information about removing a disk shelf from a rack, see the following topics:

- "Removing a disk shelf from a single disk shelf configuration" on page 61
- "Removing a disk shelf from a loop" on page 63

Removing a disk shelf from a single disk shelf configuration

Removing a disk shelf

To remove a disk shelf from a single disk shelf configuration, complete the following steps.

Step	Action	
1	Put on the antistatic wrist strap and grounding leash.	
2	**If the disk shelf connects to a...**	**Then...**
	Filer/FAS appliance	Shut down the filer/FAS appliance by entering the following command at the console: `halt` **Caution** Always use the `halt` command to perform a clean shutdown.
	NetCache appliance	**1.** From the NetCache Manager home page, select Maintenance tab > System Control > Halt/Reboot. **2.** Select Halt NetCache.
3	Verify that the LCD display at the front of your storage appliance displays the following message: `Halted`	
4	**If the disk shelf has...**	**Then...**
	AC power supplies	Turn off the power switch on the disk shelf.
	DC power supplies	Turn off and unplug the cables from the power source.

Step	Action
5	Disconnect the two disk shelf power cords from the disk shelf.
6	Disconnect the Fibre Channel cable connecting the disk shelf and storage appliance.
7	Disconnect the grounding strap connecting the disk shelf and storage appliance.
8	Use a Phillips screwdriver to remove the screws securing the disk shelf to the telco tray, the center-of-gravity bracket, or the four-post rack.
9	With the help of another person, remove the disk shelf from the rack. **WARNING** **The disk shelf is very heavy when fully loaded and requires at least two people to remove it.**

Removing a disk shelf from a loop

Removing a daisy-chained disk shelf

To remove a disk shelf from a loop of disk shelves, complete the following steps.

Step	Action	
1	Put on the antistatic wrist strap and grounding leash.	
2	**If the disk shelf connects to a...**	**Then...**
	Filer/FAS appliance	Shut down the filer/FAS appliance by entering the following command at the console: `halt` **Caution** Always use the `halt` command to perform a clean shutdown.
	NetCache appliance	**1.** From the NetCache Manager home page, select Maintenance tab > System Control > Halt/Reboot. **2.** Select Halt NetCache.
3	Verify that the LCD display at the front of your storage appliance displays the following message: `Halted`	
4	**If the disk shelf has...**	**Then...**
	AC power supplies	Turn off the power switch on the disk shelf.
	DC power supplies	Turn off and unplug the cables from the power source.

Step	Action	
5	Disconnect the two disk shelf power cords from the disk shelf that you are going to remove.	
6	Disconnect the Fibre Channel cables connecting the disk shelf to the other disk shelves or the storage appliance.	
7	Disconnect the grounding strap connecting the disk shelf to the other disk shelves or the storage appliance.	
8	Use a Phillips screwdriver to remove the screws from the flanges of the disk shelf retention bracket.	
9	With the help of another person, remove the disk shelf from the rack. **WARNING** **Because the disk shelf is very heavy when fully loaded, it is advised that at least two people remove the disk shelf.**	
10	**If you are...**	**Then...**
	Not installing a replacement disk shelf	**1.** Reestablish the loop by connecting the disconnected disk shelves or by connecting the unconnected disk shelf to the storage appliance. **2.** Set the termination switch on Channel A (down) and Channel B (up) to the On position.
	Installing replacement disk shelf	See “Installing a disk shelf in a rack” on page 18.

Replacing a disk in a disk shelf

Reasons to replace a disk

You can replace a disk in a disk shelf for any reason. However, the most common reason is disk failure. If a disk fails, the storage appliance logs a warning message to the system console indicating which disk on which loop failed.

In addition, a disk shelf with an ESH module identifies any one of the following situations as disk failure:

- A disk is bypassed
- The filer system boots with the presence of bypassed disks
- The filer system detects an eminent threshold bypass

The following autosupport warning message is then sent:

```
DISK FAIL!! - Bypassed by ESH
```

Preparing to replace a disk

Before you replace a disk in a disk shelf, you must first check the disk shelf to ensure that after you remove the disk you still have enough disks installed to meet the enclosure services requirements. For information about these requirements, see "Drive bay requirements" on page 16.

About replacing a disk in a disk shelf

Replacing a disk in a disk shelf consists of the following procedures:

- "Removing a disk" on page 65
- "Installing a disk" on page 67

Removing a disk

To remove a disk, complete the following steps.

Step	Action	
1	**If the disk shelf connects to a...**	**Then...**
	Filer/FAS appliance	If you are removing disk that is a member of a volume, enter: **`disk fail`** ***`disk_name`***

Step	Action	
		If you are removing disk that is a spare disk, enter: **`disk remove disk_name`** Either command causes the amber fault LED on the disk to illuminate. For more information about LEDs, see "Monitoring the Fibre Channel disk" on page 57. For more information about disk commands, see the Data ONTAP *System Administrator's Guide*.
	NetCache appliance	**1.** In the NetCache Manager utility, select Maintenance tab > Disk > Management. **2.** From the Disk Type column of the Disk Status table, identify the disk that you want to remove. **3.** Click Fail. **4.** Click Swap Drive. For more information about disk management, see the *NetCache Appliance System Administration Guide*.
2	Wait 30 seconds for the disk to stop spinning.	
3	Put on the antistatic wrist strap and grounding leash.	

Step	Action
4	To remove the disk, press down on its release mechanism with one hand while grasping the top flange of the disk shelf with the other hand. Gently slide the disk out of the disk shelf. **WARNING** **When removing a disk, always use two hands to support its weight.**

Installing a disk

To install a disk in a disk shelf, complete the following steps.

Step	Action
1	Put on the antistatic wrist strap and grounding leash.
2	Orient the device carrier so that the release mechanism is at the top.
3	Insert the device carrier into the guide slot in the disk shelf and firmly push it in until it engages the backplane and you see the release mechanism click into place. **Note** If the device carrier does not fully seat in the drive bay, you may be trying to install a DS14 device carrier into a DS14mk2 FC disk shelf. **Caution** Do not slam the device carrier into place.
4	Make sure that disks are installed in drive bays 0 and 1 for Enclosure Services to work.

Replacing a power supply in a disk shelf

About this section

Replacing a power supply in a disk shelf consists of the following procedures:

- "Removing a power supply" on page 68
- "Installing a power supply" on page 70

Rules for replacing power supplies

When replacing the power supply on your disk shelf, observe the following rules:

- You do not need to turn off the power when you replace one power supply.
- If you are replacing both power supplies in the same disk shelf, replace them one at a time to avoid powering down the disk shelf.

Removing a power supply

To remove a power supply, complete the following steps.

Step	Action	
1	Put on the antistatic wrist strap and grounding leash.	
2	**If you have a disk shelf with...**	**Then...**
	An AC power supply	**1.** Turn off the switch on the power supply that you are replacing. **2.** Lift up the clip lock and unplug the power cord from the storage appliance power supply.
	A DC power supply	**1.** Turn off and unplug the cable to the power supply you are replacing from the power source. **2.** Using a #2 Phillips screwdriver, remove and save the screws securing the connections to the power supply in the following order: ❖ For positive ground installations: first negative (–), then positive (+), then ground (⏚) ❖ For negative ground installations: first positive (+), then negative (–), then ground (⏚)

Step	Action	
3	**If the CAM mechanism on the power supply is...**	**Then...**
	In the middle of the rear of the unit	Using the thumb and index finger of both hands, press the CAM mechanism levers in the middle of the power supply to release it.

The following figure shows how to release the CAM mechanism.

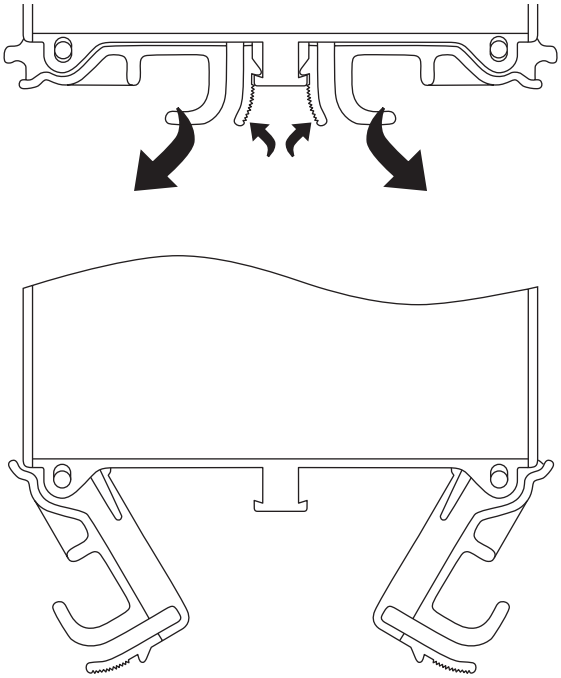

	At the top of the rear of the unit	Using your thumb and index finger, press the CAM mechanism levers toward each other to release the power supply handle.

The following figure shows how to press the levers on the CAM mechanism and release the power supply handle.

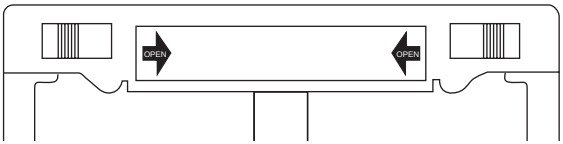

Step	Action
4	Use the handle to pull the power supply out of the disk shelf. **WARNING** **When removing a power supply, always use two hands to support its weight.**

Installing a power supply

To install a power supply in a disk shelf, complete the following steps.

Caution
Do not use excessive force when sliding the power supply into the disk shelf. You can damage the connector.

Step	Action	
1	Put on the antistatic wrist strap and grounding leash.	
2	**If the power supply CAM mechanism is...**	**Then slide the power supply in the power supply bay...**
	In the middle of the rear of the unit	And push the CAM mechanism levers into place.
	At the top of the rear of the unit	**1.** Until you hear the power supply connect with the connector inside the disk shelf chassis. **2.** Raise the handle and push it into place. **3.** Using your thumb and index finger, press the CAM mechanism levers toward each other to engage the power supply into place.

Step	Action	
	The following figure shows how to raise the handle into place. 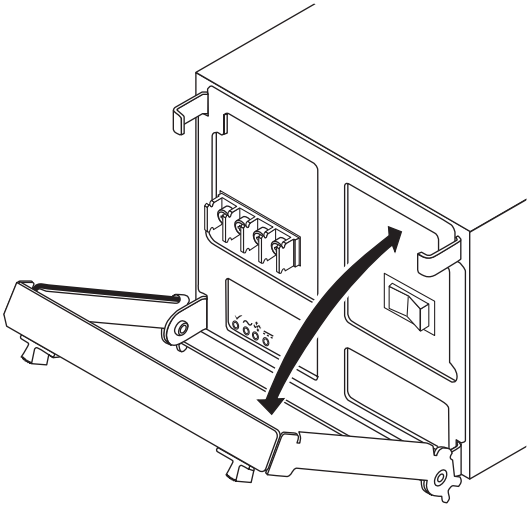	
3	**If the disk shelf has...**	**Then...**
	An AC power supply	**1.** Plug the power cord into the power receptacle and fasten it with the clamp. **2.** Plug the other end of the power cord into a grounded AC power source.
	A DC power supply	**1.** Connect the positive, negative, and ground wires to the power supply. **2.** Plug the other end of each power cord into a power source.
4	Turn on the power switch.	

Replacing an LRC/ESH

About the LRC/ESH

The LRC/ESH in a DS14/DS14mk2 FC includes a SCSI-3 Enclosure Services Processor. It maintains the integrity of the loop when disks are swapped and provides signal retiming for enhanced loop stability. There are two LRC/ESHs in the middle of the rear of the disk shelf, one for Channel A and one for Channel B.

Note

The Input and Output ports on LRC/ESH B on the DS14/DS14mk2 FC are inverted from LRC/ESH A.

Connectors in an LRC/ESH: The LRC/ESH has the following connectors.

LRC/ESH connector	Function
Input	Provides the interface between the disk shelf and the storage appliance.
Output	Provides the interface between two disk shelves to create a loop of daisy-chained disk shelves.

For detailed information

This section provides information about the following topics:

- "Removing an LRC/ESH" on page 73
- "Installing an LRC/ESH" on page 75
- "Hot-swapping an LRC/ESH" on page 76
- "Hot-upgrading or hot-downgrading a disk shelf" on page 78

Removing an LRC/ESH

Removing an LRC/ESH

To remove an LRC/ESH connected to the Fibre Channel loop, complete the following steps.

Step	Action	
1	Put on the antistatic wrist strap and grounding leash.	
2	**If the disk shelf connects to a...**	**Then...**
	Filer/FAS appliance	Shut down the filer/FAS appliance by entering the following command at the console: `halt` **Caution** Always use the `halt` command to perform a clean shutdown.
	NetCache appliance	**1.** From the NetCache Manager home page, select the Maintenance tab > System Control > Halt/Reboot. **2.** Select Halt NetCache.
3	Verify that the LCD display at the front of your storage appliance displays the following message: `Halted`	

Step	Action	
4	**If the disk shelf has...**	**Then...**
	AC power supplies	Turn off the power switch on the storage appliance and disk shelves.
	DC power supplies	Turn off and unplug the cables from the power source.
5	Disconnect the LRC/ESH from the Fibre Channel cabling.	
6	Using the thumb and index finger of both hands, press the levers on the CAM mechanism on the LRC/ESH to release it.	
7	Pull the LRC/ESH out of the disk shelf.	
8	Go to “Installing an LRC/ESH” on page 75.	

Installing an LRC/ESH

Installing an LRC/ESH

To install an LRC/ESH, complete the following steps.

Step	Action
1	Put on the antistatic wrist strap and grounding leash.
2	Make sure that the power is off.
3	Push apart the levers on the CAM mechanism and slide the LRC/ESH into the slot at the rear of the disk shelf and push the levers of the CAM mechanism into place. **Caution** Do not use excessive force when sliding the LRC/ESH into the disk shelf; you might damage the connector.
4	Reconnect the Fibre Channel cabling.
5	Turn on the power to the disk shelves.
6	Reboot the storage appliance.

Hot-swapping an LRC/ESH

Assumptions about this procedure

The assumptions about this procedure are that LRCs or ESHs on the disk shelf are multipath connections to the storage appliance and that you are hot-swapping an LRC with another LRC or that you are hot-swapping an ESH with an ESH.

For hot-upgrading or hot-downgrading these devices, see "Hot-upgrading or hot-downgrading a disk shelf" on page 78.

Caution

If you attempt to hot-swap the LRC/ESH on a disk shelf that does not have multipath connections, you lose all access to the drives on this disk shelf as well as those below it.

Hot-swapping an LRC/ESH

To hot-swap an LRC/ESH, complete the following steps.

Caution

To hot-swap an LRC/ESH on a disk shelf that is in a cluster, see the Cluster Guide for your filer.

Step	Action
1	Put on the antistatic wrist strap and grounding leash.
2	From the console of the storage appliance, enter the following command to disable the loop in which the failed LRC/ESH is a connection: `storage disable adapter adaptername` The *Data ONTAP System Administrator's Guide* (6.1 or later) provides more information about these commands.
3	Note the position of the termination switch on the LRC/ESH you are removing and set the termination switch on the replacement LRC/ESH to the same setting before inserting it into the disk shelf.
4	Disconnect the LRC/ESH that you are removing from the Fibre Channel cabling.

Step	Action
5	Using the thumb and index finger of both hands, press the levers on the CAM mechanism on the LRC/ESH to release it and pull it out of the disk shelf.
6	Slide the replacement LRC/ESH into the slot at the rear of the disk shelf and push the levers of the CAM mechanism into place. **Caution** Do not use excessive force when sliding the LRC/ESH into the disk shelf; you might damage the connector.
7	Reconnect the Fibre Channel cabling.
8	From the console of the filer, enter the following command to enable the loop in which the replacement LRC/ESH is a connection: `storage enable adapter adaptername`

Hot-upgrading or hot-downgrading a disk shelf

When you can hot-upgrade or hot-downgrade

You can hot-upgrade a disk shelf with an LRC into a disk shelf with an ESH or hot-downgrade the disk shelf with an ESH into a disk shelf with an LRC, if your filer system incorporates redundancy through multipathing.

Requirements for hot-upgrading or hot-downgrading

To hot-upgrade a disk shelf with an LRC into a disk shelf with an ESH or hot-downgrade the disk shelf with an ESH into a disk shelf with an LRC, the following requirements must be met.

Caution

You must hot-upgrade or hot-downgrade all disk shelves in the loop.

Disk shelf loop speed	Hot-upgrade	Hot-downgrade
DS14 (only available at 1-Gb loop speed)	LRC to ESH hot-upgrade is supported.	ESH to LRC hot-downgrade is supported.
DS14mk2 FC set at 1-Gb loop speed	LRC to ESH hot-upgrade is supported.	ESH to LRC hot-downgrade is supported.
DS14mk2 FC set at 2-Gb loop speed	Not applicable.	ESH to LRC hot-downgrade is not supported.

Hot-upgrading or hot-downgrading a disk shelf

To hot-upgrade or hot-downgrade a disk shelf, complete the following steps.

Caution

To hot-upgrade or hot-downgrade a disk shelf that is in a cluster, see the Cluster Guide for your filer.

Step	Action
1	Put on the antistatic wrist strap and grounding leash.

Step	Action	
2	From the console of the filer, enter the following command to disable all the LRCs or ESHs in Loop A: `storage disable adapter adaptername`	
3	**If you are...**	**Then...**
	Hot-upgrading the disk shelf	Note the position of the termination switch on the LRC you are removing and set the termination switch on the ESH to the same setting before inserting it into the disk shelf.
	Hot-downgrading the disk shelf	Note the position of the termination switch on the ESH you are removing and set the termination switch on the LRC to the same setting before inserting it into the disk shelf.
4	Disconnect the LRC/ESH from the Fibre Channel cabling and remove the cabling.	
5	Using the thumb and index finger of both hands, press the levers on the CAM mechanism on the LRC/ESH to release it and pull it out of the disk shelf.	
6	**If you are...**	**Then...**
	Hot-upgrading the disk shelf	Slide the ESH into the slot at the rear of the disk shelf and push the levers of the CAM mechanism into place. **Caution** Do not use excessive force when sliding the ESH into the disk shelf; you might damage the connector.

Step	Action	
	Hot-downgrading the disk shelf	Slide the LRC into the slot at the rear of the disk shelf and push the levers of the CAM mechanism into place. **Caution** Do not use excessive force when sliding the LRC into the disk shelf; you might damage the connector.
7	**If you are...**	**Then...**
	Hot-upgrading a disk shelf	Reconnect the Fibre Channel cabling by using LC to LC cables when connecting to optical FC-AL adapters and HSSDC2 to HSSDC2 cables for connections between shelves.
	Hot-downgrading a disk shelf	Reconnect the Fibre Channel cabling by using HSSDC to DB-9 cables when connecting to copper FC-AL adapters or SC to LC cables when connecting to optical FC-AL adapters, and DB-9 to DB-9 cables for connections between shelves.
8	Repeat Step 2 through Step 7 for the remaining LRCs/ESHs in the loop.	

Step	Action
9	From the console of the filer, enter the following command to verify that the LRCs/ESHs in Loop A report good status: **`environ shelf`** As long as only the LRCs A are upgraded, you also receive the following error message: `Element 1: component is from a different product family. This is an unsupported configuration.` **Note** Both modules in the disk shelf must either be LRCs or ESHs. A mixed module configuration is supported during the hot-swap procedure, but it is not a supported configuration for long-term operation.
10	From the console of the filer, enter the following command to enable the Loop A: **`storage enable adapter`** ***`adaptername`***
11	Repeat Step 1 through Step 10 for Loop B.

Adding a Disk Shelf to an Existing System A

About this appendix

This appendix discusses how to install a DS14/DS14mk2 FC into an existing system.

Topics in this appendix

This appendix discusses the following topics:

- "Installing a disk shelf in an existing mixed-shelf loop" on page 84
- "Hot-adding a DS14/DS14mk2 FC to an existing loop" on page 89

Installing a disk shelf in an existing mixed-shelf loop

Assumptions about the existing mixed-shelf loop

This section is based on the assumption that the last disk shelf in the existing mixed shelf loop connected to your storage appliance is not a DS14/DS14mk2 FC disk shelf.

Note

If the last disk shelf in your storage appliance system is a DS14/DS14mk2 FC, you can add the disk shelf to the loop without shutting down the system. Go to "Hot-adding a DS14/DS14mk2 FC to an existing loop" on page 89.

Caution

Do not attempt to add a DS14/DS14mk2 FC that has ESH modules to a mixed shelf loop.

Installing the disk shelf

To install a DS14/DS14mk2 FC disk shelf into an existing mixed-shelf loop on a storage appliance, complete the following steps.

Caution

If you are installing the DS14/DS14mk2 FC into a loop that contains FC7, FC8, or FC9 disk shelves, the DS14/DS14mk2 FC must be the last disk shelf in the loop and must have the highest disk shelf ID in the loop to avoid address conflicts.

Step	Action	
1	Put on the antistatic wrist strap and grounding leash.	
2	**If the disk shelf connects to a...**	**Then...**
	Filer/FAS appliance	Shut down the filer/FAS appliance by entering the following command at the console: `halt` **Caution** Always use the `halt` command to perform a clean shutdown.

Step	Action	
	NetCache appliance	**1.** From the NetCache Manager home page, select Maintenance tab > System Control > Halt/Reboot. **2.** Select Halt NetCache.
3	Verify that the LCD display at the front of your storage appliance displays the following message: `Halted`	
4	Turn off the power to your storage appliance and the disk shelves.	
5	Install the disk shelf. Follow Step 2 through Step 7 of "Installing a disk shelf" on page 18.	
6	Ground the disk shelf using the provided grounding cable. Follow Step 4 and Step 5 of "Grounding connected disk shelves" on page 39.	
7	Connect the disk shelf to a power source. Follow Step 2 of "Connecting the disk shelf to power" on page 41.	
8	**If the last disk shelf in the loop is...**	**Then...**
	An FC7 or FC8 disk shelf	**1.** Remove the terminator from the Output/Terminator connector. **2.** Go to Step 9.
	An FC9 disk shelf	Go to Step 9.
9	Connect one end of the provided cable to the Output/Terminator connector of the LRC A on the last disk shelf in the loop.	

Step	Action	
10	Connect the other end of the cable to the LRC A Input on the disk shelf that you are adding. The following illustration shows a DS14 disk shelf installed above an FC9 disk shelf. 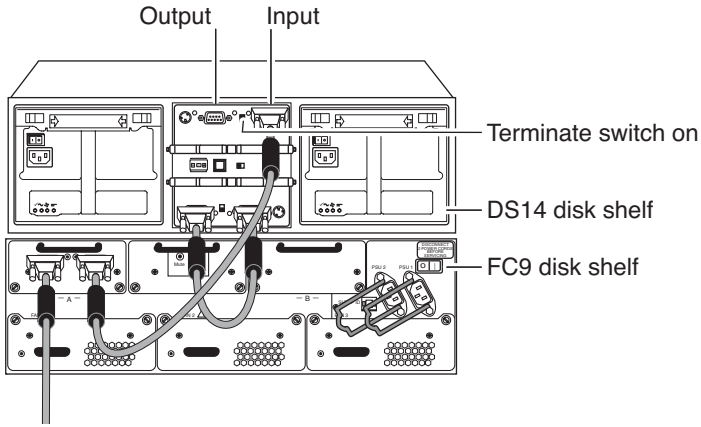 	
11	**If the DS14/DS14mk2 FC...**	**Then...**
	Is the only disk shelf being added to the loop	**1.** Connect one end of the provided cable to the LRC B Input on the disk shelf. **2.** Connect the other end of the cable to the LRC B Output on the disk shelf. **3.** Turn the termination switches on LRCs A and B to the On position. 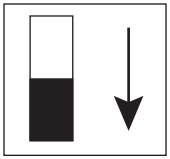 LRC A active terminate position

Step	Action	
		Note Because LRC B on the disk shelf is inverted, the On termination position on LRC B is up instead of down.
	Is the first of additional DS14/DS14mk2 FC disk shelves being added to the loop	**1.** Turn the termination switch on the first disk shelf in the mixed-shelf loop to the Off position for LRC A (up) and LRC B (down). **2.** Connect one end of the provided cable to the LRC B Output on the first disk shelf in the mixed-shelf loop. **3.** Connect the other end of the cable to the LRC B Input on the next disk shelf that you added to the mixed-shelf loop. **4.** Verify that the termination switch on all but the last disk shelf is in the Off position for LRC A (up) and LRC B (down). The termination switch on the last disk shelf should be in the On position for LRC A (down) and LRC B (up).
12	Give the disk shelf a unique disk shelf ID. See Step 5 of "Installing a disk shelf" on page 18 for specific instructions. **Note** A valid shelf ID is between 1 through 7. Only use disk shelf ID 7 if it is the last ID available on this loop. A shelf ID that is not from 1 through 7 causes the drive addresses to default to those of a shelf with the ID switch set to 7, even though the Shelf ID indicator in the front operation panel displays a dash (-).	

Step	Action	
13	**If your disk shelf is a...**	**Then**
	DS14	Go to Step 14.
	DS14mk2 FC with an LRC module	Set the loop speed switch to 1 Gb. **Caution** An incorrectly set loop speed results in an open loop condition.
14	Turn on the power first to the disk shelves and then to the storage appliance.	
15	Reboot the storage appliance.	

Hot-adding a DS14/DS14mk2 FC to an existing loop

About this section

This section provides information about how to hot-add a DS14/DS14mk2 FC to an existing loop. It also tabulates the error messages that appear on your storage appliance console if the attempt at hot-adding was unsuccessful.

Note

The hot-added disk shelf must have new drives that will be used as spares only.

Requirements for hot-adding

To hot-add a DS14/DS14mk2 FC to an existing loop, the following requirements must be met.

If the disk shelf being hot-added...	Then...
Has LRCs	◆ The disk shelves in the existing loop must have a DS14/DS14mk2 FC disk shelf with LRCs as the last shelf. ◆ You must follow the procedure "Hot-adding a disk shelf to an existing loop" on page 90 exactly, if you are hot-adding to a mixed shelf loop. **Caution** Failure to follow the procedure exactly causes the last FC9 in the loop to automatically terminate the loop. The storage appliance loses contact with the existing last DS14/DS14mk2 FC in the loop and crashes.
Has ESHs	The disk shelves in the existing loop must have only DS14/DS14mk2 FC disk shelves with ESHs in the loop.

Hot-adding a disk shelf to an existing loop

To hot-add a disk shelf to an existing loop, complete the following steps.

Caution

To hot-add disk shelves to a cluster, see the cluster guide for your filer.

Step	Action
1	Put on the antistatic wrist strap and grounding leash.
2	Install the disk shelf. Follow Step 2 through Step 7 of "Installing a disk shelf" on page 18.
3	Ground the disk shelf using the provided grounding cable. Follow Step 4 and Step 5 of "Grounding connected disk shelves" on page 39.
4	Connect the disk shelf to a power source by following Step 2 of "Connecting the disk shelf to power" on page 41. **Caution** Do not turn on the power to the disk shelf yet.
5	Give the disk shelf a unique disk shelf ID. See Step 5 of "Installing a disk shelf" on page 18 for specific instructions. **Note** Only use disk shelf ID 7 if it is the last ID available.
6	Verify that the disk shelf ID is not being used in the loop by entering the following command at the console: `fcstat device_map adaptername` **Caution** An invalid disk shelf ID causes the storage appliance to panic.

Step	Action	
7	**If disk shelves in the loop have...**	**Then, for loops with...**
	LRCs	◆ DS14 only: Go to Step 8. ◆ A mix of DS14 and DS14mk2 FC: Set the loop speed to 1 Gb. **Caution** An incorrectly set loop speed results in an open loop condition.
	ESHs	◆ DS14 only or a mix of DS14 and DS14mk2 FC: Set the loop speed to 1 Gb. ◆ DS14mk2 FC only that are running at 1 Gb: Set the loop speed to 1 Gb. ◆ DS14mk2 FC only that are running at 2 Gb: Set the loop speed to 2 Gb. **Caution** An incorrectly set loop speed causes the storage appliance to panic.
8	Turn on the power to the disk shelf. **Caution** You must power up the new disk shelf before you connect it to the last disk shelf in the loop because there must be approximately a 120-second time difference between Step 8 (powering on the disk shelf) and Step 15 (turning off the terminate switch) of this procedure.	
9	Connect one end of the provided cable to the LRC/ESH A Output on the last disk shelf in the existing loop.	
10	Connect the other end of the cable to the LRC/ESH A Input on the new disk shelf.	
11	Connect one end of the provided cable to the LRC/ESH B Output on the last disk shelf in the existing loop.	

Step	Action
12	Connect the other end of the cable to the LRC/ESH B Input on the new disk shelf.
13	Verify that all the cables are securely fastened. **Caution** Poorly secured cables cause the storage appliance to panic over an open loop.
14	Turn the termination switch of the newly added disk shelf to the On position for LRC/ESH A (down) and LRC/ESH B (up). **Caution** Failure to place the termination switches in the On position causes the storage appliance to panic over an open loop.
15	Turn the termination switch of the now second-to-last disk shelf to the Off position for LRC/ESH A (up) and LRC/ESH B (down). **Result:** In 60 seconds, the storage appliance recognizes the hot-added disk shelf.

Error messages

The following error messages appear on your storage appliance console if your attempt at hot-adding the DS14/DS14mk2 FC is unsuccessful.

Error message	Explanation
`Open loop panic`	One of three reasons cause this error message to appear: ◆ The terminate switch on LRC/ESH A and LRC/ESH B on the new disk shelf are not in the On position. ◆ The shelf-to-shelf cable between the now second-to-last disk shelf and the newly added disk shelf is defective or is not securely fastened. ◆ The speed of the newly added DS14mk2 FC disk shelf is incorrectly set.

Error message	Explanation
`Soft address panic`	One of two reasons cause this error message to appear: ◆ There is an invalid disk shelf ID. ◆ The power was turned on before the disk shelf ID was changed and the disk shelf was not power-cycled after the disk shelf ID was changed.
`Speed mismatch termination` (From disk shelves with ESHs only)	The ESH modules on the disk shelf detected a speed mismatch between the preceding disk shelf and this disk shelf and is reporting them as automatic termination errors.

Recommended Power Line Sizes

B

About this appendix

This appendix describes how to determine the power line lengths running from the storage appliance to the power source.

Topics in this appendix

This appendix discusses the following information:

- "Recommended AC power line sizes" on page 96
- "Calculating the length of DC wires" on page 97

Recommended AC power line sizes

About AC power feeds

Longer AC power feeds need to be properly designed to preserve voltage levels to the equipment. The wiring from the breaker panel to the power strip, which supplies power to the storage appliance and disk shelves, can often exceed 50 feet.

Note

Total AC wire length = breaker to wall or ceiling outlet + extension cable or ceiling drop.

The following table lists the recommended conductor size for 2% voltage drop for a particular distance in feet (taken from the Radio Engineer's Handbook).

110V, single-phase	**20A circuit**	**30A circuit**	**40A circuit**	**50A circuit**
25 feet	12 AWG	10 AWG	8 AWG	8 AWG
50 feet	8 AWG	6 AWG	6 AWG	4 AWG
75 feet	6 AWG	4 AWG	4 AWG	2 AWG

220V, single-phase	**20A circuit**	**30A circuit**	**40A circuit**	**50A circuit**
25 feet	14 AWG	12 AWG	12 AWG	10 AWG
50 feet	12 AWG	10 AWG	8 AWG	8 AWG
75 feet	10 AWG	8 AWG	6 AWG	6 AWG

The following table list the approximate equivalent wire gauge (American Wire Gauge (AWG) to Harmonized Cordage).

AWG	8	10	12
Harmonized, mm-mm[1]	4.0	2.5	1.5

1. mm-mm = millimeter squared

Calculating the length of DC wires

Use these variable definitions

To calculate the maximum combined length of the positive and negative wires between the DC source and DC power supplies, use the following variable definitions:

- V_{SOURCE} — Voltage across the internal source resistance
- V_{OC} — Voltage across an open circuit of the input source
- V_{LOAD} — Voltage across a load, R_{TEST}, connected to the input source
- R_{TEST} — Test resistor of known value, that is, 10Ω at 300W
- R_{CABLE} — DC resistance of the cable at a given length
- R_{SOURCE} — DC resistance of the source
- R_{TOTAL} — Combined DC resistance of the cable and DC source:

  $$R_{TOTAL} = R_{SOURCE} + R_{CABLE}$$
- $V = IR$ — Ohm's Law
- $V_{OC} = V_{SOURCE} + V_{LOAD}$ — Kirchoff's Voltage Law

How to calculate the length

The following two examples show how to calculate the maximum combined length of the positive and negative wires that connect the DC power supply to the DC source.

Example 1: This example uses the following given values.

Given

V_{DROP}	=	2V	Maximum voltage drop through input source and cable
V_{MIN}	=	40V	Minimum input voltage
I_{MAX}	=	8.6V	Maximum input current at 40V
V_{OC}	=	48V	Measured
V_{LOAD}	=	47.5V	Measured
R_{TEST}	=	10Ω	(300W)

Solution

$$V_{DROP} = I_{MAX}R_{TOTAL}$$

$$2 = 8.6\ R_{TOTAL}$$

$$R_{TOTAL} = 2/8.6$$

$$R_{TOTAL} = .233\Omega$$

$$V_{LOAD} = I\ \ R_{TEST}$$

$$I = V_{LOAD}/R_{TEST}$$

$$V_{OC} = V_{SOURCE} + V_{LOAD}$$

$$V_{OC} = IR_S + V_{LOAD}$$

$$R_S = \frac{V_{OC} - V_{LOAD}}{I}$$

$$R_S = \frac{(V_{OC} - V_{LOAD})}{V_{LOAD}/R_{TEST}}$$

$$R_S = \frac{V_{OC} - V_{LOAD}}{V_{LOAD}} \times R_{TEST}$$

$$= \frac{48V - 47.5V}{47.5V} \times 10\Omega$$

$$= 0.105\Omega$$

$$R_{TOTAL} = R_{CABLE} + R_{SOURCE}$$

$$R_{CABLE} = R_{TOTAL} - R_{SOURCE}$$

$$R_{CABLE} = 0.233\Omega - 0.105\Omega$$

$$= 0.128\Omega$$

For example, if you have a 12 gauge wire, solid strand, at room temperature, use the following calculation.

$$\text{Total cable length} = \frac{R_{CABLE}}{\text{DC resis.}^{1}}$$

$$\text{Total cable length} = \frac{.128\Omega}{.0017\Omega/\text{ft}} = 75 \text{ ft}$$

AWG	Strand	DC resistance[1] [Ω/ft.]		Total cable length[2] [ft]	
		25° C	75° C	25° C	75° C
12	Solid	.0017	.0020	75	64
12	7/20	.0015	.0018	85	71
12	19/25	.0017	.0020	75	64
12	65/30	.0018	.0022	71	58
12	165/34	.0016	.0019	80	67

1. Data from Alpha Wire, wire manufacturer
2. Combined positive and negative run

Example 2: This example uses the following given values.

Given

V_{DROP} = 2V — Maximum voltage drop through input source and cable

V_{MIN} = 40V — Minimum input voltage

I_{MAX} = 8.6V — Maximum input current at 40V

$R_{SOURCE} \cong 0$

Solution

$$V_{DROP} = I_{MAX}R_{TOTAL}$$

$$R_{TOTAL} = \frac{V_{DROP}}{I_{MAX}}$$

$$R_{TOTAL} = 2/8.6$$

$$R_{TOTAL} = 0.233\Omega$$

$$R_{TOTAL} = R_{SOURCE} + R_{CABLE}$$

$$R_{CABLE} = R_{TOTAL} - R_{SOURCE}$$

$$R_{CABLE} = 0.233 - 0$$

$$R_{CABLE} = 0.233$$

For example, if you have a solid strand 12 gauge wire at room temperature, use the following calculation.

$$\text{Total cable length} = \frac{R_{CABLE}}{\text{DC resis.}^{1}}$$

$$\text{Total cable length} = \frac{.233\Omega}{.0017\Omega/\text{ft}} = 136 \text{ ft}$$

AWG	Strand	DC resistance[1] [Ω/ft.]		Total cable length[2] [ft]	
		25° C	75° C	25° C	75° C
12	Solid	.0017	.0020	136	116
12	7/20	.0015	.0018	155	129
12	19/25	.0017	.0020	136	116
12	65/30	.0018	.0022	129	105
12	165/34	.0016	.0019	145	122

1. Data from Alpha Wire, wire manufacturer.
2. Combined positive and negative run

About using other wire sizes

If you need a longer run for your combined positive and negative DC wires, choose a wire with a lower resistance and calculate the total cable length. For example, a solid #10 AWG has a lower DC resistance than a solid #12 AWG.

Communications Regulations C

About this appendix This appendix lists the regulatory notices you need to be aware of when installing and operating your Network Appliance equipment.

Regulatory notices

FCC notices (U.S. only)

Network Appliance devices are designed for a CFR 47 (Code Federal Regulations) Part 15 Class A environment.

The FCC and Network Appliance guarantee the user's rights to operate this equipment only if the user complies with the following rules and regulations:

- Install and operate this equipment in accordance with the specifications and instructions in this guide.
- Modify this equipment only in the ways specified by Network Appliance.
- Use shielded cables with metallic RFI/EMI connector hoods to maintain compliance with applicable emissions standards.
- If the system has nine or more Fibre Channel disk shelves, install the system in two or three NetApp System Cabinets to maintain performance within Part 15 of CFR 47 regulations.

Compliance with Part 15 of CFR 47

This equipment has been tested and found compliant with Part 15 of the CFR 47 rules for Class A digital devices. These rules are designed to provide reasonable protection from interference to electronics equipment operated in a commercial environment.

Operation of this device is subject to the following two conditions:

- This device cannot cause harmful interference.
- This device must accept any interference received, including interference that may cause undesired operation.

Compliance with ICES-003

This Class A digital apparatus complies with Canadian ICES-003.

Cet appareil numérique de la classe A conforme à la norme NMB-003 du Canada.

Compliance with EN regulations

Marking by the symbol CE indicates compliance of this Network Appliance device to the EMC Directive and the Low Voltage Directive of the European Union. Such marking is indicative that this Network Appliance device meets the technical standards listed in "Declaration of Conformity," later in this appendix.

Caution

This is a Class A product. In a domestic environment this product may cause radio interference, in which case the user may be required to take adequate measures.

Bureau of Standards, Metrology, and Inspections notice (BSMI, Taiwan only)

警告使用者:

這是甲類的資訊產品, 在居住的環境中使用時,可能會造成射頻干擾, 在這種情況下, 使用者會被要求采取某些適當的對策.

Translation of the BSMI notice:

Warning: This is a Class A product. In a domestic environment this product may cause radio interference, in which case the user may be required to take adequate measures.

Voluntary Control Council for Interference by Information Technology Equipment (VCCI, Japan)

この装置は、情報処理装置等電波障害自主規制協議会（ＶＣＣＩ）の基準に基づくクラスＡ情報技術装置です。この装置を家庭環境で使用すると電波妨害を引き起こすことがあります。この場合には使用者が適切な対策を講ずるよう要求されることがあります。

Translation of the VCCI-A notice:

This is a Class A product based on the standard of the Voluntary Control Council for Interference by Information Technology Equipment (VCCI). If this equipment is used in a domestic environment, radio disturbance may arise. If such trouble occurs, the user may be required to take corrective actions.

Declaration of Conformity

Declaration of Conformity

Network Appliance, Inc.
495 East Java Drive
Sunnyvale, CA 94089, U.S.A,

declare under our sole responsibility that the products

Type of equipment	Description	Model number	Year of manufacture
Disk drive storage shelf	Fibre Channel disk shelf	DS14	2001
		DS14mk2 FC	2003

to which this declaration relates conform to the following standards:

EN 60950:2002, Information Technology Equipment (Safety)

EN 55022:1998, Emissions Requirements for Information Technology Equipment

EN 50024:1998, Immunity Requirements for Information Technology Equipment

EN 60825-1, Safety of Laser/LED Equipment

EN 61000-3-2:2002 Limits for Harmonic Current Emissions

EN 61000-3-3:1995/A1:2001 Limitation of Voltage Fluctuations and Flicker in Low-Voltage Supply Systems

following the provisions of the directives listed below:

73/23/EEC, Low Voltage Directive (Product Safety)

89/336/EEC, Electromagnetic Compatibility Directive

Part number: 210-02616

Index

A

AC power line sizes 96
AC power supplies
    connecting disk shelf to 41
antistatic wrist strap 7
audience vii

C

cabling
    multiloop, with multipath 37
    multiloop, without multipath 34
    multipath, without multiloop 36
command
    environ shelf 81
    fcstat device_map 90
    halt 61, 63, 73, 84
    storage disable 76
    storage disable adapter 79
    storage enable 77
    storage enable adapter 81
    storage show hub 50
conditions
    operating 5
    storage 5
connecting to a power source 41
connections of
    a second or third loop 34
    disk shelf to AC power 41
    disk shelf to DC power 42
    disk shelf to power source 41
    disk shelves to a storage appliance 26
    grounded disk shelves to a storage appliance 39
console error messages
    Alarm element 1 46
    cooling element, element 1 and 2 56
    Display element 1 46
    front operation panel 45
    LRC/ESH 49
    Open loop panic 92
    power supply 56
    power supply element 1 and 2 56
    SES electronics element 1 and 2 49, 50
    Soft address panic 93
    Speed mismatch termination 93
    Temperature sensor element 1, 2, and 3 45, 49, 50
    Vendor-specific element 1 and 2 50
conventions
    command viii
    formatting viii
    keyboard viii

D

DC power supplies
    connecting disk shelf to 41
DC wires, calculating the length of 97
device carrier, defined vii
differences between the disk shelves
    drives in drive carriers 2
    ESH 3, 27
    LRC 2, 27
    power consumption 6
    power requirements 6
    power supplies 2
    shelf chassis 2
disk drive compatibility 16
disk shelf dimensions 4
disk shelf ID 14
disk shelf weight 4
disk shelves vii
    connecting a single disk shelf 28
    connecting multiple disk shelves 32
    connecting to a storage appliance 26
    installing 18
    removing from a single configuration 61
    replacing 60
disks
    location of LEDs 57
    reasons to replace 65
    replacing 65
drive bay requirements 16

DS14 and DS14mk2 FC, differences 2

E

electrical requirements 5
element 49
empty drive shuttles, for empty drive bays 10
Enclosure Services, drive bays required for 16
environmental requirements 4
ESH error messages
    SES electronics element 1 and 2 49, 50
    Temperature sensor element 2 and 3 49, 50
    Vendor-specific element 1 and 2 50
ESH module, defined vii
ESH state messages
    MISSING 51
    OK 51
    XPORT ERROR 51
ESH, command to monitor 50

F

Fibre Channel Arbitrated Loop (FC-AL)
    adapter 28, 34
front operation panel
    Alarm element 1 46
    console error messages 45
    Display element 1 46
    interpreting LEDs 50
    location of LEDs 44
    monitoring the disk shelf ID 44
    Temperature sensor element 1 45

G

ground, connecting disk shelves to a storage appliance 39
grounding to a storage appliance 40

H

HA disk shelf, defined vii
hot-adding error message
    Open loop panic 92
    Soft address panic 93
hot-adding to an existing loop 89
hot-swap of LRC/ESH modules 76
hot-upgrade or hot-downgrade of LRC/ESH modules 78
humidity, environmental requirements 5

I

IDs, disk shelf 14
installation
    before you begin 14
    disk shelves 18
    LRC/ESH modules 75
    power supply 70
    preparing for 8
    site requirements for 1
    tools 7

L

labels
    drive bay population 14
    on the disk shelf 17
labels on the disk shelf 18
LED interpretation
    front operation panel 50
    LRC/ESH module 48
    power supplies 49
LED locations
    disks 57
    front operation panel 44
    power supply 55
loops, defined vii
LRC error messages
    SES electronics element 1 and 2 49
    Temperature sensor element 2 and 3 49
LRC module, defined vii
LRC/ESH
    console error messages 49
LRC/ESH module
    hot-swapping 76
    hot-upgrading or hot-downgrading 78
    installing 75
    interpreting LEDs 48
    removing 73
    replacing 72

M

mixed-shelf loop
    assumptions about 84
multiloop storage appliance vii
    adding a loop to 34
    requirements for 34

O

Operating conditions
    relative humidity 5
    temperature range 5

P

port state messages
    ///
        0xXX 53
    BYP/CLK 53
    BYP/CLOS 52
    BYP/CRC 53
    BYP/DTO 52
    BYP/GEN 53
    BYP/LIP 52
    BYP/LIPF7 53
    BYP/MAN 53
    BYP/MIR 53
    BYP/RLOS 52
    BYP/RPRT 52
    BYP/STALL 52
    BYP/TBI 52
    BYP/WRD 53
    BYP/XMIT 52
    EMPTY 52
    OK 52
power
    brownouts 6
    connecting disk shelves to 41
    consumption 6
    grounded electrical outlet 41, 71
    receptacles 71
    requirements 6
power supplies
    about AC and DC 41
    installing in a disk shelf 70
    interpreting LEDspower supply 49
    location of LEDs 55
    power cord with 71
    power switch for 71
    ratings of 6
    removing from a disk shelf 68
    replacing 68
power supply error messages
    cooling element, element 1 and 2 56
    power supply element 1 and 2 56

R

relative humidity, operating conditions 5
removal of
    disk shelf from daisy-chain 63
    disk shelves 61
    LRC/ESH modules 73
    power supplies 68
Removing 68
replacement of
    disk shelves 60
    disks 65
    LRC/ESH modules 72
    power supplies 68
requirements
    drive bay 16
    electrical 5
    environmental 4
    for connecting additional loops 34
    power 6
rules
    for drive bays 16
    for installing disk shelves 10

S

shelf state messages
    FAILED 51
    INIT REQD 51
    MISSING 51
    OFFLINE 51
    ONLINE 51
shipment contents 9
special messages ix
storage appliance, defined vii

storage show hub command output
Clock Delta 54
Insert Count 54
Invalid CRC Count 53
Invalid Word Count 54
Loop up Count 53
Stall Count 54
Utilization % 54
storage show hub output
ESH state 51
Port state 52
shelf state 51
Term switch 52
supported disks 16

T

temperature range, operating conditions 5
term switch messages
AUTO-TERM 52
OK 52
TERM 52
TERM-ERR 52
terminate, defined vii
terminology vii
thermal rating 6