F800 Series
Field Service Guide

Network Appliance, Inc.
495 East Java Drive
Sunnyvale, CA 94089 USA
Telephone: +1 (408) 822-6000
Fax: +1 (408) 822-4501
Support telephone: +1 (888) 4-NETAPP
Documentation comments: doccomments@netapp.com
Information Web: http://www.netapp.com

Part number 215-00216 +B0
May 2004

Copyright and trademark information

Copyright information

Copyright © 1994–2004 Network Appliance, Inc. All rights reserved. Printed in the U.S.A.

No part of this book covered by copyright may be reproduced in any form or by any means—graphic, electronic, or mechanical, including photocopying, recording, taping, or storage in an electronic retrieval system—without prior written permission of the copyright owner.

Network Appliance reserves the right to change any products described herein at any time, and without notice. Network Appliance assumes no responsibility or liability arising from the use of products described herein, except as expressly agreed to in writing by Network Appliance. The use or purchase of this product does not convey a license under any patent rights, trademark rights, or any other intellectual property rights of Network Appliance.

The product described in this manual may be protected by one or more U.S. patents, foreign patents, or pending applications.

RESTRICTED RIGHTS LEGEND: Use, duplication, or disclosure by the government is subject to restrictions as set forth in subparagraph (c)(1)(ii) of the Rights in Technical Data and Computer Software clause at DFARS 252.277-7103 (October 1988) and FAR 52-227-19 (June 1987).

Trademark information

NetApp, the Network Appliance design, NetApp–the Network Appliance Company, FAServer, NearStore, NetCache, and WAFL are registered trademarks of Network Appliance, Inc. in the United States and other countries. Network Appliance is a registered trademark of Network Appliance, Inc. in Monaco and a trademark of Network Appliance, Inc. in the United States and Canada. SnapCopy is a registered trademark of Network Appliance, Inc. in the European Union and a trademark of Network Appliance, Inc. in the United States. DataFabric, FilerView, SecureShare, SnapManager, SnapMirror, and SnapRestore are registered trademarks of Network Appliance, Inc. in the United States. Data ONTAP and Snapshot are trademarks of Network Appliance, Inc. in the United States and other countries. ApplianceWatch, BareMetal, Center-to-Edge, ContentDirector, gFiler, MultiStore, SecureAdmin, Serving Data by Design, Smart SAN, SnapCache, SnapDrive, SnapMover, SnapVault, vFiler, and Web Filer are trademarks of Network Appliance, Inc. in the United States. Spinnaker Networks, the Spinnaker Networks logo, SpinAccess, SpinCluster, SpinFS, SpinHA, SpinMove, SpinServer, and SpinStor are registered trademarks of Spinnaker Networks, LLC in the United States, other countries, or both. SpinAV, SpinManager, SpinMirror, and SpinShot are trademarks of Spinnaker Networks, LLC in the United States, other countries, or both.

Apple is a registered trademark and QuickTime is a trademark of Apple Computer, Inc. in the United States and/or other countries.

Microsoft is a registered trademark and Windows Media is a trademark of Microsoft Corporation in the United States and/or other countries.

RealAudio, RealNetworks, RealPlayer, RealSystem, RealText, and RealVideo are registered trademarks and RealMedia, RealProxy, and SureStream are trademarks of RealNetworks, Inc. in the United States and/or other countries.

All other brands or products are trademarks or registered trademarks of their respective holders and should be treated as such.

Network Appliance is a licensee of the CompactFlash and CF Logo trademarks.

Network Appliance NetCache is certified RealSystem compatible.

Table of Contents

Preface v

Safety Information (Sicherheitshinweise) ix

Chapter 1 **About Field-Replaceable Units** 1

Overview of the field-replaceable units 2

Required tools and equipment 6

Chapter 2 **Replacing Units in the PCB Carrier** 7

Opening the PCB carrier 8

Removing the PCB carrier 10

Replacing the motherboard 12

Replacing SDRAM DIMMs on the motherboard 19

Installing or replacing expansion adapters 22

Replacing the NVRAM III battery 31

Replacing the CPU fan and heat sink unit 36

Replacing the motherboard lithium battery. 38

Closing the PCB carrier. 40

Chapter 3 **Replacing a Chassis Fan** 41

Replacing the chassis fan subassembly. 42

Chapter 4 **Replacing the Power Supply** 47

Replacing the power supply 48

Chapter 5 **Replacing the LED/LCD Subassembly** 53

Replacing the LED/LCD subassembly 54

Chapter 6 **Replacing the Diskette Drive Subassembly** 57
Replacing the diskette drive subassembly 58

Chapter 7 **Replacing the CompactFlash Unit and Reader** 61
Replacing the CompactFlash unit 62
Replacing the CompactFlash reader subassembly 64

Appendix A **Communications Regulations**. 69
Regulatory notices 70
Declaration of Conformity 72

Index 73

Preface

About this guide

This guide describes the field service procedures for replacing, upgrading, and maintaining hardware units in the NetApp® F800 series filers.

Use this guide after you familiarize yourself with the system hardware by reading the guides in the following table.

Note

The most current versions of these guides are available on the NetApp on the Web (NOW) Web site at http://now.netapp.com.

Reference document...	Provides information about...
Data ONTAP™ System Administration Guides	How to operate and manage your filer
F800 Series Hardware Guide	Initial system installation
Diagnostics Guide	How to operate the diagnostics available for NetApp filers

This guide does not provide information about disk shelves. For disk shelf information, see the hardware guide for the disk shelf that is part of your system.

Audience

This guide is for qualified system administrators and service personnel who are familiar with Network Appliance™ filers and have the following skills and experience:

- Working familiarity with small computer system hardware and operation
- Basic understanding of common networking concepts and practices
- Working familiarity with accepted tools and procedures for installing and operating sensitive electronic equipment

Terminology

In this guide,

- *Filer* refers to an F810, F820, F840, F825, or F880 filer.
- *Disk shelf* refers to any Network Appliance Fibre Channel disk shelf.
- *Expansion adapters* used in F800 series filers refers to the following:
  - NVRAM III adapter

- Cluster interconnect adapter, VI cluster adapter, IB cluster adapter, or VI-MC cluster adapter
- FC-AL adapter or dual-port Fibre Channel adapter
- SCSI tape adapter
- Network interface cards (NICs)
- DAFs network adapter

Note

See the *System Configuration Guide* at http://now.netapp.com for a current list of expansion adapters that you can use with your filer.

- *CompactFlash unit* refers to the CompactFlash™ card and adapter that together plug into the F825 and F880 CompactFlash reader as the primary boot device.

Special messages

This guide contains special messages that are described as follows:

Note

A note contains important information that helps you install or operate the system efficiently.

Caution

A caution contains instructions that you must follow to avoid damage to the equipment, a system crash, or loss of data.

WARNING

A warning contains instructions that you must follow to avoid personal injury.

Safety Information (Sicherheitshinweise)

Safety rules

All products are Class 1 laser devices. You must follow these safety rules when working with this equipment:

WARNING

Failure to follow these directions could result in bodily harm or loss of life.

- **Switzerland only—for FAS900, GF900, R200, and C6200 systems:** This equipment relies on fuses/circuit breakers in the building installation for overcurrent protection. Each power supply must receive power from a separately dedicated outlet with a 10A fuse/circuit breaker.
- When installing disk shelves and a storage appliance into a movable cabinet or rack, install from the bottom up for best stability.
- DC-based systems must be installed in a restricted access location and the two input power terminals for the DC power supply must be connected to separate isolated branch circuits.
- To reduce the risk of personal injury or equipment damage, allow internal components time to cool before touching them and ensure that the equipment is properly supported or braced when installing options.
- This equipment is designed for connection to a grounded outlet. The grounding type plug is an important safety feature. To avoid the risk of electrical shock or damage to the equipment, do not disable this feature.
- This equipment has one or more replaceable batteries. There is danger of explosion if the battery is incorrectly replaced. Replace the battery only with the same or equivalent type recommended by the manufacturer. Dispose of used batteries according to the manufacturer's instructions.

Warning for units with multiple power cords

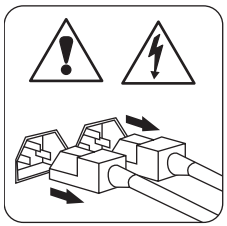

If your storage appliance or disk shelf has multiple power cords and you need to turn the unit off, heed the following warning:

WARNING

This unit has more than one power supply cord. To reduce the risk of electrical shock, disconnect all power supply cords before servicing.

Sicherheitsvorgaben

Alle Produkte sind Lasergeräte der Klasse 1. Die folgenden Sicherheitshinweise sind beim Betreiben des Geräts unbedingt zu beachten:

Vorsicht

Nichtbeachtung dieser Anweisungen kann zu schweren Körperschäden führen oder tödlich sein.

- **Nur für die Schweiz - Systeme FAS900, GF900, R200 und C6200:** Diese Geräte erfordern den Festeinbau von Sicherungen zum Überstromschutz. Jeder Netzanschluss muss mit Strom aus getrennten, speziell für diesen Zweck vorgesehenen Steckdosen versorgt werden, die jeweils mit einer 10A-Sicherung geschützt sind.
- Bei der Montage der Diskettenregale und Archivierungsgeräte, des NetCache™ -Geräts oder des NearStore® -Systems in bewegliche Schränke oder Regale sind die Geräte von unten nach oben einzubauen, um optimale Stabilität zu gewährleisten.
- Gleichstrom-Systeme müssen an Betriebsstaette mit beschraenktem Zutritt installiert sein und die beiden Eingangsstromklemmen für das Gleichstrom-Netzteil müssen an separate und isolierte Abzweigleitungen angeschlossen sein.
- Zum Schutz vor Körperverletzung oder Sachschäden am Gerät lassen Sie die inneren Bauteile stets vor dem Berühren abkühlen. Sorgen Sie dafür, dass das Gerät richtig abgestützt ist oder fest aufrecht steht, bevor Sie neues Zubehör einbauen.
- Dieses Gerät ist für die Einspeisung aus einer geerdeten Netzverbindung ausgelegt. Der Netzstecker mit Erdungsvorrichtung ist ein wichtiger Sicherheitsschutz. Zum Schutz vor elektrischem Schlag oder Sachschäden am Gerät die Erdung nicht abschalten.
- Das Gerät ist mit einer oder mehreren auswechselbaren Batterien ausgestattet. Bei unsachgemäßem Auswechseln der Batterie besteht Explosionsgefahr. Batterien nur mit dem vom Hersteller empfohlenen Typ oder entsprechenden Typen ersetzen. Gebrauchte Batterien sind gemäß den Anweisungen des Herstellers zu entsorgen.

Warnhinweis für Geräte mit mehrfachen Netzanschlussleitungen

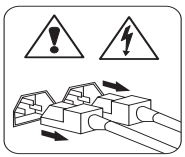

Sollte Ihr Archiviergerät, NetCache-Gerät, NearStore-System oder Diskettenregal mehrfache Netzanschlussleitungen aufweisen und Sie wollen das Gerät abschalten, bitte folgenden Warnhinweis beachten.

ACHTUNG

Gerät besitzt zwei Netzanschlussleitungen. Vor Wartung alle Anschlüsse vom Netz trennen.

About Field-Replaceable Units

1

About this chapter

This chapter identifies the field-replaceable units in the NetApp F800 series filers.

Topics in this chapter

This chapter provides information about the following topics:

- "Overview of the field-replaceable units" on page 2
- "Required tools and equipment" on page 6

Overview of the field-replaceable units

About field-replaceable units

The NetApp F800 series filers provide easy access so that you can remove and install units in the field. The units are accessible from the front or back panel. You must purchase all field-replaceable units (FRUs) from Network Appliance or an authorized reseller.

Replacing FRUs in clustered filers

Before changing FRUs in clustered filers you should see the *F800 series Cluster Guide*. The cluster guide contains information about how to remove clustered hardware, change an adapter, and reset up and retest your cluster after you change FRUs.

Units that can be individually replaced

You can replace the following units in the field:

- Expansion adapters
  - NVRAM III (nonvolatile random access memory) adapter
  - FC-AL or SCSI adapter for tape drive backup
  - FC-AL adapters or dual-port Fibre Channel adapters for Fibre Channel disk shelves
  - Dual-port FC adapters for Target mode (F825 and F880 only)
  - DAFs network adapter
  - Network interface cards (NICs)
  - Cluster interconnect adapter, VI cluster adapter, IB cluster adapter, or VI-MC cluster adapter
- Motherboard with lithium battery and with or without DIMMs
- DIMMs
  - NVRAM III DIMM
  - Motherboard DIMMs
- Batteries
  - NVRAM lead-acid battery
  - Motherboard lithium battery
- CPU fan and heatsink (F810, F820, F825, and F840 only)
- CompactFlash and CompactFlash reader subassembly (F825 and F880 only)
- 3.5-inch diskette drive subassembly (F810, F820, and F840 only)

- Power supplies
- Chassis fan subassemblies
- LED/LCD subassembly
- Filer bezel

Units that cannot be individually replaced

Replacement of the onboard 10Base-T/100Base-TX Ethernet interface on the motherboard requires replacement of the motherboard.

Units that can be optionally added

You can add the following units to the F800 series filers in the field:

- Additional FC-AL adapters or dual-port Fibre Channel adapters for Fibre Channel disk storage
- Additional SCSI adapter for tape drive backup (F840 and F880 only)
- Additional NICs
- Cluster interconnect adapter (F820, and F840 only), the VI cluster adapter for all F800 filers in a cluster, IB cluster adapter for clusters between 30 and 500 meters, or VI-MC cluster adapter for long distance fabric attached clusters

Units accessible from the filer front

A bezel covers the front panel of the filer. You can remove the bezel to gain access to the following units in the filer:

- Fan subassemblies
- LED/LCD subassembly
- Diskette drive subassembly on the F810, F820, or F840
- CompactFlash unit and CompactFlash reader subassembly on the F825 and F880

The following figure shows the replaceable units accessible from the front panel of the F800 series filers.

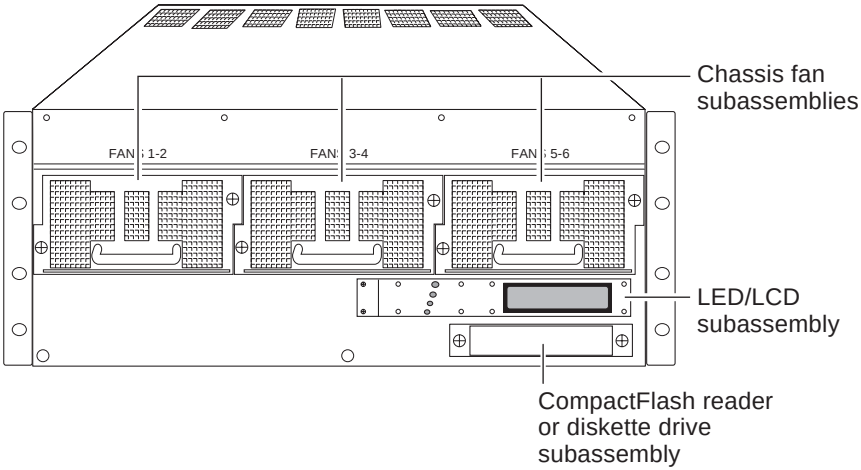

Units accessible from the filer back

The following units are accessible from the back of the filer:

- Power supplies
- PCB carrier, a slide-mounted tray that serves as the mounting base for the motherboard

The following figure shows the units accessible from the back of an F800 series filer with AC power.

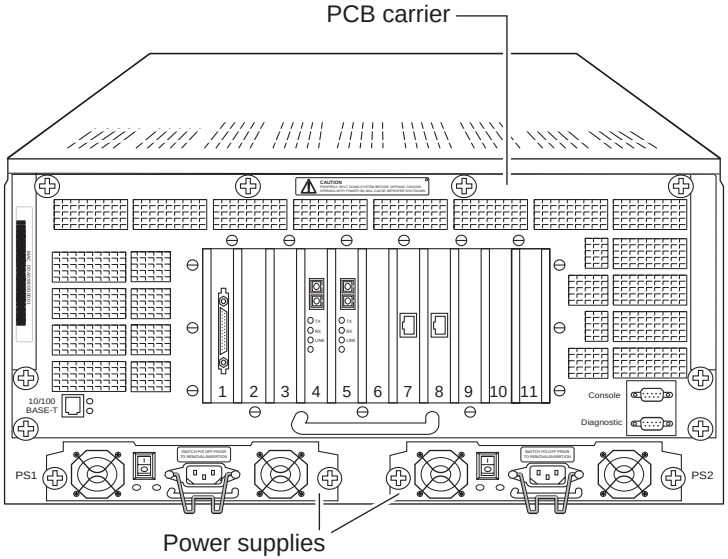

Required tools and equipment

Required tools and equipment

To replace components, you need the following tools and equipment:

- Phillips screwdrivers (#0, #1, and #2)
- 3/16-inch socket wrench
- Torque screwdriver
- Antistatic wrist strap and grounding leash
- Antistatic bag

Caution

The filer uses electronic components that are sensitive to static electricity. Static discharge from your clothing or other fixtures around you can damage these components. Wear an antistatic wrist strap and grounding leash to free yourself of static electricity before touching any electronic components.

If you are adding expansion adapters to the filer, check for information about expansion adapter slot assignments in the *System Configuration Guide* at http://now.netapp.com.

Replacing Units in the PCB Carrier 2

About this chapter

This chapter provides the necessary procedures for replacing units in the PCB carrier.

Topics in this chapter

This chapter provides information about the following topics:

- "Opening the PCB carrier" on page 8
- "Removing the PCB carrier" on page 10
- "Replacing the motherboard" on page 12
- "Replacing SDRAM DIMMs on the motherboard" on page 19
- "Installing or replacing expansion adapters" on page 22
- "Replacing the NVRAM III battery" on page 31
- "Replacing the CPU fan and heat sink unit" on page 36
- "Replacing the motherboard lithium battery" on page 38
- "Closing the PCB carrier" on page 40

Opening the PCB carrier

Reasons to open the PCB carrier

You open the PCB carrier to access the motherboard, expansion adapters, and other field-replaceable units in your filer.

Opening the PCB carrier

To open the PCB carrier, complete the following steps.

Step	Actions
1	Shut down the filer by entering the following command at the console: **`halt`** **Caution** Always use the `halt` command to perform a clean shutdown.
2	Turn off and disconnect the power to your filer.
3	Put on anantistatic wrist strap and attach the grounding leash to the filer chassis.
4	Using a #1 or #2 Phillips screwdriver, loosen the eight thumbscrews on the back panel of the PCB carrier. 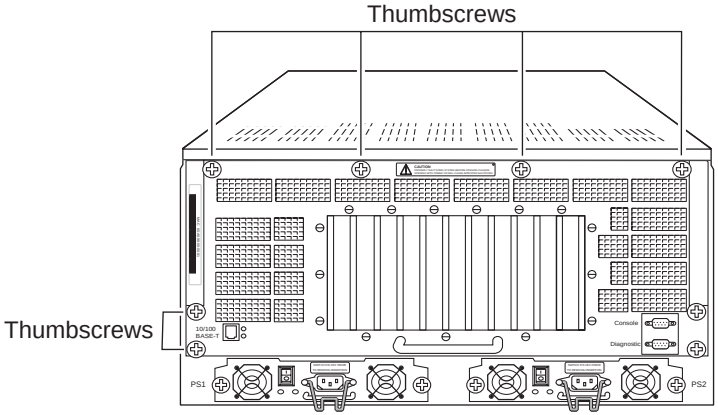

Step	Actions
5	Carefully pull the PCB carrier out of the chassis until the carrier tabs click to lock the slide rails in place. The PCB carrier has a travel distance of approximately 19 inches (48.26 centimeters). **WARNING** **Use caution when servicing components in the chassis. There is danger of electric shock from hazardous energy on the backplane.** 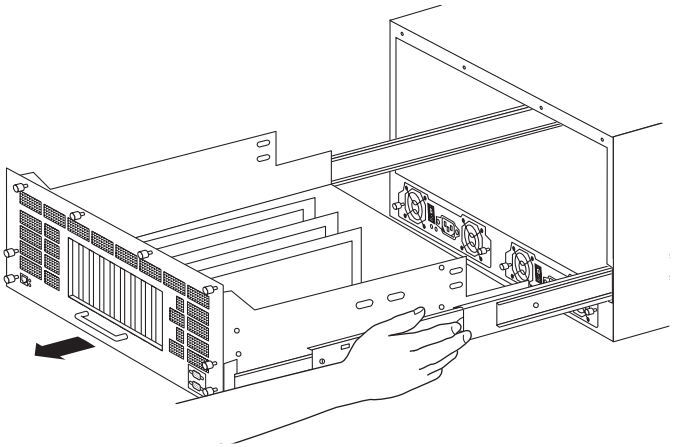

Removing the PCB carrier

Reasons to remove the PCB carrier

You can remove the PCB carrier from the filer to make maneuvering easier when replacing units.

Removing the PCB carrier

To remove the PCB carrier from the filer, complete the following steps.

Step	Action
1	Open the PCB carrier. Follow the procedure in “Opening the PCB carrier” on page 8.
2	Press inward on the carrier tabs on each slide rail while pulling the PCB carrier out of the chassis. 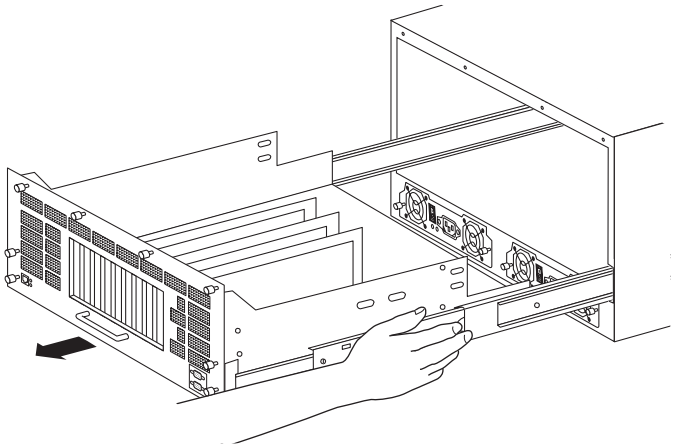
3	Support the PCB carrier with both hands, and set it aside.

Step	Action	
4	**If you are...**	**Then...**
	Replacing the motherboard	Disconnect all cables connected to the ports on the back of the PCB carrier and go to "Replacing the motherboard" on page 12.
	Not replacing the motherboard, but you are replacing units on it	Go to the appropriate procedure for the unit you are replacing: ◆ "Replacing SDRAM DIMMs on the motherboard" on page 19 ◆ "Installing or replacing expansion adapters" on page 22 ◆ "Replacing the NVRAM III battery" on page 31 ◆ "Replacing the CPU fan and heat sink unit" on page 36 ◆ "Replacing the motherboard lithium battery" on page 38

Replacing the motherboard

About the motherboard components

Replacing the motherboard consists of the following procedures:

- "Removing the motherboard" on page 15
- "Installing the motherboard" on page 17

F800 series motherboard variations

The F800 series motherboard has variations for the following filers:

- F810
- F820
- F825
- F840
- F880

F810 motherboard: The following figure shows the F810 motherboard.

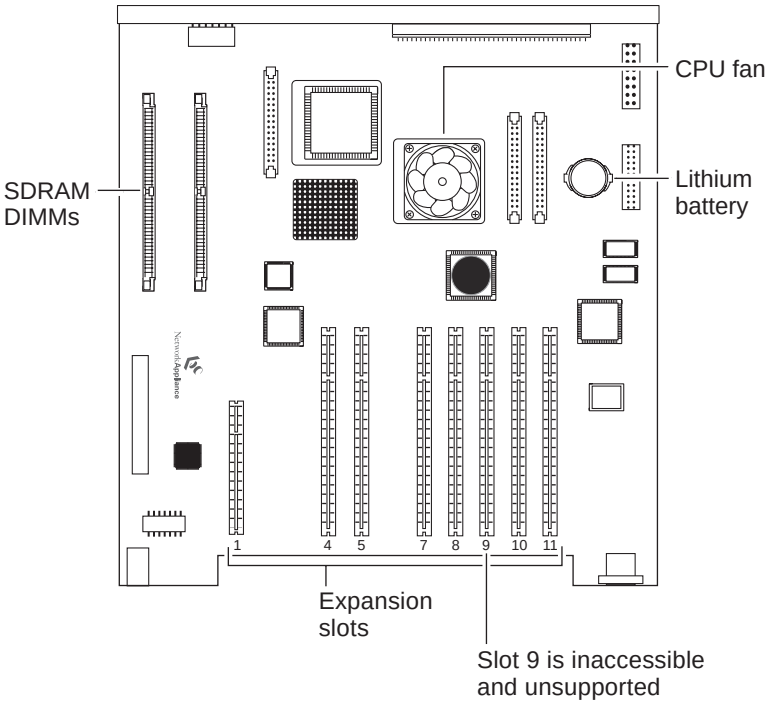

F820 and F825 motherboard: The following figure shows the F820 and F825 motherboard.

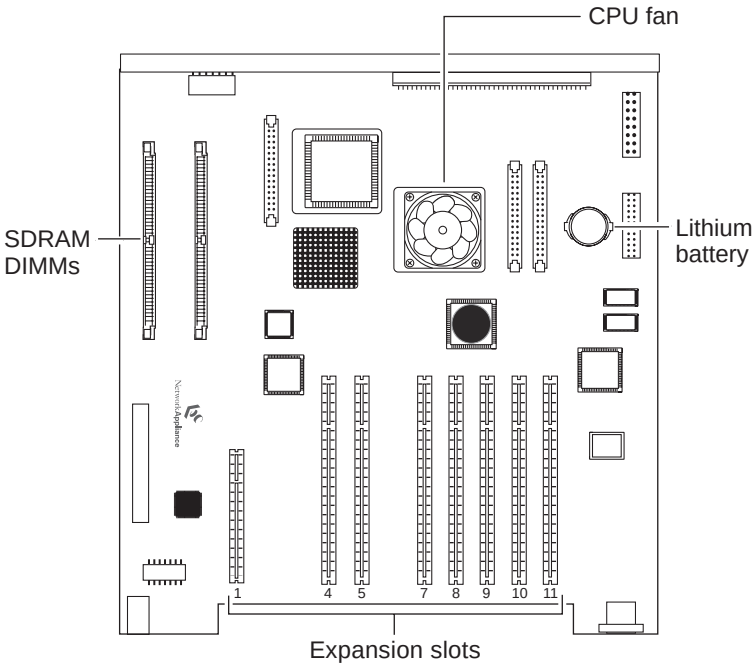

F840 motherboard: The following figure shows the F840 motherboard.

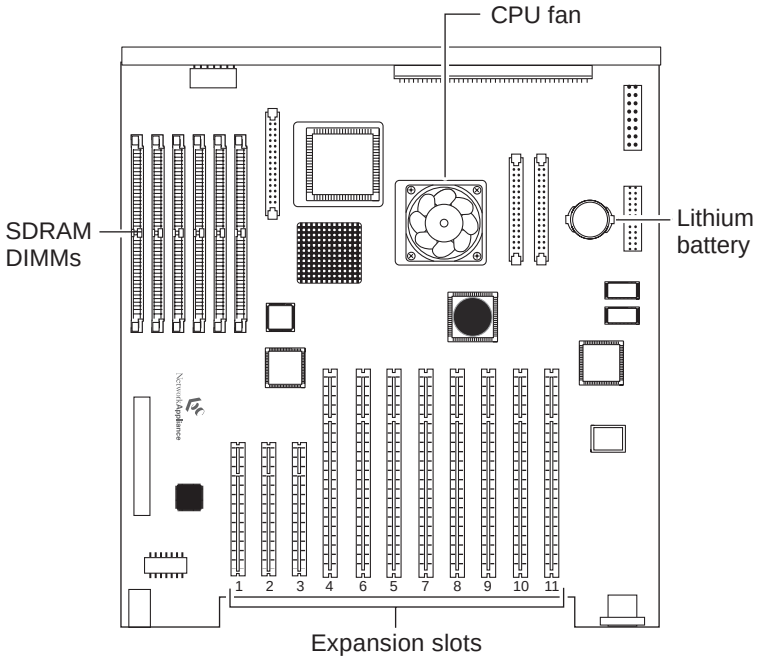

F880 motherboard: The following figure shows the F880 motherboard.

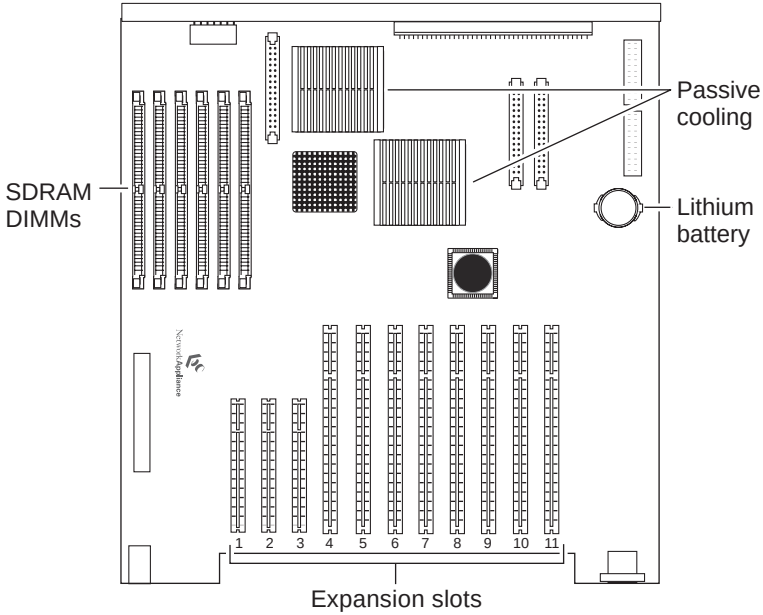

Removing the motherboard

To remove the motherboard, complete the following steps.

Caution

To prevent shorting the NVRAM III battery, you must perform this procedure on a nonconductive surface. Shorting the NVRAM III battery causes data loss.

Step	Action
1	Open the PCB carrier by following Step 2 through Step 5 of the procedure described in "Opening the PCB carrier" on page 8. **Note** When the motherboard fails, your filer performs a "dirty shutdown." This prevents you from performing the recommended clean shutdown. However, the data from the last transaction is still buffered in the battery-backed memory on the NVRAM III adapter.

Step	Action
2	Remove the PCB carrier by following Step 2 through Step 4 of the procedure described in “Removing the PCB carrier” on page 10.
3	Using the #0 or #1 Phillips screwdriver, remove all adapters except the NVRAM III adapter from the expansion slots on the motherboard by following Step 2 through Step 6 of the procedure described in “Removing an existing expansion adapter” on page 23. Set the screws and adapters aside for later use.
4	Using a #0 or #1 Phillips screwdriver, remove the screw securing the NVRAM III adapter to the PCB carrier. Set the screw aside for later use.
5	Lift the NVRAM III adapter out of the expansion slot and carefully lay it over the side of your filer. This allows easy access for the removal of the NVRAM III battery. **Caution** If a dirty shutdown occurred, do not disconnect the NVRAM III battery wire from the NVRAM III adapter. This disconnection causes data loss. 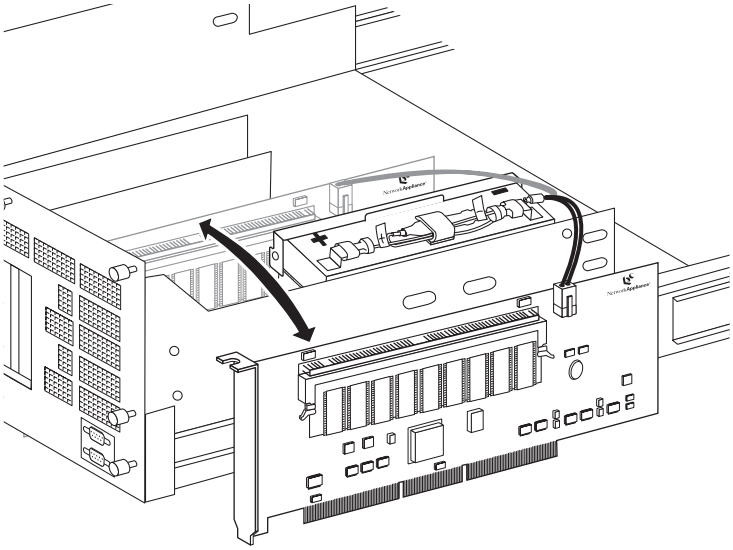

Step	Action
6	Using a #1 or #2 Phillips screwdriver, loosen the two thumbscrews securing the NVRAM III battery carrier to the filer chassis.
7	Lift the NVRAM III battery out of the PCB carrier and place the battery and the still-connected NVRAM III adapter on the nonconductive surface.
8	Remove all SDRAM DIMMs from the motherboard by following Step 3 through Step 5 of the procedure described in "Removing an SDRAM DIMM" on page 19. Set the SDRAM DIMMs aside for later use.
9	Using a 3/16-inch socket wrench, remove the four screws on the back of the chassis that secure the Console and Diagnostic ports to the chassis.
10	Using a #2 Phillips screwdriver, remove the 11 screws securing the motherboard to the PCB carrier.
11	Lift the motherboard and slide it out of the PCB carrier.

Installing the motherboard

To install the motherboard, complete the following steps.

Step	Action
1	Slide the replacement motherboard into the PCB carrier and, using a #2 Phillips screwdriver, secure the motherboard to the PCB carrier with the 11 screws.
2	Reinstall all SDRAM DIMMs into the motherboard by following Step 2 through Step 4 of the procedure described in "Installing an SDRAM DIMM" on page 20.

Step	Action
3	Without disconnecting the wire from the NVRAM III adapter, reinstall the NVRAM III battery into its place on the PCB carrier. **Note** Maintaining the connection between the NVRAM III adapter and the NVRAM III battery is necessary only if a dirty shutdown occurred.
4	Tighten the two thumbscrews securing the NVRAM III battery carrier to the PCB carrier.
5	Carefully turn over the still-connected NVRAM III adapter that is outside the filer and reinstall it in the expansion slot.
6	Using the #0 or #1 Phillips screwdriver, secure the NVRAM III adapter to the PCB carrier.
7	Reinstall all other adapters into the expansion slots on the motherboard by following Step 2 through Step 6 of the procedure described in "Installing an expansion adapter" on page 25.
8	Using a 3/16 socket wrench, connect all the screwlocks to the PCB carrier.
9	Paste the MAC (Media Access Control) address label provided with the replacement motherboard on the PCB carrier, as shown. 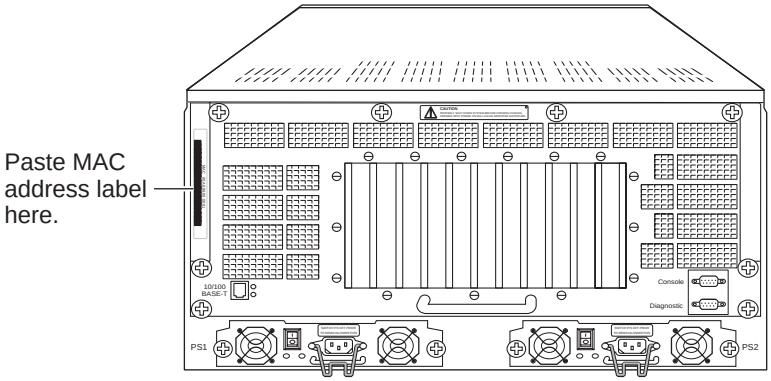
10	Go to "Closing the PCB carrier" on page 40.

Replacing SDRAM DIMMs on the motherboard

About replacing SDRAM DIMMs

This section provides the supported memory configurations for your filer and the procedures for replacing the SDRAM DIMMs on the motherboard. Replacing the SDRAM DIMMs on the motherboard consists of the following procedures:

- "Removing an SDRAM DIMM" on page 19
- "Installing an SDRAM DIMM" on page 20

Supported memory configurations

The following table lists the supported memory configurations for the F800 series filers.

Filer	DIMM slots	Required memory configuration
F810	J40, J43	3.3V, registered, 2 x 256 MB SDRAM DIMMs
F820 F825	J40, J43	3.3V, registered, 2 x 512 MB SDRAM DIMMs
F840 F880	J40, J41, J42, J43, J44, J45	3.3V, registered, 6 x 512 MB SDRAM DIMMs

Caution

All DIMMs must be listed on the Network Appliance Approved Parts List. Contact Network Appliance Sales to obtain this list. Unapproved DIMMs have not been tested for reliability and might cause system downtime.

Removing an SDRAM DIMM

To remove an SDRAM DIMM, complete the following steps.

Step	Action
1	Open the PCB carrier. Follow the procedure in "Opening the PCB carrier" on page 8.
2	Locate the DIMM that you want to remove.

Step	Action
3	Push apart the latches on either side of the DIMM to release the DIMM from its slot, as shown. 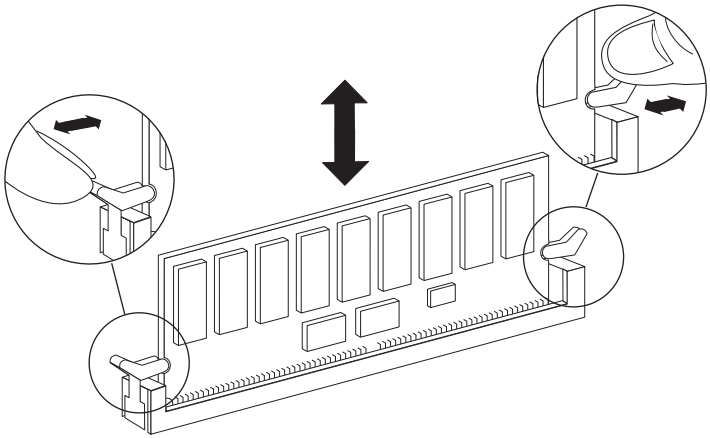
4	Pull the DIMM out of the slot.
5	Set the DIMM aside in an antistatic bag.

Installing an SDRAM DIMM

To install the SDRAM DIMM, complete the following steps.

Step	Action
1	Locate the DIMM slot for the DIMM you are installing.
2	Hold the DIMM by its top corners to avoid damaging the components.

Step	Action
3	Insert the DIMM straight into the slot. The DIMM fits tightly in the slot, but should go in easily. If not, realign the DIMM with the slot and try again. **Caution** Visually inspect the DIMM to verify that it is evenly aligned and fully inserted into the slot; otherwise, the edge connector on the DIMM does not make complete contact with the slot.
4	Push carefully, but firmly on the top edge of the DIMM until the latches snap into place.
5	Go to “Closing the PCB carrier” on page 40.

Installing or replacing expansion adapters

About installing or replacing expansion adapters

This section describes the steps involved in replacing an expansion adapter or installing a new expansion adapter. Replacing an expansion adapter consists of the following procedures:

- "Removing an existing expansion adapter" on page 23
- "Installing an expansion adapter" on page 25

Additional procedures: The NVRAM adapter might also require the following additional procedures:

- "Removing the NVRAM III DIMM" on page 28
- "Installing the NVRAM III DIMM" on page 29

Expansion adapters used

The NetApp F800 series filers use the following expansion adapters:

- NVRAM III adapter
- Dual-port FC adapters for Target mode (F825 and F880 only)
- FC-AL adapters or dual Fibre Channel adapters for disk storage
- Tape adapters
  - SCSI
  - FC-AL
- Cluster interconnect adapter, VI cluster adapter, IB cluster adapter, or VI-MC cluster adapter
- Network interface cards
- VI/IP DAFs adapter

Slot assignments for expansion adapters

If you are adding expansion adapters to your filer, the System Configuration Guide at http://now.netapp.com provides current configuration information for the following:

- Expansion slots that are available on your filer
- Supported adapters
- Expansion slot assignments

Caution

Install only supported expansion adapters in the assigned expansion slots. To ensure compatibility, performance, and reliability, you must obtain expansion adapters for your filer from Network Appliance or an authorized reseller.

Removing an existing expansion adapter

To remove existing expansion adapters, complete the following steps.

Step	Action	
1	Open the PCB carrier. Follow the procedure in "Opening the PCB carrier" on page 8.	
2	Note which cables (if any) are connected to the connectors on the faceplate of the expansion adapter before disconnecting the cables. **Caution** Do not disconnect or connect SCSI cables while your filer is powered up. You could cause permanent damage to the hardware.	
3	**If you are replacing the...**	**Then...**
	NVRAM III adapter or replacing the DIMM on the NVRAM III adapter	Unplug the electrical wires from the J1 connector on the NVRAM III adapter. See the figure in "Replacing the NVRAM III battery" on page 31. **Caution** If you did not perform a clean shutdown using the `halt` command, disconnecting the NVRAM battery from the NVRAM III adapter results in data loss.
	FC-AL adapter for tape or disk storage	Press the latches on both sides of the HSSDC port of the GBIC module and remove the module. This enables you to remove the adapter without difficulty.

Step	Action	
	VI cluster adapter	Flip the locking lever on the GBIC module to the left and remove the module. This enables you to remove the adapter without difficulty.
	VI/IP DAFs adapter	Go to Step 4.
4	Remove the screw holding the expansion adapter faceplate to the back panel bracket and save both for reinstalling the adapter.	
5	Pull upward on the top edge of the expansion adapter and lift it out of the chassis, as shown. 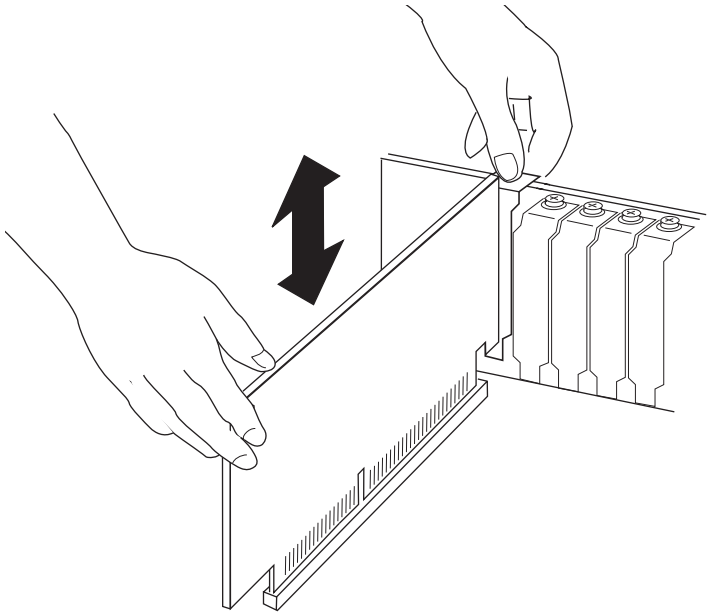	

Step	Action	
6	**If you removed...**	**Then...**
	An FC-AL adapter	Plug the GBIC module of the adapter back into the socket. This enables you to keep track of the GBIC module.
	A VI cluster adapter	
7	**If you are...**	**Then...**
	Not installing a replacement expansion adapter	Install a faceplate over the empty slot.
	Installing a replacement expansion adapter	Go to "Installing an expansion adapter" on page 25.
	Replacing the DIMM on the NVRAM adapter	Go to "Replacing the NVRAM III battery" on page 31.

Installing an expansion adapter

To install an expansion adapter, complete the following steps.

Step	Action	
1	**If you are...**	**Then...**
	Installing a new adapter	Take the adapter out of the antistatic bag and discard the bag.
	Installing a replacement adapter	Take the replacement adapter out of the antistatic bag and place the used adapter into that bag.

Step	Action	
	If you are...	**Then...**
	Replacing or reinstalling an NVRAM III adapter	Plug the electrical wires from the NVRAM battery to the connector on the NVRAM III adapter. See the figure in "Replacing the NVRAM III battery" on page 31.
	Replacing an FC-AL adapter	**1.** Press the latches on both sides of the HSSDC port of the GBIC module and remove the module. **Note** The dual channel adapter does not have a GBIC module. Skip this step and go to Step 3. **2.** Go to Step 2.
	Replacing a VI cluster adapter	**1.** Flip the locking lever on the GBIC module to the left and remove the module. **2.** Go to Step 2.
	Reinstalling all other adapters	Go to Step 2. You reinstall adapters when you replace the motherboard.
2	Holding the adapter by its top edge, with the faceplate near the back of the machine, lower the adapter into the slot until its connector edge meets the grooves in the expansion slot. The faceplate of the adapter should be in position against the back panel, and should cover the endplate slot on the back panel.	
3	Press carefully on the top edge of the adapter until the edge connector is seated in the expansion slot.	
4	Replace the faceplate screw to secure the adapter to the back panel.	

Step	Action	
5	**If you replaced...**	**Then...**
	An FC-AL adapter	Plug the GBIC module of the adapter back into the socket.
	A VI cluster adapter	
6	Reconnect the cables to the external connectors on the replacement expansion adapter.	
7	Go to “Closing the PCB carrier” on page 40.	

Replacing the NVRAM III DIMM

About replacing the NVRAM III DIMM

Replacing the NVRAM III DIMM consists of the following procedures:

- "Removing the NVRAM III DIMM" on page 28
- "Installing the NVRAM III DIMM" on page 29

Locating the NVRAM III DIMM slot

The following figure shows the location of the NVRAM DIMM slot on the NVRAM III adapter.

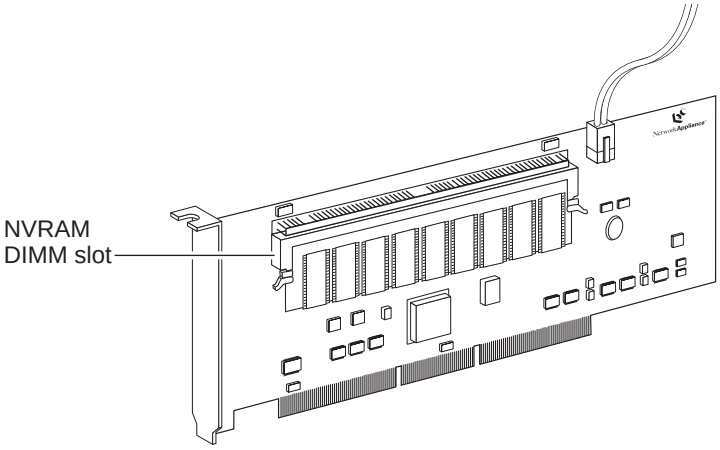

Removing the NVRAM III DIMM

To remove the NVRAM III DIMM, complete the following steps.

Note

This procedure assumes that you have already removed the NVRAM III adapter, as described in "Removing an existing expansion adapter" on page 23.

Step	Action
1	Push apart the latches on both sides of the DIMM with your index fingers. 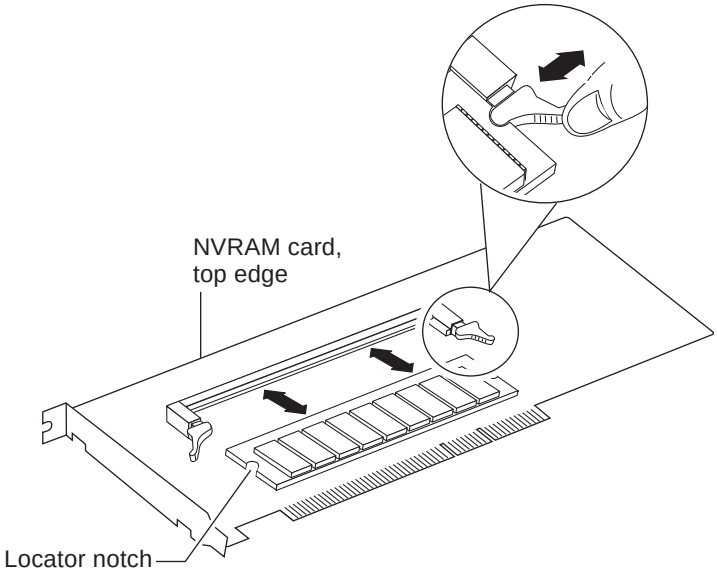
2	Place the DIMM in an antistatic bag.

Installing the NVRAM III DIMM

To install the NVRAM III DIMM, complete the following steps.

Step	Action
1	Hold the DIMM at the top corners to avoid damaging the components or the edge connector.

Step	Action
2	Align the DIMM over the slot and then tilt the top edge of the DIMM at a slight angle away from the top edge of the NVRAM adapter.
3	Insert the DIMM into the slot. The DIMM should slide into the slot easily if you wiggle the DIMM into position. If not, realign the DIMM with the slot and try again.
4	Push the DIMM into the slot until the mounting tabs close over the DIMM to lock it in place. **Caution** Visually inspect the DIMM to verify that it is evenly aligned and fully inserted into the slot; otherwise, the DIMM could bend or break when pushed to the locked position.
5	Return to "Installing an expansion adapter" on page 25 to complete the installation.

Replacing the NVRAM III battery

About replacing the NVRAM III battery

The NVRAM adapter has one detached, sealed, lead-acid battery that is recharged whenever the system is turned on and operating normally. If the battery continues to read low after 24 hours of normal system operation, you must replace the battery or the NVRAM III adapter.

Note

The NVRAM III adapter in the F800 series is different from the NVRAM adapter in other models of NetApp filers. It is not interchangeable with NVRAM adapters from other models of NetApp filers.

Replacing the NVRAM battery consists of the following procedures.

- "Removing the NVRAM III battery" on page 32
- "Installing the NVRAM III battery" on page 34

Location of the NVRAM III battery

The following figure shows the battery location.

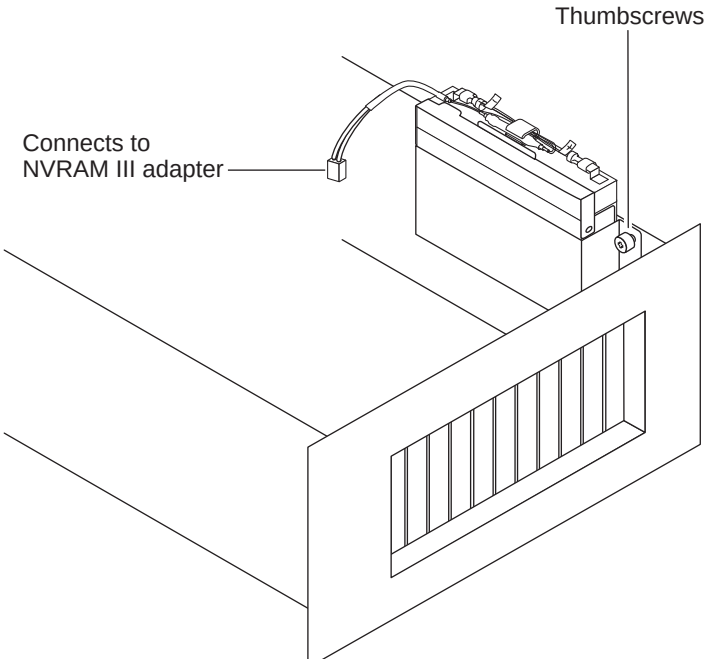

Removing the NVRAM III battery

To remove the NVRAM III battery, complete the following steps.

Step	Action
1	Open the PCB carrier. Follow the procedure in "Opening the PCB carrier" on page 8. **Caution** Be sure to wear anantistatic wrist strap and attach the grounding leash to the filer chassis.
2	Unplug the electrical cable from the connector on the NVRAM III adapter. **Caution** If you did not perform a clean shutdown using the `halt` command, disconnecting the NVRAM III battery from the NVRAM III adapter results in data loss. 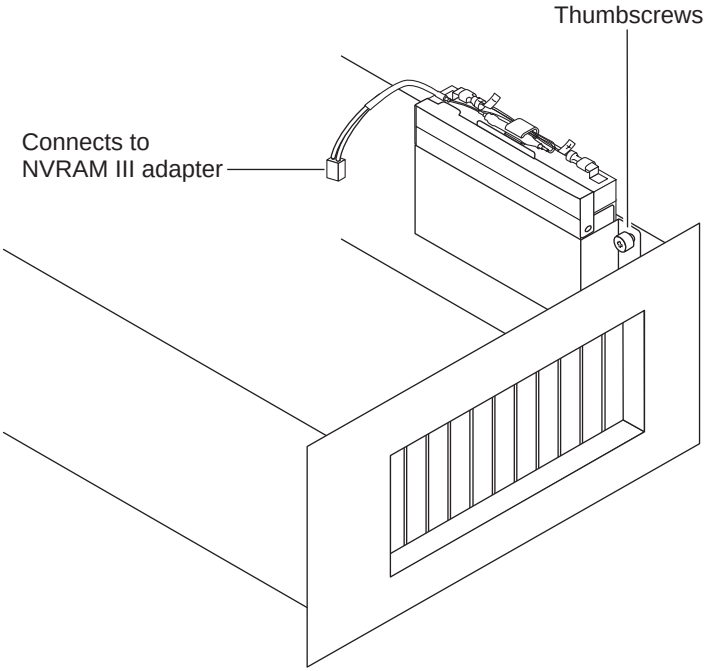

Step	Action
3	Flip down the retaining clip on the battery carrier. **WARNING** **If the battery is leaking, follow the procedure in "Handling a leaking NVRAM III battery" on page 33.**
4	Remove the battery from the battery carrier in the chassis and set it aside.

Handling a leaking NVRAM III battery

The hazardous components of the NVRAM III battery are lead, sulphuric acid, fiberglass, and polystyrene.

To handle a leaking NVRAM III battery, complete the following steps.

Caution
Perform this procedure after you remove the battery from the filer.

Step	Action
1	Neutralize the leaking substance with bicarbonate (baking soda), sodium carbon (soda ash), or calcium oxide (lime). **WARNING** **Dispose of the neutralized hazardous battery substance in accordance with local, state, and federal laws. Do not flush or pour into the sewage system.**

Step	Action	
2	**If the unneutralized substance...**	**Then...**
	Has made contact with your skin and the contact area is large, or if blisters form	Flush the affected area with water and see a physician.
	Has made contact with your eye	Call a physician immediately and flush your eye with water until the physician arrives.
	Is ingested	Call a physician. If the patient is still conscious, also flush the patient's mouth with water and have the patient drink milk or sodium bicarbonate solution.

Installing the NVRAM III battery

To install the NVRAM III battery, complete the following steps.

WARNING

Danger of explosion if battery is incorrectly replaced. Replace only with the same or equivalent type recommended by the manufacturer. Dispose of used batteries according to manufacturer's instructions.

AVERTISSEMENT

Il y a danger d'explosion s'il y a remplacement incorrect de la pile. Remplacer la pile seulement avec une pile du même type ou d'un type équivalent recommandé par le fabricant. Mettre au rebut les piles usagées selon les instructions du fabricant.

ACHTUNG

Explosionsgefahr bei unsachgemäßem Austausch der Batterie. Die Batterien nur durch denselben oder einen vom Hersteller empfohlenen gleichwertigen Typ ersetzen. Gebrauchter Batterien nach Angaben des Herstellers loswerden.

Step	Action
1	Insert the NVRAM III battery into the battery carrier in the chassis, and flip up the retaining clip to secure the battery in place.
2	Plug the electrical cable into the J1 connector on the NVRAM III adapter.
3	Go to “Closing the PCB carrier” on page 40.

Replacing the CPU fan and heat sink unit

About replacing the CPU fan and heat sink unit

This section describes the procedures for replacing the CPU fan and heat sink unit in an F810, F820, F825, or F840 filer.

Note

The F880 filer only has a heat sink without a CPU fan.

Replacing the CPU fan and heat sink unit consists of the following procedures:

- "Removing the CPU fan and heat sink unit" on page 36
- "Installing a CPU fan and heat sink unit" on page 37

Removing the CPU fan and heat sink unit

To remove the CPU fan and heat sink unit, complete the following steps.

Step	Action
1	Open the PCB carrier. Follow the procedure in "Opening the PCB carrier" on page 8.
2	Unplug the fan power connector from the three-pin header on the motherboard, as shown. 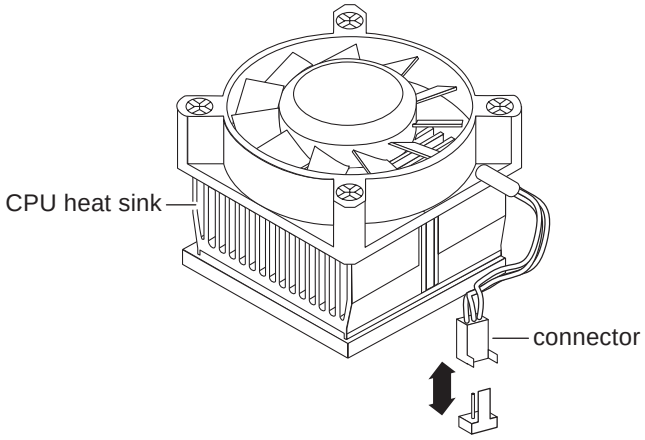

Step	Action
3	Release the clip that secures the CPU fan and heat sink unit to the motherboard. 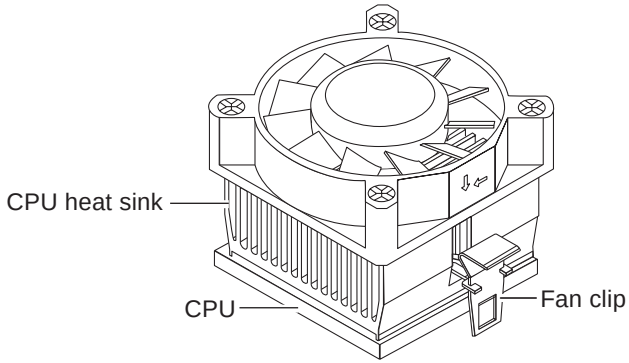
4	Lift the CPU fan and heat sink unit and set it aside.

Installing a CPU fan and heat sink unit

To install a replacement CPU fan and heat sink unit, complete the following steps.

Step	Action
1	Flip down the clip securing the CPU fan and heat sink unit to the motherboard.
2	Plug the CPU fan cable connector into the three-pin header on the motherboard. The connectors are keyed so that they can fit together only one way.
3	Go to “Closing the PCB carrier” on page 40.

Replacing the motherboard lithium battery

About the motherboard lithium battery

Replacing the 3.3V lithium battery on the motherboard consists of the following procedures:

- "Removing the motherboard lithium battery" on page 38
- "Installing the motherboard lithium battery" on page 39

Removing the motherboard lithium battery

To remove the motherboard lithium battery, complete the following steps.

Step	Action
1	Open the PCB carrier. Follow the procedure in "Opening the PCB carrier" on page 8. **Caution** Be sure to wear anantistatic wrist strap and attach the grounding leash to the filer chassis.
2	Lift up the battery toward the open side of the battery holder, as shown. 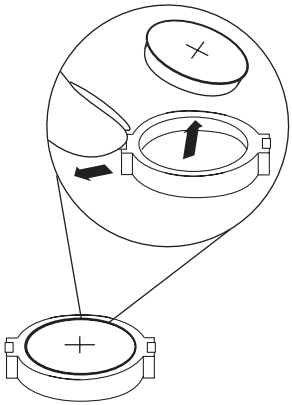

Installing the motherboard lithium battery

To install the motherboard lithium battery, complete the following steps.

WARNING

Danger of explosion if battery is incorrectly replaced. Replace only with the same or equivalent type recommended by the manufacturer. Dispose of used batteries according to manufacturer's instructions.

AVERTISSEMENT

Il y a danger d'explosion s'il y a remplacement incorrect de la pile. Remplacer la pile seulement avec une pile du même type ou d'un type équivalent recommandé par le fabricant. Mettre au rebut les piles usagées selon les instructions du fabricant.

ACHTUNG

Explosionsgefahr bei unsachgemäßem Austausch der Batterie. Die Batterien nur durch denselben oder einen vom Hersteller empfohlenen gleichwertigen Typ ersetzen. Gebrauchter Batterien nach Angaben des Herstellers loswerden.

Step	Action
1	Turn the battery so that the positive side is up (marked with a "+").
2	Push the battery through the open side of the battery holder so that it sits flush inside the battery holder.
3	Go to "Closing the PCB carrier" on page 40.

Closing the PCB carrier

Closing the PCB carrier

To close the PCB carrier, complete the following steps.

Step	Action
1	If you removed the PCB carrier, insert the carrier slide rails evenly and slowly into the slide rails using both hands to support the PCB carrier. There should be no resistance. **Caution** The carrier slide rails must align with the ball bearings along the chassis slide rails; otherwise, the PCB carrier does not go in and the slide rails could be bent permanently.
2	Carefully push the PCB carrier into the chassis. If the PCB carrier is locked in position, press inward on the carrier tabs on each carrier slide rail while pushing the PCB carrier into the chassis.
3	Tighten and then torque the eight thumbscrews on the back panel of the PCB carrier 8 to 10 in.-lbs to prevent access without a tool.
4	Reconnect any cables you removed from the back panel of your filer.
5	Reconnect the power to your filer, and if applicable, your disk shelves.
6	Turn on your disk shelves, if applicable, and then your filer.
7	Interrupt the boot process by pressing the Delete key during the memory test.
8	Run diagnostics by entering the following command at the `ok>` prompt: **`sys-diag`** See the *Diagnostics Guide* for more information.
9	Run the specific diagnostics that apply to the unit you installed or replaced.

Replacing a Chassis Fan 3

About this chapter This chapter provides the procedures for replacing a chassis fan subassembly.

Replacing the chassis fan subassembly

About replacing chassis fan subassemblies

Replacing a chassis fan subassembly consists of the following procedures:

- "Removing a chassis fan subassembly" on page 44
- "Installing a chassis fan subassembly" on page 45

There are three chassis fan subassemblies on an F800 series filer. Each chassis fan subassembly has two fans. The chassis fans are secured to the front of the chassis.

Note

To maintain UL, CSA, and TUV safety certifications, you must obtain replacement chassis fan subassemblies from Network Appliance. Using unapproved replacement chassis fans voids the safety certifications.

Types of F800 chassis fan subassemblies

There are two types of chassis fan subassemblies:

- Chassis fan subassemblies without a duct

  Caution

  This can only be used with the F820 and F840 filers that do not have keyed chassis fan bays.

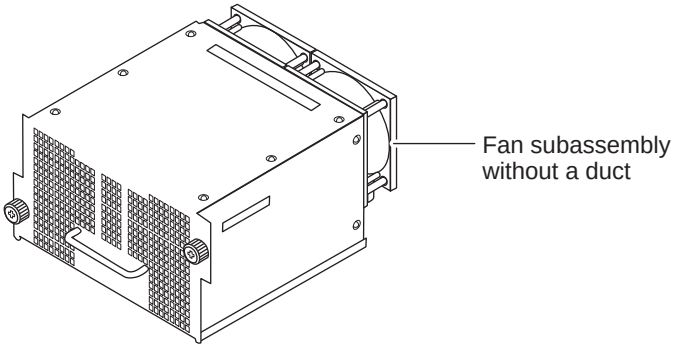

- Chassis fan subassemblies with a duct that can be used on all F800 platforms

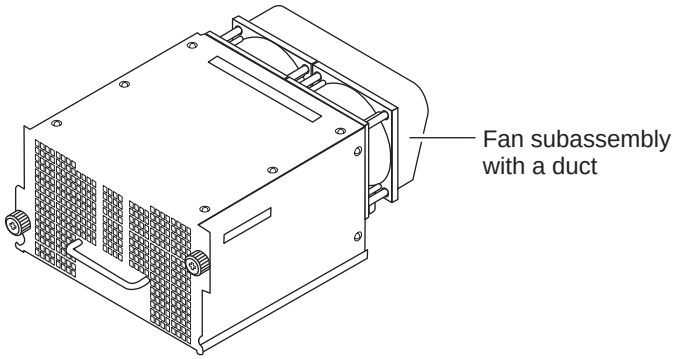

Location of chassis fan subassemblies

The chassis fan subassemblies are behind the front bezel. The following figure shows the chassis fan subassembly locations with the front bezel removed. The sheet metal above the chassis fan subassemblies is silk-screened with the labels Fans 1-2, Fans 3-4, and Fans 5-6.

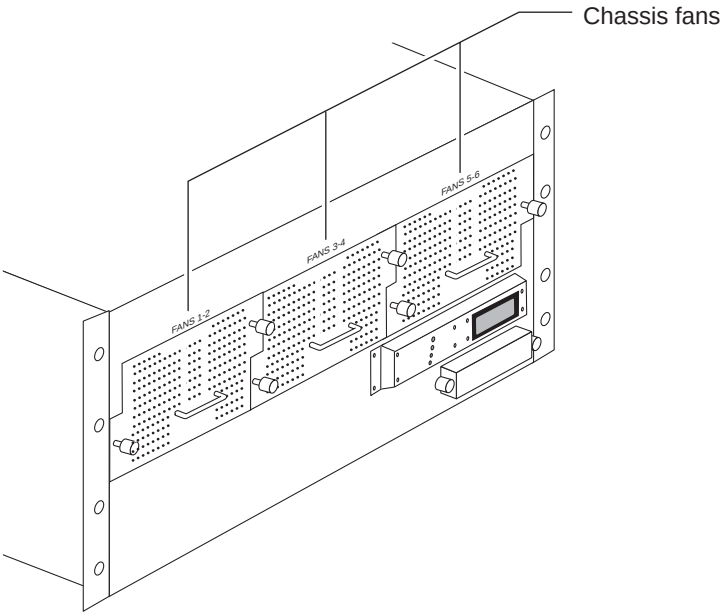

Removing a chassis fan subassembly

To remove a chassis fan subassembly, complete the following steps.

Note

Because the three fan subassemblies are hot swappable, there is no need to shut down the filer.

Step	Action
1	From the console, note the identification of the fan subassembly that failed.
2	Pull the bezel straight off the front panel of your filer by using the grooves on the left and right edges of the bezel. 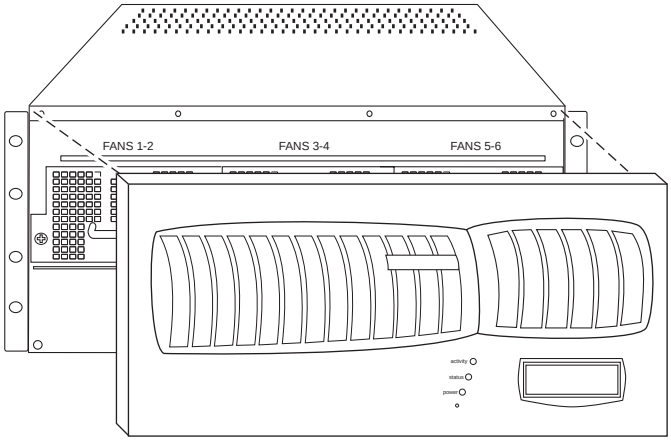
3	Using a #1 Phillips screwdriver, loosen the thumbscrews on the chassis fan subassembly that failed.

Step	Action
4	Using the handle, pull the chassis fan subassembly straight out of the filer chassis. **WARNING** **Use caution when servicing components in the chassis. There is danger of electric shock from hazardous energy on the backplane.** **Note** If the filer is running Data ONTAP™ software, it reports a failure for the removed fan assembly.
5	Set the chassis fan subassembly aside.

Installing a chassis fan subassembly

To install a chassis fan subassembly, complete the following steps.

Step	Action
1	Using the handle, slide the chassis fan subassembly straight into the filer chassis.
2	Tighten and then torque the chassis fan thumbscrews 8 to 10 in.-lbs.
3	Align the pins on the bezel with the holes on the front panel of the filer, then push the bezel straight onto the front panel.
4	Reconnect and turn on the power to the filer.
5	Interrupt the boot process by pressing the Delete key during the memory test.
6	Run diagnostics by entering the following command at the `ok>` prompt: **`sys-diag`** See the *Diagnostics Guide* for more information.
7	Run the diagnostics that apply to the unit you installed or replaced.

Replacing the Power Supply 4

About this chapter

This chapter describes the procedures for replacing the hot swappable power supplies in your F800 series filer.

Note

To maintain UL, CSA, and TUV safety certifications, you must obtain replacement power supplies from Network Appliance.

Replacing the power supply

About replacing the power supply

Replacing a power supply consists of the following procedures:

- "Removing a power supply" on page 48
- "Installing a power supply" on page 50

Caution

The power supplies in F800 series filers are different from the power supplies in F700 series filers. The power supplies are not interchangeable.

Power supply compatibility

Be aware of the following caution regarding the compatibility between the two power supplies in the filer.

Caution

When replacing a power supply, be sure not to mix two different power supplies. The two power supplies in your F800 series filer must have the same part number.

Removing a power supply

To remove a power supply, complete the following steps.

WARNING

To avoid an electric shock hazard, you must disconnect the power supply before removing it from the filer.

Note

Because you have two power supplies that are hot swappable, you do not have to shut down the filer.

Step	Action	
1	From the console or LCD screen, identify the failed power supply. **Note** The power supply identifiers, PS1 and PS2, are silk-screened onto the filer chassis.	
2	Put on anantistatic wrist strap and grounding leash.	
3	**If you have...**	**Then...**
	An AC power supply	**1.** Turn off the switch on the power supply that you are replacing. **2.** Lift up the clip lock and unplug the power cord from the filer/NetCache appliance power supply.
	A DC power supply	**1.** Turn off and unplug the cable to the power supply you are replacing from the power source. **2.** Remove the cover from the power supply terminal block and set it aside. **3.** Using a #2 Phillips screwdriver, remove and save the screws securing the connections to the power supply in the following order: ❖ For positive ground installations: first negative (–), then positive (+), then ground (⏚) ❖ For negative ground installations: first positive (+), then negative (–), then ground (⏚)
4	Loosen the power supply thumbscrews by turning each thumbscrew counterclockwise.	

Step	Action
5	Pull the power supply out of the power supply bay in the filer. **WARNING** **The power supply is heavy. Support the bottom of the unit while removing the unit from its bay.**
6	Set the power supply aside. **Note** If the filer is running Data ONTAP, it reports a failure for the removed power supply.

Installing a power supply

To install a power supply, complete the following steps.

Step	Action
1	Verify that the switch on the power supply is turned off.
2	Slowly and firmly push the power supply into the bay until the power supply is firmly seated in the bay.
3	Secure the power supply by turning the thumbscrew clockwise until it stops.

Step	Action	
4	**If you have...**	**Then...**
	AC power supplies	Plug the power cord into the power cord receptacle on the power supply and secure it with the clip lock.
	DC power supplies	**1.** Using a #2 Phillips screwdriver and the screws you saved, secure the ground (⏚), positive (+), and negative (–) connectors to the power supply, in the following order: ❖ For positive ground installations: first ground (⏚), then positive (+), then negative (–) ❖ For negative ground installations: first ground (⏚), then negative (–), then positive (+) **2.** Cover the power supply terminal block with the cover that you set aside.
5	Turn on the power to the new power supply in your filer.	

Replacing the LED/LCD Subassembly 5

About this chapter This chapter provides the procedures for replacing the LED/LCD subassembly.

Replacing the LED/LCD subassembly

About replacing the LED/LCD subassembly

Replacing the LED/LCD subassembly consists of the following procedures:

- "Removing the LED/LCD subassembly" on page 54
- "Installing the LED/LCD subassembly" on page 56

Removing the LED/LCD subassembly

To remove the LED/LCD subassembly, complete the following steps.

Step	Action
1	Shut down the filer by entering the following command at the console: **`halt`** **Caution** Always use the `halt` command to perform a clean shutdown.
2	Turn off and disconnect the power to your filer.
3	Pull the bezel straight off the front panel of your filer by using the grooves on the left and right edges of the bezel.
4	Put on an antistatic wrist strap and attach the grounding leash to the filer chassis.

Step	Action
5	Use a #1 Phillips screwdriver to remove the four panhead screws that fasten the LED/LCD subassembly to the front panel. Save the screws. 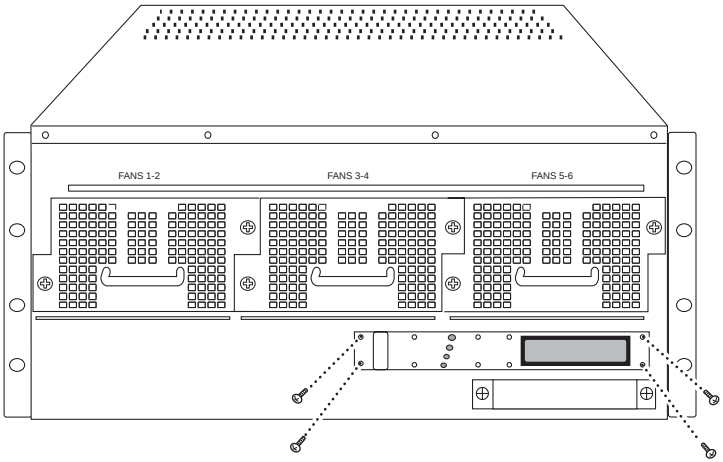
6	Carefully pull the LED/LCD subassembly and the attached cable from the hole in the chassis front panel. 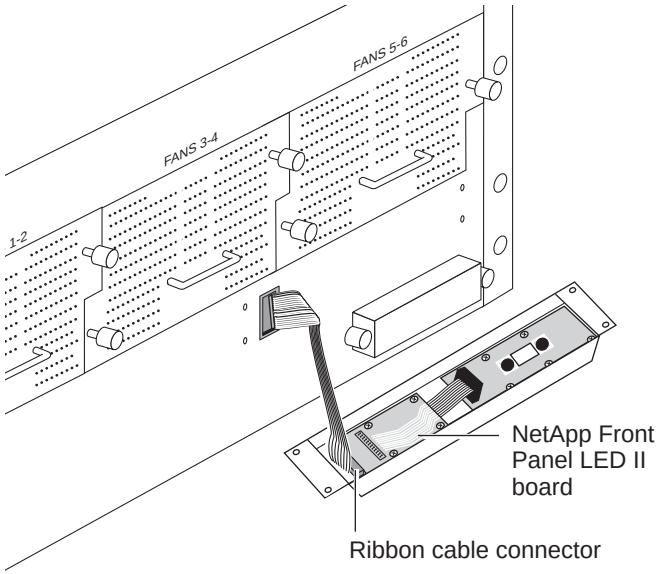

Step	Action
7	Unplug the LED ribbon cable from the JP1 connector.
8	Set the LED/LCD subassembly aside.

Installing the LED/LCD subassembly

To install the LED/LCD subassembly, complete the following steps.

Step	Action
1	Plug the LED ribbon cable into the JP1 connector of the LED/LCD subassembly
2	Feed the cable back into the chassis as you push the LED/LCD subassembly against the chassis front panel.
3	Insert and tighten the four panhead screws to secure the LED/LCD subassembly to the chassis front panel.
4	Align the pins on the bezel with the holes on the front panel of the filer, and then push the bezel straight onto the front panel.
5	Reconnect and turn on the power to your filer.
6	Interrupt the boot process by pressing the Delete key during the memory test.
7	Run diagnostics by entering the following command at the `ok>` prompt: **`sys-diag`** See the *Diagnostics Guide* for more information.
8	Run the diagnostics that apply to the unit you replaced.

Replacing the Diskette Drive Subassembly 6

About this chapter

This chapter describes the procedures for replacing the diskette drive subassembly in an F810, F820, or F840 filer.

Replacing the diskette drive subassembly

About replacing the diskette drive subassembly

Replacing a diskette drive subassembly consists of the following procedures:

- "Removing the diskette drive subassembly" on page 58
- "Installing a diskette drive subassembly" on page 59

Note

Diskette drives are not present in F825 and F880 filers

Removing the diskette drive subassembly

To remove the diskette drive subassembly, complete the following steps.

Step	Action
1	Shut down the filer by entering the following command at the console: **`halt`** **Caution** Always use the `halt` command to perform a clean shutdown.
2	Turn off and disconnect the power to your filer.
3	Pull the bezel straight off the front panel of your filer by using the grooves on the left and right edges of the bezel.
4	Put on an antistatic wrist strap and attach the grounding leash to the filer chassis.
5	Loosen the two thumbscrews on the diskette drive subassembly.
6	Pull the diskette drive subassembly out of the drive bay.

Step	Action
7	Unplug the diskette drive cable connector from the data connector on the back of the diskette drive. 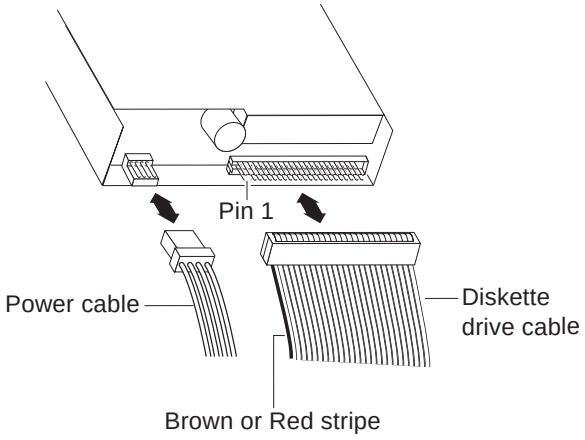
8	Unplug the power cable connector from the power connector on the back of the diskette drive.

Installing a diskette drive subassembly

To install the diskette drive subassembly, complete the following steps.

Step	Action
1	Plug the diskette drive cable connector into the data connector on the back of the replacement diskette drive. The red stripe on the ribbon cable aligns with pin 1 on the connector.
2	Plug the power cable connector into the power connector on the back of the replacement diskette drive.
3	Turn the replacement diskette drive subassembly so that its rails align with the grooves in the drive bay.
4	Slide the diskette drive subassembly into the drive bay.
5	Tighten the two thumbscrews to secure the diskette drive subassembly to the chassis.

Step	Action
6	Align the pins on the bezel with the holes on the front panel of the filer, then push the bezel straight onto the front panel.
7	Reconnect and turn on the power to your filer.
8	Interrupt the boot process by pressing the Delete key during the memory test.
9	Run diagnostics by entering the following command at the `ok>` prompt: **`sys-diag`** See the *Diagnostics Guide* for more information.
10	Run the diagnostics that apply to the unit you installed or replaced.

Replacing the CompactFlash Unit and Reader 7

About this chapter

This chapter describes the procedures for replacing the CompactFlash unit (CompactFlash card and adapter) and CompactFlash reader subassembly in an F825 or F8805 filer.

Topics in this chapter

This chapter provides information about the following topics:

- "Replacing the CompactFlash unit" on page 62
- "Replacing the CompactFlash reader subassembly" on page 64

Replacing the CompactFlash unit

About replacing the CompactFlash unit

Replacing the CompactFlash unit consists of the following procedures:

- "Removing the CompactFlash unit" on page 62
- "Installing a replacement CompactFlash unit" on page 62

Caution

The CompactFlash unit is required for normal filer operation. Remove the CompactFlash unit only when you suspect a failed CompactFlash unit or CompactFlash reader.

Removing the CompactFlash unit

To remove the CompactFlash unit, complete the following steps.

Step	Action
1	Shut down the filer by entering the following command at the console: **`halt`** **Caution** Always use the `halt` command to perform a clean shutdown of the filer. If you do not perform a clean shutdown before removing the CompactFlash unit, your system panics.
2	Turn off the power to your filer.
3	Pull the bezel straight off the front panel of your filer by using the grooves on the left and right edges of the bezel.
4	Push the eject button on the right front of the CompactFlash reader.
5	Pull the CompactFlash unit out of the reader.

Installing a replacement CompactFlash unit

To install and restore the image on a replacement CompactFlash unit, complete the following steps.

Caution

You must purchase preformatted replacement CompactFlash units from Network Appliance. Using non-preformatted CompactFlash units can cause your system to hang at boot.

Step	Action
1	Fully engage the CompactFlash unit by pushing it all the way into the slot on the front of the CompactFlash reader.
2	Reinstall the front bezel by aligning the pins on the bezel with the holes on the front panel of the filer, then pushing the bezel straight onto the front panel.
3	Turn on the power switch to your filer.
4	Interrupt the boot process by pressing the Delete key during the memory test.
5	Run CF card diagnostics by entering the following command at the `ok>` prompt: **`sys-diag`** See the *Diagnostics Guide* for more information.
6	Exit the diagnostics to return to the `ok>` prompt.
7	Boot from hard disk by entering the following command at the `ok>` prompt: **`boot fcal`** **Result:** This causes the system to boot from the hard disk instead of the CompactFlash unit.
8	Update the image on the CompactFlash unit by entering the following command at the filer prompt: **`download`** **Result:** The CompactFlash image is restored using information from the hard disk.
9	Boot from the CompactFlash unit by entering the following command at the filer prompt: **`reboot`**

Replacing the CompactFlash reader subassembly

About replacing the CompactFlash reader subassembly

Replacing the CompactFlash reader subassembly consists of the following procedures:

- "Removing the CompactFlash reader subassembly" on page 64
- "Installing the CompactFlash reader subassembly" on page 66

Removing the CompactFlash reader subassembly

To remove the CompactFlash reader subassembly, complete the following steps.

Step	Action
1	Shut down the filer by entering the following command at the console: `halt` **Caution** Always use the `halt` command to perform a clean shutdown of the filer. If you do not perform a clean shutdown before removing the CompactFlash unit, your system panics.
2	Turn off and disconnect the power to your filer.
3	Put on an antistatic wrist strap and attach the grounding leash to the filer chassis.
4	Remove chassis fans 5-6 to access the CompactFlash reader subassembly cables by following Steps 3 through 5 of the procedure described in "Removing a chassis fan subassembly" on page 44.
5	Using a #2 Philips screwdriver, loosen the two thumbscrews on the CompactFlash reader subassembly.

Step	Action
6	Unplug the CompactFlash reader from the chassis backplane as follows: **1.** Reach into the space previously occupied by chassis fans 5-6. **2.** Partially pull the CompactFlash reader subassembly out of the chassis to access the cables. **3.** Press the latches on either side of the data cable connector to release it from the backplane. **4.** Unplug the power cable from the chassis backplane. **5.** Pull out the cables.
7	Pull the CompactFlash reader subassembly out of the drive bay.
8	Disconnect the data cable and power cable from the back of the CompactFlash reader subassembly and set them aside. 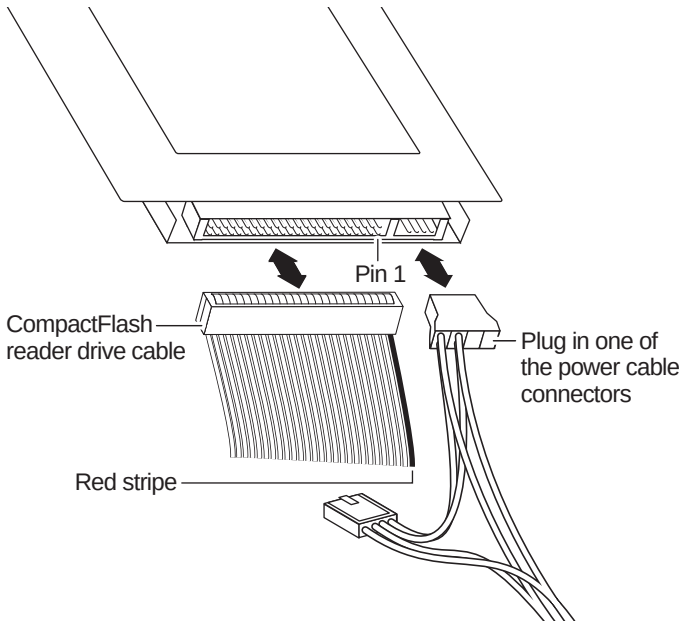

Installing the CompactFlash reader subassembly

To install the CompactFlash reader subassembly, complete the following steps.

Step	Action
1	Connect the data cable that you set aside to the back of the CompactFlash reader subassembly. The data cable is keyed on both ends; either end of the data cable can connect to the back of the CompactFlash reader subassembly.
2	Connect the power cable that you set aside to the back of the CompactFlash reader subassembly. The power cable has two different connectors for connection to the CompactFlash reader. Plug the proper-sized power cable connector into the connector on the back of the CompactFlash reader subassembly.
3	Align the rails of the replacement CompactFlash reader subassembly with the grooves in the drive bay.
4	Partially slide the CompactFlash reader subassembly into the drive bay.
5	Plug the power cable into the chassis backplane power connector.
6	Plug the CompactFlash reader data cable into the chassis backplane 40-pin data connector. The 30-pin data connector is used for diskette drives, which are not used on filers with a CompactFlash reader.
7	Neatly fold the excess slack of the CompactFlash reader data and power cables so that you can install chassis fans 5-6 in the next step without any obstruction.
8	Use the handle on the chassis fan subassembly to slide chassis fans 5-6 into the filer chassis.
9	Tighten and then torque the chassis fan thumbscrews 8 to 10 in.-lbs.
10	Tighten the two thumbscrews to secure the CompactFlash reader subassembly to the chassis.
11	Slide the CompactFlash unit into the slot on the front of the CompactFlash reader.

Step	Action
12	Reinstall the front bezel by aligning the pins on the bezel with the holes on the front panel of the filer, and then pushing the bezel straight onto the front panel.
13	Reconnect and turn on the power to your filer.
14	Verify that the chassis fans are operating.
15	Interrupt the boot process by pressing the Delete key during the memory test.
16	Run CF card diagnostics by entering the following command at the `ok>` prompt: **`sys-diag`** See the *Diagnostics Guide* for more information.

Communications Regulations A

About this appendix This appendix lists the regulatory notices you need to be aware of when installing and operating your Network Appliance equipment.

Regulatory notices

FCC notices (U.S. only)

Network Appliance devices are designed for a CFR 47 (Code Federal Regulations) Part 15 Class A environment.

The FCC and Network Appliance guarantee the user's rights to operate this equipment only if the user complies with the following rules and regulations:

- Install and operate this equipment in accordance with the specifications and instructions in this guide.
- Modify this equipment only in the ways specified by Network Appliance.
- Use shielded cables with metallic RFI/EMI connector hoods to maintain compliance with applicable emissions standards.
- If the system has nine or more fibre channel disk shelves, install the system in two or three NetApp System Cabinets to maintain performance within Part 15 of CFR 47 regulations.

Compliance with Part 15 of CFR 47

This equipment has been tested and found compliant with Part 15 of the CFR 47 rules for Class A digital devices. These rules are designed to provide reasonable protection from interference to electronics equipment operated in a commercial environment.

Operation of this device is subject to the following two conditions:

- This device cannot cause harmful interference.
- This device must accept any interference received, including interference that may cause undesired operation.

Compliance with ICES-003

This Class A digital apparatus complies with Canadian ICES-003.

Cet appareil numérique de la classe A conforme à la norme NMB-003 du Canada.

Compliance with EN regulations

Marking by the symbol CE indicates compliance of this Network Appliance device to the EMC Directive and the Low Voltage Directive of the European Union. Such marking is indicative that this Network Appliance device meets the technical standards listed in "Declaration of Conformity," later in this appendix.

Caution

This is a Class A product. In a domestic environment this product may cause radio interference, in which case the user may be required to take adequate measures.

Bureau of Standards, Metrology, and Inspections notice (BSMI, Taiwan only)

警告使用者:

這是甲類的資訊產品, 在居住的環境中使用時, 可能會造成射頻干擾, 在這種情況下, 使用者會被要求采取某些適當的對策.

Translation of the BSMI notice:

Warning: This is a Class A product. In a domestic environment this product may cause radio interference, in which case the user may be required to take adequate measures.

Voluntary Control Council for Interference by Information Technology Equipment (VCCI, Japan)

この装置は、情報処理装置等電波障害自主規制協議会（ＶＣＣＩ）の基準に基づくクラスＡ情報技術装置です。この装置を家庭環境で使用すると電波妨害を引き起こすことがあります。この場合には使用者が適切な対策を講ずるよう要求されることがあります。

Translation of the VCCI-A notice:

This is a Class A product based on the standard of the Voluntary Control Council for Interference by Information Technology Equipment (VCCI). If this equipment is used in a domestic environment, radio disturbance may arise. If such trouble occurs, the user may be required to take corrective actions.

Declaration of Conformity

Declaration of Conformity

Network Appliance, Inc.
495 East Java Drive
Sunnyvale, CA 94089, U.S.A,

declare under our sole responsibility that the products

Type of equipment	Description	Model number	Year of manufacture
Network File Server	NetApp F810 Filer	F810	2001
Network File Server	NetApp F820 Filer	F820	2000
Network File Server	NetApp F825 Filer	F825	2002
Network File Server	NetApp F840 Filer	F840	2000
Network File Server	NetApp F880 Filer	F880	2001

to which this declaration relates conform to the following standards:

EN 60950:1992, with A1-A4, A11, Information Technology Equipment (Safety)
EN 55022:1998, Emissions Requirements for Information Technology Equipment
EN 50024:1998, Immunity Requirements for Information Technology Equipment
EN 60825-1, Safety of Laser/LED Equipment
IEC 1000-3-2:1995 Limits for Harmonic Current Emissions
IEC 1000-3-3:1994 Limitation of Voltage Fluctuations and Flicker in Low-Voltage Supply Systems

following the provisions of the directives listed below:

73/23/EEC, Low Voltage Directive (Product Safety)
89/336/EEC, Electromagnetic Compatibility Directive

Part number: 210-00155

Index

A

antistatic
- bag 6, 20, 29
- wrist strap 6

audience v

B

batteries
- *See* motherboard lithium battery, NVRAM III battery

boot device vi

C

chassis fans
- identifying 44
- installing 45
- locating 43
- removing 44
- replacing 41

CompactFlash reader subassembly
- data cable 65, 66
- installing 66
- power cable 65, 66
- removing 64
- replacing 61

CompactFlash unit
- installing 62
- removing 62
- replacing 61

CPU fan and heat sink unit
- installing 37
- removing 36
- replacing 36

D

diskette drive subassembly
- data connector 59
- diskette drive cable connector 59
- installing 59
- power cable connector 59
- power connector 59
- removing 58
- replacing 57

E

Expansion 22

expansion adapters
- installing 25
- list of 22
- NICs 3
- removing 23
- replacing 22

F

field replaceable units, list of 2

filer, chassis 9

I

installation of
- chassis fan 45
- CompactFlash reader subassembly 66
- CompactFlash unit 62
- CPU fan and heat sink unit 37
- diskette drive subassembly 59
- expansion adapter 25
- LED/LCD subassembly 56
- motherboard 17
- motherboard lithium battery 39
- NVRAM III battery 34
- NVRAM III DIMM 29
- power supply 50
- SDRAM DIMM 20

L

LED/LCD subassembly
- installing 56
- removing 54
- replacing 53

M

motherboard
- illustrations 12
- installing 17
- removing 15
- replacing 12

motherboard lithium battery
- installing 39
- removing 38
- replacing 38

N

nonconductive surface 15
NOW Web page v
NVRAM III battery
- handling hazards 33
- installing 34
- locating 31
- removing 32
- replacing 31

NVRAM III DIMM
- installing 29
- removing 28
- replacing 28

P

PCB carrier 4
- closing 40
- opening 8

power supply
- installing 50
- removing 48
- replacing 47

primary boot device vi

R

removal of
- chassis fan 44
- CompactFlash reader subassembly 64
- CompactFlash unit 62
- CPU fan and heat sink unit 36
- diskette drive subassembly 58
- expansion adapter 23
- LED/LCD subassembly 54
- motherboard 15
- motherboard lithium battery 38
- NVRAM III battery 32
- NVRAM III DIMM 28
- PCB carrier 10
- power supply 48
- SDRAM DIMM 19

replacement of
- chassis fan 41
- CompactFlash reader subassembly 61
- CompactFlash unit 61
- CPU fan and heat sink unit 36
- diskette drive subassembly 57
- expansion adapter 22
- LED/LCD subassembly 53
- motherboard 12
- motherboard lithium battery 38
- NVRAM III battery 31
- NVRAM III DIMM 28
- power supply 47
- SDRAM DIMM 19

S

SDRAM DIMMs
- installing 20
- removing 19
- replacing 19

slide rails
- alignment of 40
- carrier tabs 9, 40
- PCB carrier 9
- travel distance of 9

special messages vi

T

terminology v
tools and equipment 6