NetApp® Filers

F87 Hardware and Service Guide

Network Appliance, Inc.
495 East Java Drive
Sunnyvale, CA 94089 USA
Telephone: +1 (408) 822-6000
Fax: +1 (408) 822-4501
Support telephone: +1 (888) 4-NETAPP
Documentation comments: doccomments@netapp.com
Information Web: http://www.netapp.com

Part number 215-00766
January 2004

Copyright and trademark information

Copyright information

Copyright © 1994–2004 Network Appliance, Inc. All rights reserved. Printed in the U.S.A.

No part of this book covered by copyright may be reproduced in any form or by any means—graphic, electronic, or mechanical, including photocopying, recording, taping, or storage in an electronic retrieval system—without prior written permission of the copyright owner.

Network Appliance reserves the right to change any products described herein at any time, and without notice. Network Appliance assumes no responsibility or liability arising from the use of products described herein, except as expressly agreed to in writing by Network Appliance. The use and purchase of this product do not convey a license under any patent rights, trademark rights, or any other intellectual property rights of Network Appliance.

The product described in this manual may be protected by one or more U.S. patents, foreign patents, or pending applications.

RESTRICTED RIGHTS LEGEND: Use, duplication, or disclosure by the government is subject to restrictions as set forth in subparagraph (c)(1)(ii) of the Rights in Technical Data and Computer Software clause at DFARS 252.277-7103 (October 1988) and FAR 52-227-19 (June 1987).

Trademark information

NetApp, the Network Appliance design, NetApp–the Network Appliance Company, FAServer, NearStore, NetCache, and WAFL are registered trademarks of Network Appliance, Inc. in the United States and other countries. Network Appliance is a registered trademark of Network Appliance, Inc. in Monaco and a trademark of Network Appliance, Inc. in the United States and Canada. SnapCopy is a registered trademark of Network Appliance, Inc. in the European Union and a trademark of Network Appliance, Inc. in the United States. DataFabric, FilerView, SecureShare, SnapManager, SnapMirror, and SnapRestore are registered trademarks of Network Appliance, Inc. in the United States. Data ONTAP and Snapshot are trademarks of Network Appliance, Inc. in the United States and other countries. ApplianceWatch, BareMetal, Center-to-Edge, ContentDirector, gFiler, MultiStore, SecureAdmin, Serving Data by Design, Smart SAN, SnapCache, SnapDrive, SnapVault, vFiler, and Web Filer are trademarks of Network Appliance, Inc. in the United States.

Apple is a registered trademark and QuickTime is a trademark of Apple Computer, Inc. in the United States and/or other countries.

Microsoft is a registered trademark and Windows Media is a trademark of Microsoft Corporation in the United States and/or other countries.

RealAudio, RealNetworks, RealPlayer, RealSystem, RealText, and RealVideo are registered trademarks and RealMedia, RealProxy, and SureStream are trademarks of RealNetworks, Inc. in the United States and/or other countries.

All other brands or products are trademarks or registered trademarks of their respective holders and should be treated as such.

Network Appliance is a licensee of the CompactFlash and CF Logo trademarks.

Network Appliance NetCache is certified RealSystem compatible.

Table of Contents

Preface v

Safety Information vii

Chapter 1 **Preparing for the Installation**. 1

Required tools, equipment, and documentation 2

Filer dimensions and environmental parameters 5

Chapter 2 **Installing the filer** 9

Installing the filer in a standard equipment rack 10

Installing the filer in other types of equipment racks. 13

Installing a tower system 17

Chapter 3 **Connecting the Filer**. 19

Connecting a third-party SCSI tape backup device 20

Connecting the filer to an Ethernet network 22

Connecting to an Ethernet network through an RJ-45 connection. . . . 23

Connecting to a fiber optic GbE network 24

Connecting the filer to an ASCII terminal console. 25

Chapter 4 **Powering On the System** 27

Connecting the filer to a power source and powering on. 28

Filer startup messages 29

Chapter 5 **Error Messages and Troubleshooting** 33

System messages 34

System beep codes 41

Interpreting LED messages. 44

External LEDs 45

Internal LEDs 48

Chapter 6 **System Maintenance and Servicing** 51
Field-replaceable unit overview 52
Opening the filer 53
Closing the filer. 54
Replacing disk drives 55
Replacing the system fans 57
Replacing power supplies. 59
Replacing DIMMs 61
Installing or replacing expansion adapters 64
Replacing the filer chassis 69

Appendix A **Recommended Power Line Size** 71
Recommended AC power line sizes 72

Appendix B **Communications Regulations**. 73
Regulatory notices 74
Declaration of Conformity 76

Index 77

Preface

About this guide

This guide describes the following tasks and topics:

- How to install an F87 in a:
  - Four-post, square hole, 19-inch equipment rack
  - Two-post equipment rack
  - Double two-post equipment rack
  - Tower system
- How to connect it to a network
- How to start up the system
- How to perform basic troubleshooting
- How to replace field-replaceable units (FRUs)

This guide does not cover basic system or network administration, which is covered in the appropriate Administration Guide.

Audience

This guide is for qualified system administrators and service personnel who are familiar with Network Appliance™ filers and how the Network File System (NFS), Common Internet File System (CIFS), and Hypertext Transfer Protocol (HTTP) protocols are used to share and transfer files.

Terminology

This guide uses the following terms:

- *Filer* refers to an F87 filer.
- *FRU* refers to any field-replaceable unit that is replaceable at the customer site.

Command conventions

You can enter filer commands on the system console or from any client that can obtain access to the filer using a Telnet session. In examples that illustrate commands executed on a UNIX® workstation, the command syntax and output might differ, depending on your version of UNIX.

Formatting conventions

The following table lists different character formats used in this guide to set off special information.

Formatting convention	Type of information
Italic type	◆ Words or characters that require special attention. ◆ Placeholders for information you must supply. For example, if the guide requires you to enter the `fctest` *adaptername* command, you enter the characters “fctest” followed by the actual name of the adapter. ◆ Book titles in cross-references.
`Monospaced` font	◆ Command and daemon names. ◆ Information displayed on the system console or other computer monitors. ◆ The contents of files.
`Bold monospaced` font	Words or characters you type. What you type is always shown in lowercase letters, unless your program is case-sensitive and uppercase letters are necessary for it to work properly.

Special messages

This guide contains special messages that are described as follows.

Note

A note contains important information that helps you install or operate the system efficiently.

Caution

A caution contains instructions that you must follow to avoid damage to the equipment, a system crash, or loss of data.

WARNING

A warning contains instructions that you must follow to avoid personal injury.

Safety Information

Safety rules

All products are Class 1 laser devices. You must follow these safety rules when working with this equipment:

WARNING
Failure to follow these directions could result in bodily harm or loss of life.

- **Switzerland only—for FAS900, GF900, R200, and C6200 systems:** This equipment relies on fuses/circuit breakers in the building installation for overcurrent protection. Each power supply must receive power from a separately dedicated outlet with a 10A fuse/circuit breaker.
- When installing disk shelves and a storage appliance into a movable cabinet or rack, install from the bottom up for best stability.
- DC-based systems must be installed in a restricted access location and the two input power terminals for the DC power supply must be connected to separate isolated branch circuits.
- To reduce the risk of personal injury or equipment damage, allow internal components time to cool before touching them and ensure that the equipment is properly supported or braced when installing options.
- This equipment is designed for connection to a grounded outlet. The grounding type plug is an important safety feature. To avoid the risk of electrical shock or damage to the equipment, do not disable this feature.
- This equipment has one or more replaceable batteries. There is danger of explosion if the battery is incorrectly replaced. Replace the battery only with the same or equivalent type recommended by the manufacturer. Dispose of used batteries according to the manufacturer's instructions.

Warning for units with multiple power cords

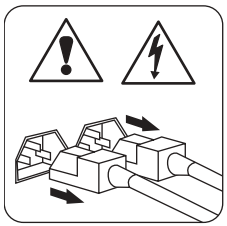

If your storage appliance or disk shelf has multiple power cords and you need to turn the unit off, heed the following warning:

WARNING
This unit has more than one power supply cord. To reduce the risk of electrical shock, disconnect all power supply cords before servicing.

Sicherheits-vorgaben

Alle Produkte sind Lasergeräte der Klasse 1. Die folgenden Sicherheitshinweise sind beim Betreiben des Geräts unbedingt zu beachten:

Vorsicht

Nichtbeachtung dieser Anweisungen kann zu schweren Körperschäden führen oder tödlich sein.

- **Nur für die Schweiz - Systeme FAS900, GF900, R200 und C6200:** Diese Geräte erfordern den Festeinbau von Sicherungen zum Überstromschutz. Jeder Netzanschluss muss mit Strom aus getrennten, speziell für diesen Zweck vorgesehenen Steckdosen versorgt werden, die jeweils mit einer 10A-Sicherung geschützt sind.
- Bei der Montage der Diskettenregale und Archivierungsgeräte, des NetCache™ -Geräts oder des NearStore® -Systems in bewegliche Schränke oder Regale sind die Geräte von unten nach oben einzubauen, um optimale Stabilität zu gewährleisten.
- Gleichstrom-Systeme müssen an Betriebsstaette mit beschraenktem Zutritt installiert sein und die beiden Eingangsstromklemmen für das Gleichstrom-Netzteil müssen an separate und isolierte Abzweigleitungen angeschlossen sein.
- Zum Schutz vor Körperverletzung oder Sachschäden am Gerät lassen Sie die inneren Bauteile stets vor dem Berühren abkühlen. Sorgen Sie dafür, dass das Gerät richtig abgestützt ist oder fest aufrecht steht, bevor Sie neues Zubehör einbauen.
- Dieses Gerät ist für die Einspeisung aus einer geerdeten Netzverbindung ausgelegt. Der Netzstecker mit Erdungsvorrichtung ist ein wichtiger Sicherheitsschutz. Zum Schutz vor elektrischem Schlag oder Sachschäden am Gerät die Erdung nicht abschalten.
- Das Gerät ist mit einer oder mehreren auswechselbaren Batterien ausgestattet. Bei unsachgemäßem Auswechseln der Batterie besteht Explosionsgefahr. Batterien nur mit dem vom Hersteller empfohlenen Typ oder entsprechenden Typen ersetzen. Gebrauchte Batterien sind gemäß den Anweisungen des Herstellers zu entsorgen.

Warnhinweis für Geräte mit mehrfachen Netzanschlussleitungen

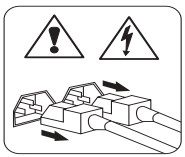

Sollte Ihr Archiviergerät, NetCache-Gerät, NearStore-System oder Diskettenregal mehrfache Netzanschlussleitungen aufweisen und Sie wollen das Gerät abschalten, bitte folgenden Warnhinweis beachten.

ACHTUNG

Gerät besitzt zwei Netzanschlussleitungen. Vor Wartung alle Anschlüsse vom Netz trennen.

Preparing for the Installation 1

About this chapter

This chapter identifies what you need for first-time installation of a NetApp® F87 filer system. It describes the characteristics of the filer you need to consider when installing the system, and the tools you need.

Topics in this chapter

This chapter discusses the following topics:

- "Required tools, equipment, and documentation" on page 2
- "Filer dimensions and environmental parameters" on page 5

Required tools, equipment, and documentation

Equipment you should receive with the filer

In addition to this guide, your filer shipment contains the following components:

- The filer and bezel
- The appropriate number of disk drives, installed in the filer
- A DB-9 to DB-9 straight-through serial cable for your ASCII terminal connection, if ordered
- One, 2M SCSI cable for SCSI tape or other SCSI backup device
- A disposable antistatic grounding leash
- The appropriate rack installation kit, if you ordered your filer for rack installation
- The F87 user manuals

Equipment you should receive for equipment rack installation

The filer can be installed into a standard 19-inch, square hole, four-post equipment rack. It can also be installed in a two-post or four-post, round hole equipment rack. However, these racks must be converted to a 19-inch, square hole, four-post equipment rack before the filer can be installed. The following table lists the components you need to install the filer in a 19-inch, square hole, four-post equipment rack and to convert other equipment racks to the standard rack.

Tools or equipment	**19-inch, square hole, four-post equipment rack installation**	**Two-post equipment rack**	**Double two-post equipment rack**
One pair of slide assemblies	✔	✔	✔
Cable management arm assembly	✔	✔	✔
Fourteen 10-32 by .25 inch pan-head Phillips screws		✔	✔

Tools or equipment	19-inch, square hole, four-post equipment rack installation	Two-post equipment rack	Double two-post equipment rack
Four-post equipment rack adapter brackets			✔
Two-post equipment rack adapter brackets		✔	
Cable tray	✔	✔	✔

Required tools

To install the filer components in an equipment rack or as a tower system, you need the following tools and equipment:

- #2 Phillips screwdriver
- Marker
- Hand level
- Antistatic wrist strap and grounding leash

Caution

The filer has electronic components that are sensitive to static electricity. Static discharge from your clothing or other fixtures can damage these components. Always wear an antistatic wrist strap and grounding leash to prevent static discharge.

Required configuration equipment

To configure your system, you need the following equipment on site:

- ASCII terminal (also referred to as an ANSI terminal)
- Serial console
- Communications server
- Null modem cable (optional if the DB-9 to DB-9 serial cable for an ASCII terminal connection is not compatible with your terminal connector.)

Required documentation

The following table lists documentation you might to help manage the filer.

Document name	When to use
Site Requirements Guide	Use this guide to assist you in preparing your site for your new filer.
System Configuration Guide	Use this guide to determine which NICs are supported by your filer.
Data ONTAP™ System Administrator's Guide	Use this guide to configure your system software.

Filer dimensions and environmental parameters

Installation considerations

When planning your filer installation, you must consider the following:

- Physical characteristics such as height and weight
- Environmental requirements such as temperature and humidity
- Space requirements that you must have around your filer
- Electrical requirements for your filer

Physical characteristics

The following table lists the physical characteristics of the filer.

Characteristic		U.S.	Metric
Height	Tower	17.9 in.	45.5 cm
	Rack mounted	8.6 in.	21.8 cm
Width	Tower	9.05 in.	23.0 cm
	Rack mounted	17.9 in.	48.0 cm
Depth		24.5 in.	62.2 cm
Weight fully loaded		90 lbs	40.8 kg

Environmental requirements

The following table lists the environmental ranges for operation and storage temperatures and humidity.

Environmental condition	Operating range	Storage range
Temperature	50° F to 95° F (10° C to 35° C)	-40° F to 158° F (-40° C to 65° C)
Humidity	85% (noncondensing at 40° C)	95% (noncondensing at 55° C)

Space requirements

The following table lists the recommended minimum clearances for the filer. It assumes that the filer has been extended completely on the slide assemblies, when installed in an equipment rack.

Recommended minimum clearance	U.S.	Metric
Front clearance for cooling		
Tower	6 in.	15.2 cm
19-inch, square hole four-post equipment rack	6 in.	15.2 cm
Two-post equipment rack	6 in.	15.2 cm
Double two-post equipment rack	6 in.	15.2 cm
Rear clearance for cooling		
Tower	12 in.	30.5 cm
19-inch, square hole four-post equipment rack	12 in.	30.5 cm
Two-post equipment rack	19 in.	48.3 cm
Double two-post equipment rack	12 in.	30.5 cm
Front clearance for maintenance		
Tower	12 in.	30.5 cm
19-inch, square hole four-post equipment rack	37 in.	94.0 cm
Two-post equipment rack	45 in.	114.3 cm
Double two-post equipment rack	32 in.	81.2 cm
Rear clearance for maintenance		
Tower	12 in.	30.5 cm
19-inch, square hole four-post equipment rack	19 in.	48.3 cm
Two-post equipment rack	19 in.	48.3 cm
Double two-post equipment rack	12 in.	30.5 cm

Electrical requirements

The following table lists the AC electrical requirements for the filer.

Condition	Requirement
Voltage range	100-120/200-240V
Frequency	50/60 Hz

Power	Rating
Watts	600W (300W per power supply)
Heat dissipation BTU/hr	2,048 BTU/hr maximum

Note

For detailed environmental and electrical information, see the *Site Requirements Guide*.

Installing the filer 2

Types of installation

The following list specifies the types installations you can perform:

- 19-inch, four post, square hole equipment rack
- Other types of equipment racks
- Tower system installation

Topics in this chapter

This chapter covers the following topics:

- "Installing the filer in a standard equipment rack" on page 10
- "Installing the filer in other types of equipment racks" on page 13
- "Installing a tower system" on page 17

Installing the filer in a standard equipment rack

Installing the filer

To install your filer in a standard 19-inch, four-post, square hole equipment rack, complete the following steps, using the figure for reference.

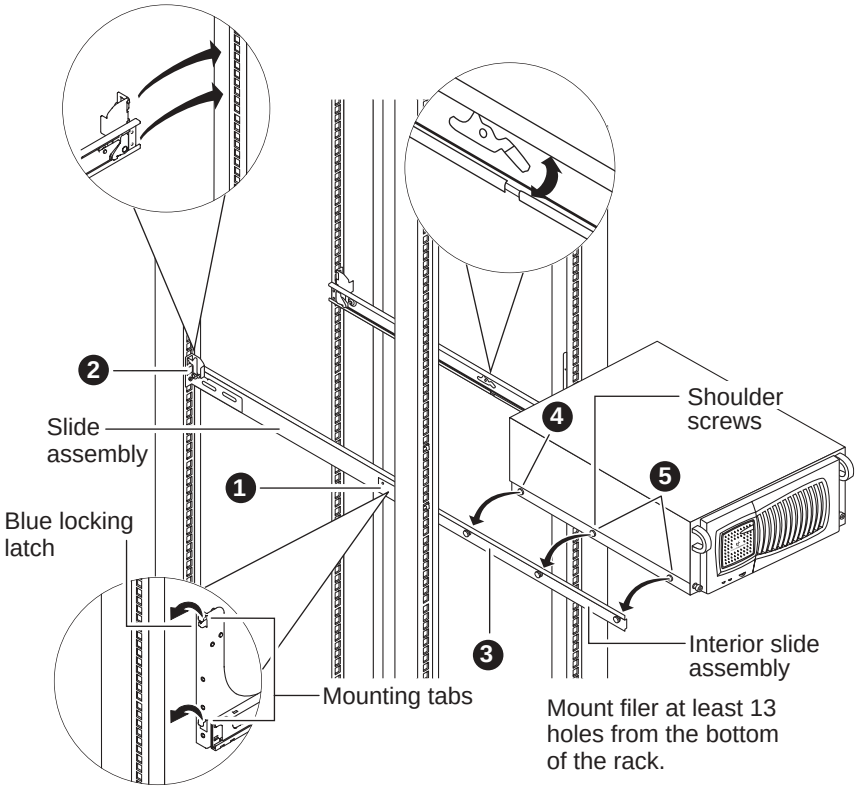

Step	Action
1	Align the mounting tab on the front of the slide assembly with the holes in the rack. Push the assembly forward, then down until the blue lock latch locks into place. **WARNING** **The filer is very heavy. You must use the anti-tip feet of the rack and install the filer at the bottom of the rack to ensure the greatest stability.**
2	Push the back of the slide assembly into the notches on the back of the rack, then push down until the blue latch locks into place.
3	Pull the left and right interior slide assemblies out of the slide assembly until they lock into place.
4	With two people, place one hand on the front-bottom and one hand on the back bottom of the filer and lift it. Tilt the filer slightly to the back, aligning the back-most shoulder screws with the slots in the back of the slide assembly.
5	Slide the filer into the back-most slot on each internal slide assembly, then seat it in the remaining holes in the internal slide assembly.

Step	Action
6	Attach the cable tray to the back of the filer, then attach the end of the cable management arm with the right-angle bracket to the right rear post of the rack. Use the following figure for reference. 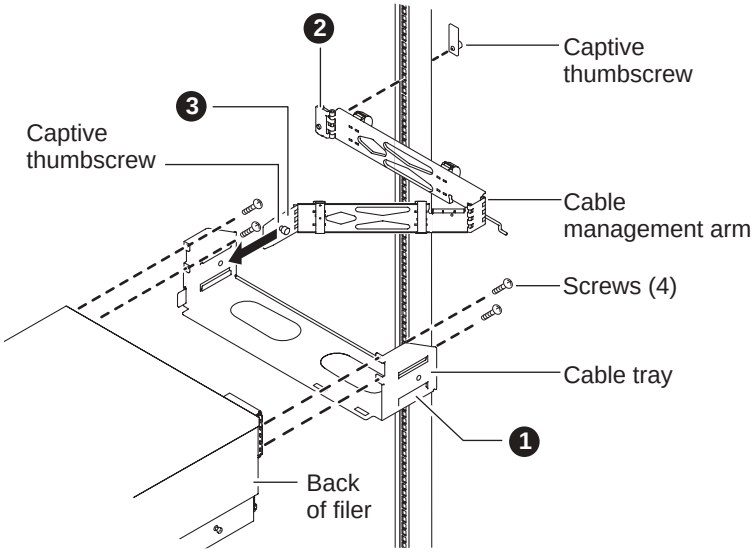
7	Slide the cable management arm into the cable tray and secure it to the cable tray. **Note** The velcro straps on the cable management arm hold the cables in place when the internal slide assembly is slid out of the slide assembly.
8	Go to Chapter 3, "Connecting the Filer," on page 19 for instructions about connecting your filer to a third-party SCSI tape backup device, connecting it to your network, and connecting an ASCII terminal.

Installing the filer in other types of equipment racks

About installing in other types of equipment racks

The slide assemblies that come with your filer rack installation kit can only be installed in a 19-inch, four-post, square hole equipment rack or a rack that has been converted to accept the slide assemblies. This section describes how to convert the following types of equipment racks to accept the slide assemblies:

- Two-post equipment rack
- Double two-post equipment rack

Converting a two-post rack

To convert a two-post equipment rack to a four-post, square hole rack, complete the following steps, using the figure for reference.

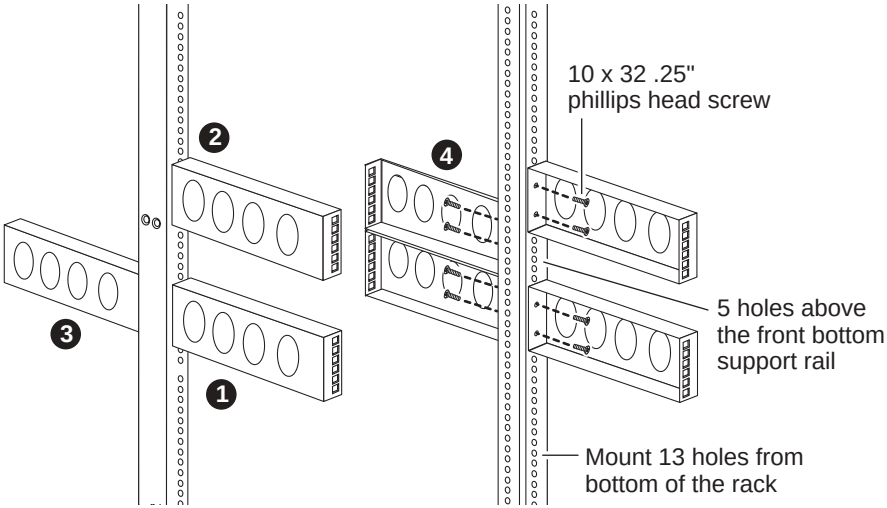

Step	Action
1	Install the front bottom support rail to the front of each post of the two-post equipment rack, at least 13 holes from the bottom of the rack.
2	Install the front top support rail five holes above the bottom support rail on each post of the two-post equipment rack.

Step	Action
3	Install the back bottom support rail in line with the front bottom support rail on each post of the two-post equipment rack.
4	Install the back top support rails directly on top of the bottom rear support rails.
5	Install the slide assemblies and filer, beginning with Step 1 in "Installing the filer in a standard equipment rack" on page 10.

Converting a double two-post rack

To convert a double two-post equipment rack to a four-post, square hole rack, complete the following steps, using the figure for reference.

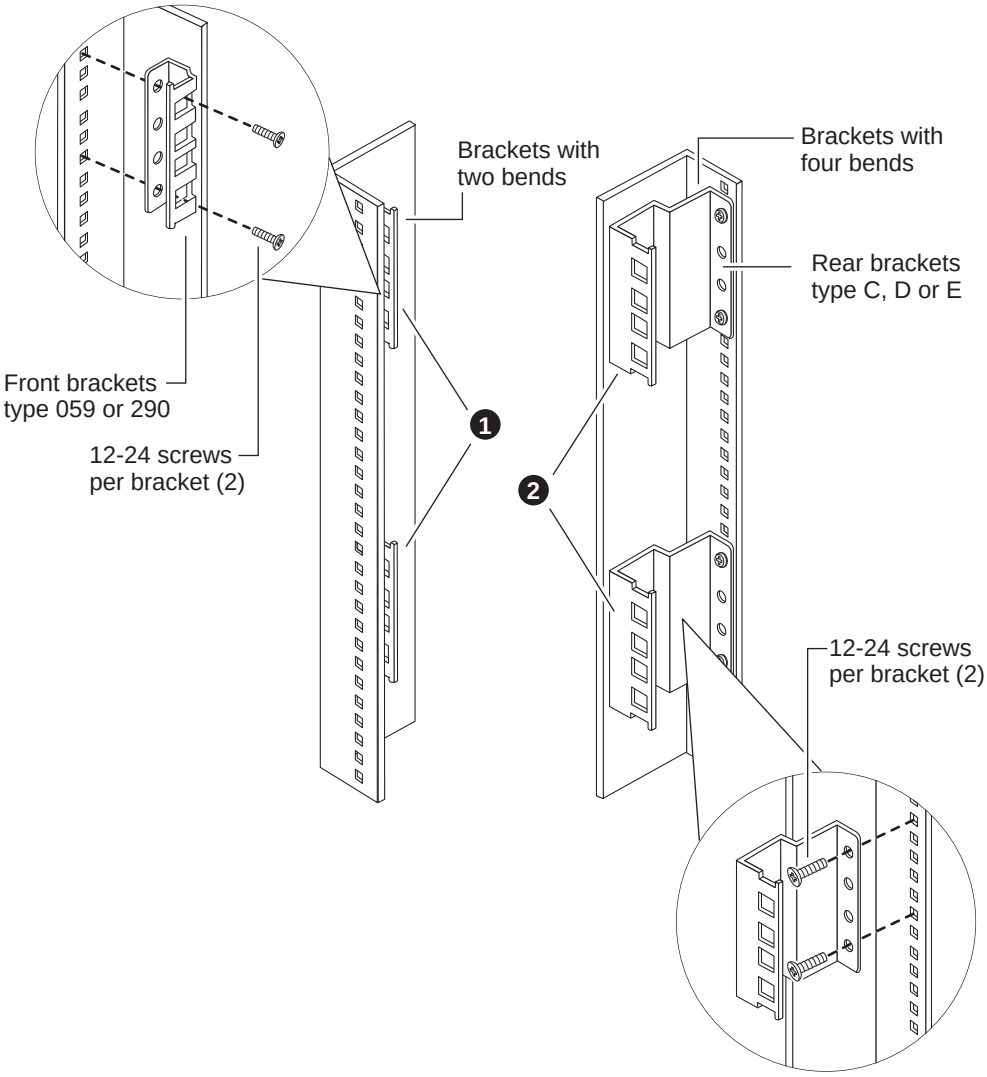

Step	Action
1	Attach the adapter with two bends to the inside of the front rack post, then repeat for the other front post.

Step	Action
2	Attach the adapter with four bends to the inside of the rear post of the rack, then repeat for the other rear post.
3	Install the slide assemblies and filer, beginning with Step 1 in "Installing the filer in a standard equipment rack" on page 10.

Installing a tower system

Installing a tower system

To install your filer as a tower system, complete the following steps.

Step	Action	
1	Prepare the area where you are installing the filer, based on the parameters and information described in the *Site Requirements Guide* and "Filer dimensions and environmental parameters" on page 5.	
2	Connect your filer to a third-party backup storage device, as described in "Connecting a third-party SCSI tape backup device" on page 20.	
3	**If your network is a...**	**Then...**
4	Copper-based Ethernet network	Connect your filer to the network as described in "Connecting the filer to an Ethernet network" on page 23.
	Fiber optic Ethernet network	Connect your filer to the network as described in "Connecting to a fiber optic GbE network" on page 24.
5	Connect your console to the filer, as described in "Connecting the filer to an ASCII terminal console" on page 25.	
6	Connect the power cables to your filer, then plug them into separate power sources and apply power.	
7	Configure your tower system as described in the *Software Setup Guide*.	

Connecting the Filer 3

About this chapter

This chapter discusses how to connect the filer to a third-party SCSI tape backup device, how to connect the filer to a network through several types of Ethernet adapters, and how to connect the filer to an ASCII terminal console.

Topics in this chapter

This chapter discusses the following topic:

- "Connecting a third-party SCSI tape backup device" on page 20
- "Connecting the filer to an Ethernet network" on page 22
- "Connecting the filer to an ASCII terminal console" on page 25

Connecting a third-party SCSI tape backup device

Guidelines for connecting third-party tape backup devices

The following list specifies guidelines for successfully connecting third-party tape backup devices to the filer:

- Check the System Configuration Guide at http://now.netapp.com to verify that your tape backup device is supported. Connecting an unsupported tape backup device can cause your filer to halt.
- Use the appropriate type and length cable for the tape backup device. The maximum cable length supported by the SCSI adapter is 2 meters.

Connecting a third-party SCSI tape backup device

To connect a third-party SCSI tape backup device to the filer, complete the following steps, using the figure for reference.

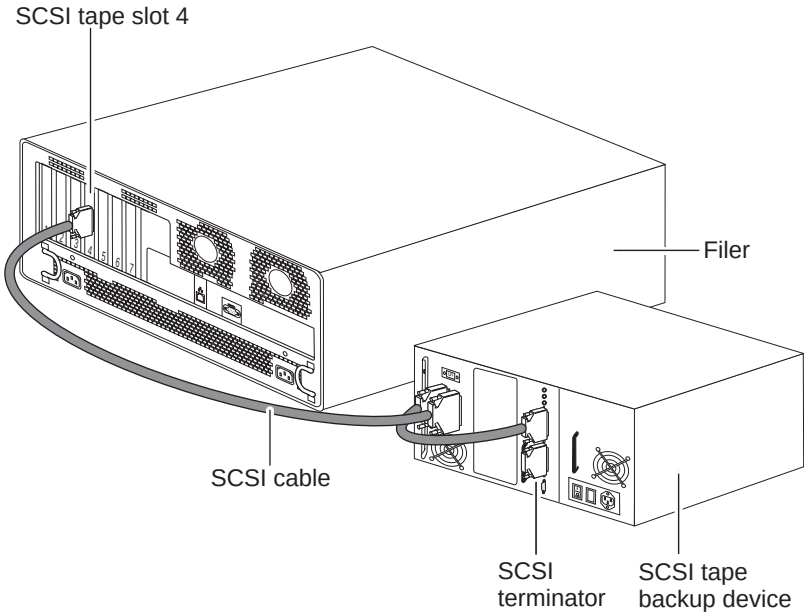

Step	Action
1	If your filer is running, shut it down using the following command: `halt`

Step	Action
2	Turn off the power to your filer and unplug it from all power sources.
3	Set the SCSI ID on the tape backup device. See the device documentation for instructions about how to set the tape backup ID. **Note** Do not use SCSI ID 7 for the device because it is reserved for the SCSI host adapter.
4	Set the ID of your robotic loader for the tape backup device, then go to Step 5. If you do not have a robotic loader, go to Step 5.
5	Connect one end of the SCSI cable to the top SCSI adapter port in slot 4 of the filer, then connect the other end of the cable to the input port on the tape backup device.
6	Tighten the thumbscrews on the cable ends.
7	Terminate any open ports on the tape backup device with an active SCSI terminator.

Connecting the filer to an Ethernet network

Supported Ethernet connections

The filer has one onboard 10Base-T/100Base-TX Ethernet port. It also supports the following Ethernet network interface cards (NICs):

- Quad-port 10Base-T/100Base-TX NIC
- 10Base-T/100Base-TX/1000Base-T Gigabit Ethernet (GbE) NIC, with an RJ45 connection
- GbE NIC, with a fiber optic connection

Note

See the System Configuration Guide at http://now.netapp.com for slot assignments.

Cabling requirements

The following table lists the cabling requirements for Ethernet connections.

Ethernet port	Type of cable used	Max. distance
10 Base-T/ 100Base-TX	Category 3 (10Base-T only) or 5 (10Base-T/100Base-TX) unshielded twisted-pair (UTP) cable with RJ-45 connectors	100m
10Base-T/100Base-TX/1000Base-T GbE	Category 5 UTP cable with RJ-45 connector for the copper GbE adapter only.	100m
GbE fiber optic connection	50 micron multimode fiber optic cable, SC connector	550m
	62.5 micron multimode fiber optic cable, SC connector	220m

Connecting to an Ethernet network through an RJ-45 connection

Connecting through an RJ-45 connection

To connect the filer to a 10Base-T/100Base-TX or 10Base-T/100Base-TX/1000Base-T Ethernet network, complete the following step.

Step	Action
1	Push the RJ-45 connector into the Ethernet port until it clicks and locks into place. The following figure shows a UTP cable with an RJ-45 connector connecting to a 10Base-T/100Base-TX/1000Base-T NIC. 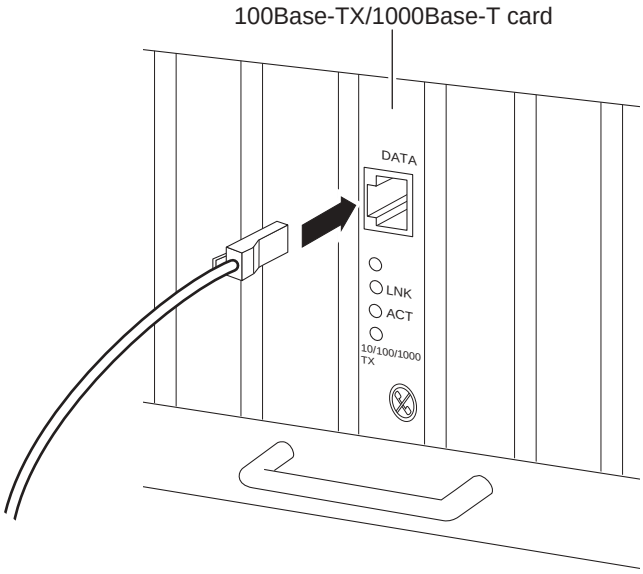

Connecting to a fiber optic GbE network

Connecting through a fiber optic connection

To connect the filer to a fiber optic GbE network, complete the following step.

Step	Action
1	Push the fiber optic cable with the SC connector into the ports on the NIC, until it clicks and locks into place. 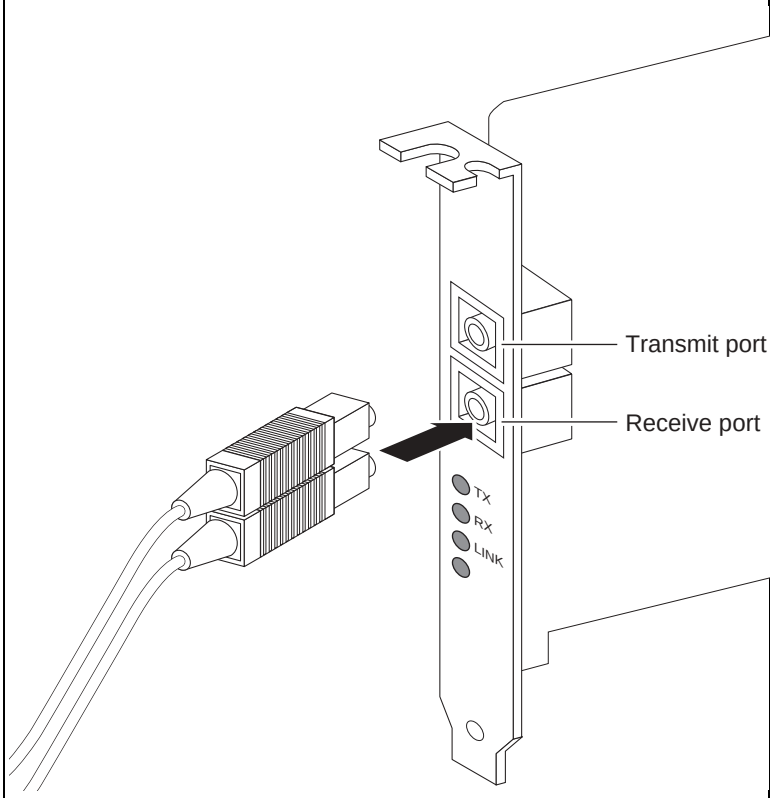

Connecting the filer to an ASCII terminal console

About the ASCII terminal console

The ASCII terminal console enables you to monitor the boot process and helps you configure the filer after it boots. You must use an ASCII terminal attached through the serial port on the back of the filer if you want to do local system administration.

Note

Make sure that you are using an ASCII terminal console attached to the filer serial port, and that the display length is set to 25 lines.

ASCII terminal console cable wiring

The ASCII terminal console is connected to the filer with a DB-9 serial cable, through the serial port on the back of the filer. The following table lists how the DB-9 serial cable is wired. Input indicates data flow from the ASCII terminal to the filer and output indicates data flow from the filer to the ASCII terminal.

Pin number	Signal	Data flow direction	Description
1	DCD	Input	Data carrier detect
2	SIN	Input	Serial input
3	SOUT	Output	Serial output
4	DTR	Output	Data terminal ready
5	GND	N/A	Signal ground
6	DSR	Input	Data set ready
7	RTS	Output	Request to send
8	CTS	Input	Clear to send
9	RI	Input	Ring indicator

Connecting to an ASCII terminal console

To connect an ASCII terminal console to the filer, complete the following steps.

Step	Action	
1	Set the following communications parameters to the same values for both the filer and ASCII terminal.	
	Parameter	**Setting**
	Baud	9600
	Data bit	8
	Parity	None
	Stop bits	1
	Flow control	None
	Note See your terminal documentation for information about changing your ASCII console terminal settings.	
2	Connect the DB-9 serial cable to the console port on the filer and to the ASCII terminal.	
3	Set the console display line length to exactly 25 lines.	

Where to go next

After you connect the tape backup devices to your system and connect the system to your network, you are ready to apply power, as described in Chapter 4, "Powering On the System," on page 27.

Powering On the System

4

About this chapter

This chapter describes how to prepare the filer for initial power on and what to expect when you apply power to your filer.

Topics in this chapter

This chapter discusses the following topics:

- "Connecting the filer to a power source and powering on" on page 28
- "Filer startup messages" on page 29

Connecting the filer to a power source and powering on

Connecting the filer to a power source

To connect the filer to a power source, complete the following steps.

Step	Action
1	Plug one end of a power supply cord into each power supply inlet connector, then plug the other end into grounded electrical outlets on separate AC circuits.
2	Press the power button on the front of the filer.
3	Observe the bezel LEDs during boot. See "Interpreting LED messages" on page 44 for LED descriptions if your LEDs do not match the following list: ◆ Activity—flashing green, indicating the disk drives are being accessed. ◆ Fault—Off. ◆ Power—Green, indicating the system has power. **Note** You should also check that the LEDs on the power supplies are green. To see these LEDs, you must remove the bezel.
4	Observe the networking status LEDs on the back of the filer during boot. The LEDs should be like the following list: ◆ Network connectivity—Green, indicating the filer is connected to the network. ◆ Network communication—flashing amber, indicating network access.
5	Observe the startup messages for errors. See "Filer startup messages" on page 29 for an example of a normal boot. If you encounter an error message during boot, see "Error Messages and Troubleshooting" on page 33 for corrective actions.

Filer startup messages

Startup sequence

When you apply power to the filer, it verifies which hardware is attached to the system, loads the operating system, and displays two types of startup messages on the console:

- Power-On Self-Test (POST) messages
- Boot messages

POST messages

Power-On Self-Test (POST) is a series of tests run from the motherboard PROM. These tests check the hardware on the motherboard and differ depending on your system configuration. The following series of messages are examples of POST messages displayed on the console.

Header:

```
Phoenix ROM BIOS PLUS Version 1.1 C01
Copyright 1985-1988 Phoenix Technologies Ltd.
Copyright 2001 Network Appliance, Inc.
All Rights Reserved

Network Appliance, Inc.
www.netapp.com
```

POST messages:

```
Memory Test.....  Please wait.

   Embedded server management firmware revision 5.42
   Primary system backplane controller firmware revision 1.29
   System Peripheral Bay firmware revision 5.49

One 1.3 GHz Processor, Processor Bus: 133 MHz, L2 cache: 256K
Advanced
```

```
Adaptec AIC-7899 SCSU BIOS Build 25308
(c) 1999 Adaptec, Inc. All Rights Reserved.

    Press <Ctrl><A> for SCSISelect(tm) Utility!

Ch A,  SCSI ID: 0 SEAGATE  ST318404LC        160
       SCSI ID: 1 NETAPP   X221_DDYS-T18350  160
       SCSI ID: 2 NETAPP   X221_DDYS-T18350  160
       SCSI ID: 3 NETAPP   X221_DDYS-T18350  160
       SCSI ID: 6 DELL     1x6 U2W SCSI BP   ASYN
Ch B,  SCSI ID: 0 NETAPP   X221_DDYS-T18350  160
       SCSI ID: 1 NETAPP   X221_DDYS-T18350  160
       SCSI ID: 6 DELL     1x2 U2W SCSI BP   ASYN
Adaptec SCSI Card 39160  BIOS v2.57.2
(c) 2000 Adaptec, Inc. All Rights Reserved.

    Press <Ctrl><A> for SCSISelect(tm) Utility!
.
.
.
The PnP system BIOS installs CSA-648U devices as:
   SanDisk SDCFB-32                          30 MB installed as 80h
```

Boot messages

After POST is successfully completed, the filer loads the operating system. The following message is an example of the boot message that appears on the system console at first system boot. The exact boot messages that appear on your system console depend on your system configuration.

```
GRUB Loading stage2......

GRUB  version 0.5.96.1  (640K lower / 261056K upper memory)

+-------------------------------------------------------------+
```

```
| Data ONTAP                                                    |
| Data ONTAP Recovery Kernel (backup)                           |
| Load Service Menu                                             |

.
.
.
.
Booting 'Data OnTAP'


root   (hd0,0)
Filesystem type is fat, partition type 0x11
kernel /x86/kernel/primary.krn booted-from=C:
[NetBSD-a.out, loadaddr=0x200000, text=0x25c0, C, data=0x413a20,
bss=0x0, entry=0x200000]


Press CTRL-C for special boot menu

Starting
.................................................................
....


NetApp Release Rvb: Tue Aug 700:04:35 EDT 2001
Copyright (c) 1992-2001 Network Appliance, Inc.
Starting boot on Wed Aug  8 23:18:45 GMT 2001
.
.
.
toaster4> Wed Aug  8 19:19:08 EDT [console_login_mgr:info]: root
logged in from console
```

Where to go next

You are now ready to install software on the filer and configure it for use. Go to the *Software Setup Guide* for information about configuring Data ONTAP on your filer.

Error Messages and Troubleshooting 5

About this chapter

This chapter provides information about how to troubleshoot the filer hardware through system error messages displayed on the ASCII terminal console. This section lists and describes error messages you might encounter during filer operation. This section also contains corrective action for each listed error.

Topics in this chapter

This chapter discusses the following topics:

- "System messages" on page 34
- "System beep codes" on page 41
- "Interpreting LED messages" on page 44

System messages

About system messages

The system error messages identify conflicts between the hardware and software, or potential operating system problems encountered during boot or operation.

Interpreting system messages

The following table lists the system error messages you might see, provides a brief explanation of what the error message means, and lists the corrective action you need to take to correct the problem.

Error message	Description	Corrective action
`Address mark not found`	Faulty hard disk drive subsystem (defective system board).	Call NetApp Customer Support.
`Alert! Maximum memory size exceeded. Limiting memory size to 4 GB`	System supports up to 256 MB of memory.	Remove one or more DIMM so that the total memory is 256 MB. See "Replacing DIMMs" on page 61.
`Alert! Single-bit memory error previously detected in xxxx xxxxh`	Improperly seated or faulty DIMM.	Replace DIMM with a type supported by NetApp. See "Replacing DIMMs" on page 61.
`Alert! Previous processor thermal failure`	The CPU exceeded operating temperature.	Call NetApp Customer Support.
`Alert! Primary processor is out of rev.`	The system detected that the primary processor is not the correct revision (defective system board).	
`Alert! Processor thermal probe failure detected`	Faulty processor or defective system board.	
`Alert! Secondary processor is out of rev.`	The filer supports only one processor.	

Error message	Description	Corrective action
`Alert! Uncorrectable memory error previously detected in xxxx xxxxh`	Improperly seated or faulty memory modules.	Remove and reseat the DIMMs. If the problem persists, replace the DIMMs. See "Replacing DIMMs" on page 61.
`Alert! Unsupported memory in DIMM slot(s) n.`	Unsupported memory module or modules installed in the specified slot.	Replace one or more DIMM so that all DIMM pairs are the same type. See "Replacing DIMMs" on page 61.
`Attachment failed to respond`	Hard disk drive controller cannot send data to associated drive (defective system board).	Call NetApp Customer Support.
`Auxiliary device failure`	Defective system board.	
`Bad command or file name`	Command entered does not exist, is faulty, or is not in the path name specified.	Use the correct command syntax or the correct file name.
`Bad error-correction code (ECC) on disk read` `Controller has failed`	Defective system board.	Call NetApp Customer Support.
`Boot: Couldn't find NTLDR`	A boot problem was encountered.	
`CPUs with different level 2 cache sizes detected`	Two CPU configurations are not supported.	Remove the second CPU or call NetApp Customer Support.
`Data error`	Faulty hard disk drive.	Replace the hard disk drive. See "Replacing disk drives" on page 55.
`Decreasing available memory`	One or more DIMM improperly seated or faulty.	Remove and reseat the DIMM. If the problem persists, replace the DIMM. See "Replacing DIMMs" on page 61.

Error message	Description	Corrective action
`Diskette drive 0 seek failure`	Improperly configured BIOS.	Call NetApp Customer Support.
`Diskette read failure`		
`Diskette subsystem reset failed`		
`Embedded server management error` `Embedded server management is not present`	Embedded server management memory might be temporarily corrupted.	Shut down the system to clear the memory, then restart the system. If the problem persists, call NetApp Customer Support.
`Gate A20 failure`	Defective system board.	Call NetApp Customer Support.
`General failure`	Operating system corrupted or not installed properly.	Power cycle the filer. If the problem persists, call NetApp Customer Support.
`Hard disk controller failure`	Incorrect configuration settings in System Setup program, improperly connected hard disk drive, or faulty hard disk drive controller subsystem (defective system board).	Call NetApp Customer Support.
`Invalid configuration information - please run SETUP program`	Incorrect configuration settings in System Setup program, or faulty battery.	Check the System Setup configuration settings. Call NetApp Customer Support.
`Invalid CPU speed detected`	Microprocessor not supported by system.	Call NetApp Customer Support.
`Invalid NVRAM configuration, resource reallocated`	System detected and corrected a resource conflict when system resources were allocated using the System Setup program.	No action is required.
`I/O parity interrupt at address`	Expansion card improperly installed or faulty.	Reinstall the expansion card. If the problem persists, replace the expansion card. See “Installing or replacing expansion adapters” on page 64.

Error message	Description	Corrective action
`Keyboard controller failure`	Defective system board.	Call NetApp Customer Support.

`Keyboard failure`
`Keyboard data line failure`
`Keyboard stuck key failure`		

`Memory address line failure at address, read value expecting value`
`Memory double word logic failure at address, read value expecting value`
`Memory odd/even logic failure at address, read value expecting value`
`Memory write/read failure at address, read value expecting value`
	Faulty or improperly seated DIMM or defective system board.	Remove and reseat the DIMM. If the problem persists, replace the DIMMs. See "Replacing DIMMs" on page 61. If the problem still persists, call NetApp Customer Support.

`Memory allocation error Faulty application Restart the application. Memory parity interrupt at address`	Improperly seated or faulty memory modules.	Remove and reseat the DIMMS. If the problem persists, replace the DIMMs. See "Replacing DIMMs" on page 61.
`Memory tests terminated by keystroke`	POST memory test terminated by pressing the spacebar.	No action is required.

Error message	Description	Corrective action
`No boot device available`	One of the following situations is detected: ◆ NVRAM 4 adapter is not detected or is damaged. ◆ The CompactFlash™ card is not found or has a corrupted boot image. ◆ BIOS Setup is not configured correctly.	Verify that all hardware is properly installed. If the problem persists, call NetApp Customer Support.
`No boot sector on hard-disk drive`	Incorrect configuration settings in System Setup program, or no operating system on hard disk drive.	Verify that the hard disk drive System Setup information is correct. If the problem persists, replace the NVRAM 4 adapter, as described in "Installing or replacing expansion adapters" on page 64.
`No timer tick interrupt`	Defective system board.	Call NetApp Customer Support.
`Non-system disk or disk error`	Faulty hard disk drive subsystem.	Verify that all hardware is properly installed. If the problem persists, call NetApp Customer Support.
`Not a boot diskette`	Defective system board.	Call NetApp Customer Support.
`Processor in socket 1 not installed!`		
`Read fault Requested sector not found`	Faulty hard disk drive subsystem (defective system board).	Replace the NVRAM 4 adapter, as described in "Installing or replacing expansion adapters" on page 64.
`Reset failed`	Improperly connected hard disk drive or power cable.	Check that the hard disk drive carriers and the power connector are all properly connected to the SCSI backplane board. Reinstall the hard disk drive. Check all cable connections to the SCSI backplane board.

Error message	Description	Corrective action
`ROM bad checksum = address`	Expansion card improperly installed or faulty.	Reinstall the expansion card. If the problem persists, replace the expansion card. See "Installing or replacing expansion adapters" on page 64. If the problem persists, call NetApp Customer Support.
`Sector not found`	Defective system board.	Call NetApp Customer Support.
`Seek error`		
`Seek operation failed`		
`Shutdown failure`		
`System backplane cable error`	Improperly attached interface cables.	Check the primary and secondary SCSI interface cable connections to the SCSI backplane board. If the problem persists, call NetApp Customer Support.
`System backplane error`	Improperly attached or missing backplane.	Check the interface cable connections to the backplane board. If the problem persists, call NetApp Customer Support.
`Time-of-day clock stopped`	Defective battery or faulty chip (defective system board).	Call NetApp Customer Support.
`Time-of-day not set - please run SETUP program`	Incorrect Time or Date settings or defective system battery Check the Time and Date settings.	See the *Software Setup Guide* for instructions. If the problem persists, call NetApp Customer Support.
`Timer chip counter 2 failed`	Defective system board.	Call NetApp Customer Support.

Error message	Description	Corrective action
`Unexpected interrupt in protected mode`	Improperly seated memory modules or faulty keyboard/mouse controller chip set (defective system board).	Remove and reseat the DIMMs. If the problem persists, replace the DIMMs. See "Replacing DIMMs" on page 61. If the problem persists, call NetApp Customer Support.

`Unsupported CPU detected in Socket n`
 	
`Unsupported CPU speed detected!`
	Microprocessor not supported by system.	Install a correct version of the microprocessor in the specified microprocessor socket. If the problem persists, call NetApp Customer Support.

`Unsupported CPU speed in CMOS`	Microprocessor not supported by BIOS.	Call NetApp Customer Support.
`Unsupported DIMM installed in the RAID DIMM slot!`	RAID memory module not supported by system.	
`Unsupported RAID key detected!`	RAID hardware key not supported by system.	
`Utility partition not available`	<F10> was pressed during boot, but no utility partition exists on the boot hard disk drive.	Power cycle the filer and do not touch the keyboard during boot. The utility partition is not supported,
`Warning! Detected mode switch from RAID to SCSI on the onboard RAID channel. Data loss will occur! Press Y to confirm the change; press any other key to cancel.`	Defective system board.	Call NetApp Customer Support.
`Write fault` `Write fault on selected drive`	Faulty hard disk drive.	Replace the hard disk drive. See "Replacing disk drives" on page 55.

System beep codes

About system beep codes

The filer emits a series of beeps when an error is encountered that cannot be displayed on the system console. These beeps are sounded in a grouping of three beeps, with a pause between each grouping. For example, you might hear a single beep, followed by pause, another beep, followed by a pause, then three beeps.

Interpreting system beep code messages

The following table lists the system beep code messages you might encounter, provides a brief explanation of what the error message means, and lists the corrective action you need to take to correct the problem.

Beep code	Description	Corrective action
1-1-3	Defective system board.	Call NetApp Customer Support.
1-1-4		
1-2-1		
1-2-2		
1-2-3		
1-3-1	Main-memory refresh verification failure	Remove and reseat the DIMMs. If the problem persists, replace one or more DIMM. See "Replacing DIMMs" on page 61. If the problem persists, call NetApp Customer Support.

Beep code	Description	Corrective action
1-3-2	No memory installed	Remove and reseat the DIMMs. If the problem persists, replace the DIMMs. See "Replacing DIMMs" on page 61. If the problem persists, call NetApp Customer Support.
1-3-3	Chip set or data line failure in the first 64 KB of main memory	
1-3-4	Odd/even logic failure in the first 64 KB of main memory	
1-4-1	Address line failure in the first 64 KB of main memory	
1-4-2	Parity failure in the first 64 KB of main memory	
2-1-1 to 2-4-4	Bit failure in the first 64 KB of main memory	
3-1-1	Defective system board.	Call NetApp Customer Support.
3-1-2		
3-1-3		
3-1-4		
3-2-4		
3-3-1		
3-3-2		
3-3-3		
3-3-4		
3-4-2		
3-4-3		
4-2-1		
4-2-2		

Beep code	Description	Corrective action
4-2-3	Defective system board.	Call NetApp Customer Support.
4-2-4		
4-3-1	Improperly seated or faulty DIMMs	Remove and reseat the DIMMs. If the problem persists, replace the DIMMs. “Replacing DIMMs” on page 61. If the problem persists, call NetApp Customer Support.
4-3-3	Defective system board.	Call NetApp Customer Support.
4-3-4		
4-4-1		
4-4-2		
4-4-3		
4-4-4		

Interpreting LED messages

About the LEDs

There are two sets of LEDs that provide you with basic information about how your system is running. These sets are described in the following table.

LED location	Basic information given
External LEDs ◆ LEDs visible on the front of the filer with the bezel in place ◆ LEDs visible on the back of the filer	Provide high-level system status at a glance, along with network activity.
Internal LEDs, behind the bezel	Provide status about individual components, such as power supplies and disk drives. These components are hidden by the bezel.

For detailed information

For detailed information about the LEDs, see the following sections:

- "External LEDs" on page 45
- "Internal LEDs" on page 48

External LEDs

LEDs visible from the front of the filer

The following figure and table shows and describes the LEDs visible from the front of the filer.

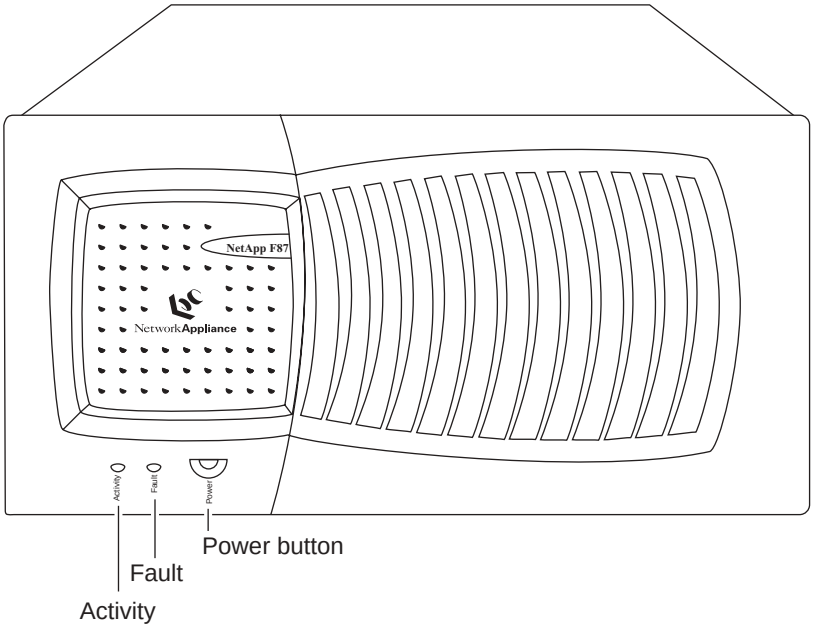

LED label	Status indicator	Description
Activity	Blinking green	The system is active.
	Off	There is no activity on the system.
Fault	Green	The system is functioning properly.
	Blinking amber	A system component failed.
Power	Green	The system is receiving power.
	Off	The power to the system is off.

LEDs visible from the back of the filer

The following figure and table shows and describes the LEDs visible from the back of the filer. These LEDs are located on the on-board Ethernet port.

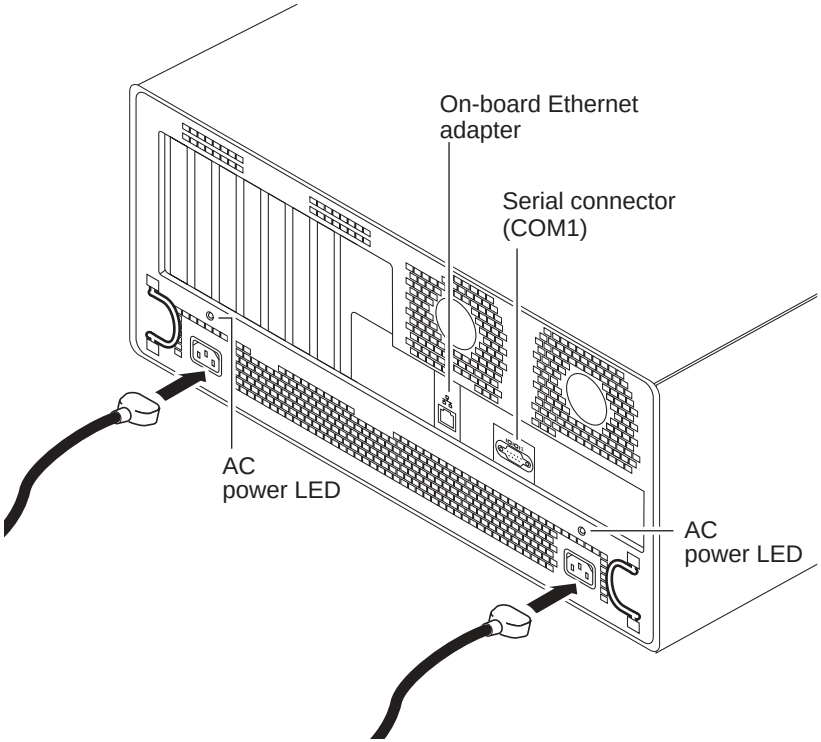

Indicator type	Status indicator	Description
Network connectivity	Green	The filer is connected to the network.
	Off	There is no network connection present.
Network communication	Blinking amber	Data is being transmitted across the network to and from the filer.
	Off	There is no network activity present.

Indicator type	Status indicator	Description
AC power LED	Green	The AC power source is good and is powering the system.
	Blinking green	The AC power source is good, but is not powering the system.
	Off	There is no AC power on this power cord.

Internal LEDs

LEDs visible on the disk drives

The following figure and table shows and describes the disk drive LEDs that are visible after you remove the bezel.

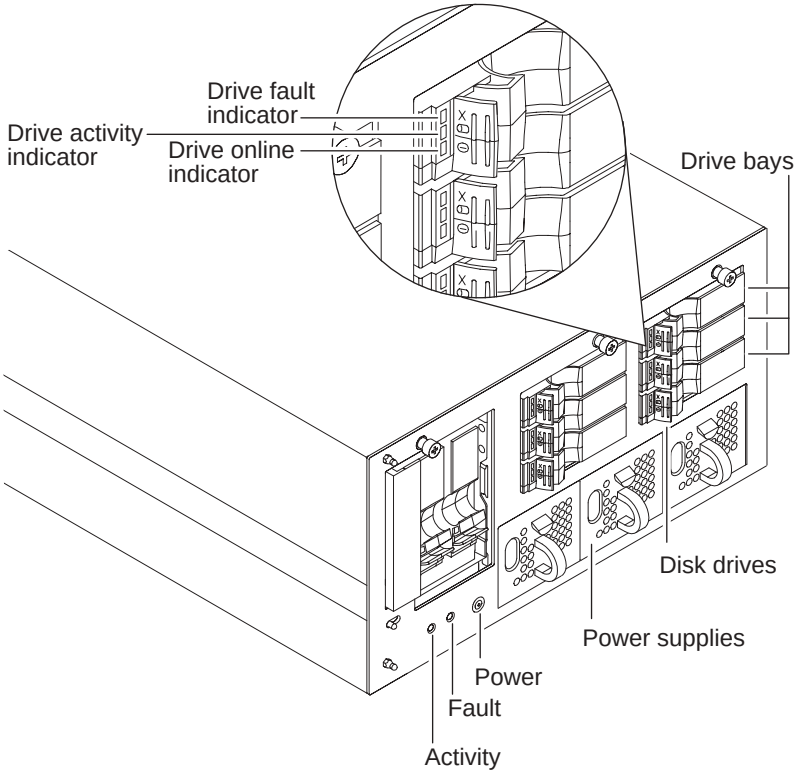

Indicator type	Status indicator	Description
Drive failure indicator	Blinking amber	The drive failed. The LED blinks amber once every second and the drive online indicator is off.
	Off	Drive is operating normally.

Indicator type	Status indicator	Description
Drive activity indicator	Blinking green	LED blinks with disk drive activity.
	Off	No disk activity
Drive online indicator	Green	Round icon is lit indicating that the drive has power and is online.
	Off	Drive is offline or has no power

LEDs visible on the power supplies

The following figure and table shows and describes the power supply LEDs that are visible after you remove the bezel.

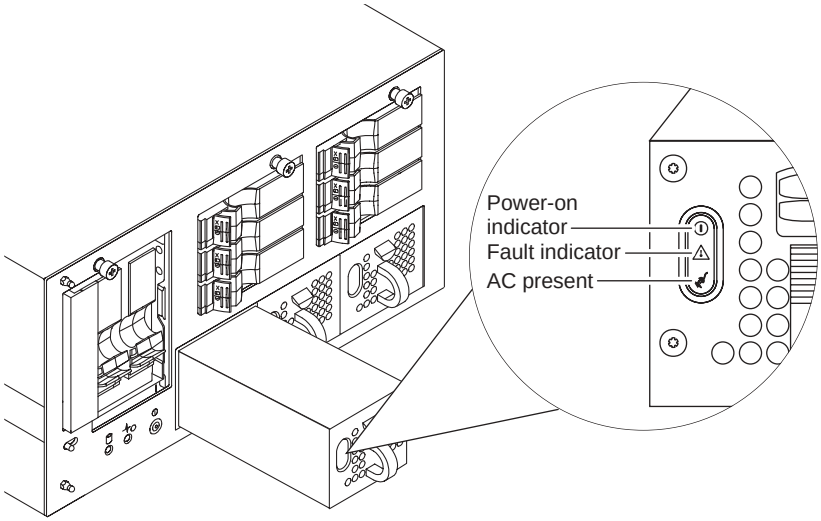

Indicator type	Status indicator	Description
Power-on indicator	Green	The power supply is operational.
	Off	The power supply is off.

Indicator type	Status indicator	Description
Fault indicator	Red	There is a power supply problem.
	Off	The power supply is functioning properly.
AC present indicator	Green	The power supply has power.
	Off	The power supply is not receiving power.

System Maintenance and Servicing 6

About this chapter

This chapter lists which field replaceable units (FRUs) are available for the filer, and describes the tasks you must complete to service the filer with these FRUs.

Topics in this chapter

This chapter describes how to install or replace FRUs in the filer in the following sections:

- "Field-replaceable unit overview" on page 52
- "Replacing disk drives" on page 55
- "Replacing the system fans" on page 57
- "Replacing power supplies" on page 59
- "Replacing DIMMs" on page 61
- "Installing or replacing expansion adapters" on page 64
- "Replacing the filer chassis" on page 69

Field-replaceable unit overview

About FRUs

A field-replaceable unit (FRU) is a component you can replace when one fails in your filer. FRUs must be purchased through Network Appliance or from an authorized reseller.

What you can replace with a FRUs

The following list specifies the field-replaceable components in the filer:

- Filer base or chassis
- Disk drives
  - 36-GB disk drive with the drive carrier
  - 72-GB disk drive with the drive carrier
- Bezel
- Fan assembly
- Power supply assembly
- DIMMs on the motherboard
- Expansion adapters
  - NVRAM 4 (nonvolatile random access memory) adapter
  - Ultra-2 SCSI tape backup adapter
  - GbE Ethernet network adapter
  - 10Base-T/100Base-TX/1000Base-T GbE Ethernet network adapter
  - Quad port 10Base-T/100Base-TX Ethernet adapter

What to do if the failed item isn't on the FRU list

If you need to replace a component that is not in the FRU list, you must call NetApp Customer Support for instructions.

Opening the filer

Opening the filer

To open the filer for accessing the internal FRUs, complete following steps.

Step	Action	
1	Ground yourself using an antistatic wrist strap, then shut down the filer using the `halt` command, if it is running.	
2	Unplug the filer and disconnect it from all power sources. **WARNING** **You must unplug both power cords to remove all power from the filer. Turning off the filer with the power switch does not cut off current to the filer.**	
3	**If the filer is...**	**Then...**
	Rack-mounted	1. Slide the filer out of the rack and remove the bezel. 2. Loosen the thumbscrews from the top of the filer front. 3. Slide and lift the cover off the filer.
	Tower system	1. Loosen the thumbscrews from the front of the filer. 2. Slide and lift the cover off the filer.

Closing the filer

Closing the filer

To close the filer, complete following steps.

Step	Action	
1	**If the filer is...**	**Then...**
	Rack-mounted	1. Fit the cover over the sides of the chassis and slide the cover forward. 2. Tighten the three thumbscrews on the front of the filer, then replace the bezel. 3. Flip the green toggle locks on the internal slide assembly, then slide the filer back into the rack. 4. Tighten the thumbscrews on the front of the filer to secure the filer to the rack.
	Tower system	1. Fit the cover over the sides of the chassis, and slide the cover forward. 2. Tighten the three thumbscrews on the front of the filer, then replace the bezel.
2	Reconnect the filer to the power source and reboot the filer, as described in Chapter 4, “Powering On the System,” on page 27.	

Replacing disk drives

About replacing disk drives

Replacing a disk drive consists of the following procedures:

- "Removing disk drives" on page 55
- "Installing a disk drive" on page 56

Removing disk drives

To remove or replace a disk drive from the filer, complete the following procedures, using the figure for reference.

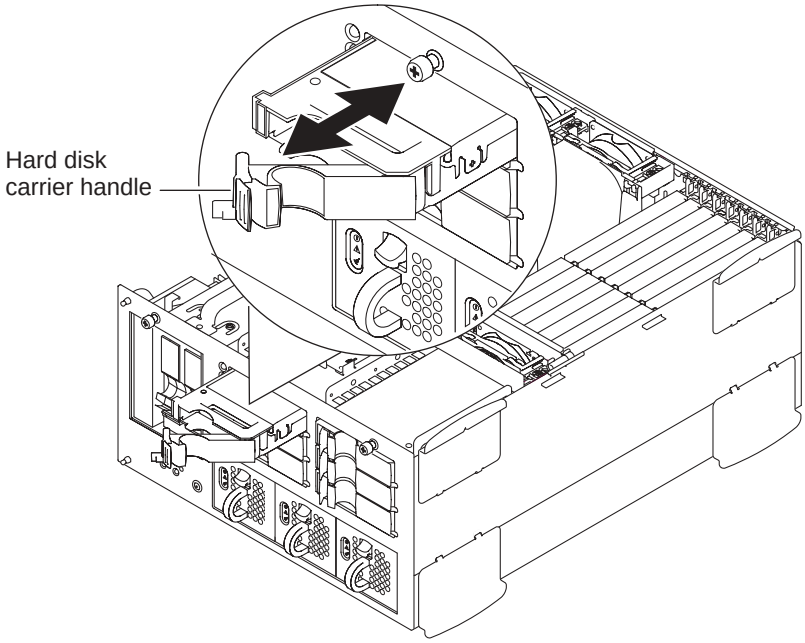

Step	Action
1	Ground yourself using an antistatic strap, then remove the bezel.
2	Press the edge of the disk drive carrier handle, and swing it away from the filer.

Step	Action
3	Slide the drive completely out of the bay.
4	Go to “Installing a disk drive” on page 56.

Installing a disk drive

To replace a disk drive, complete the following steps.

Step	Action
1	Align the replacement drive with the edges of the empty drive bay, and slide the drive all the way into the bay.
2	Close the drive carrier handle and push until it seats into place. Make sure the drive is securely in place by giving it a gentle tug. If the drive comes out, reseat it and lock it into place, then replace the bezel.

Replacing the system fans

About system fan replacement

There are two fan assemblies containing two individual fans. One assembly is near the SCSI backplane in a housing that holds the PCI adapters and swings up on a hinge, and the other fan assembly is attached to the back-panel of the filer. This latter fan housing is used to help secure the PCI adapters in place.

The filer can continue to run with one failed fan, but shuts down if two or more fans fail. You should only replace fans during normal maintenance. The filer must be shut down and unplugged from power sources before you open the filer.

Replacing a system fan consists of the following procedures:

- "Removing a system fan" on page 57
- "Installing a system fan" on page 58

Removing a system fan

To remove a fan from the fan assembly, complete the following procedures, using the figure for reference.

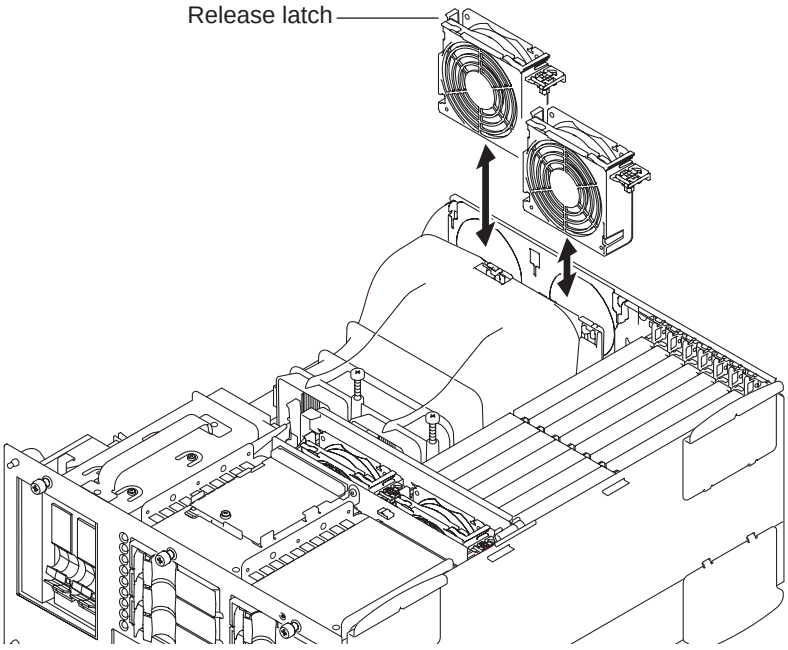

Step	Action
1	Ground yourself to the filer, then remove the bezel and open the filer as described in “Opening the filer” on page 53.
2	Locate the faulty fan through the error messages displayed on the console. Each fan has an ID number printed directly across from it.
3	Press the release button on the side of the fan, then lift the fan out of the housing.
4	Go to “Installing a system fan” on page 58.

Installing a system fan

To install a replacement system fan, complete the following steps.

Step	Action
1	Lower the new fan into the fan assembly until it clicks into place.
2	Close the filer, as described in “Closing the filer” on page 54.

Replacing power supplies

About the filer power supplies

The filer has three power supplies located behind the bezel. The power supplies are hot swappable. The filer continues to run with two functioning power supplies, but shuts down if two or more fail.

Replacing a power supply consists of the following procedures:

- "Removing a power supply" on page 59
- "Installing a power supply" on page 60

Removing a power supply

To remove a power supply from the chassis, complete the following steps, using the figure for reference.

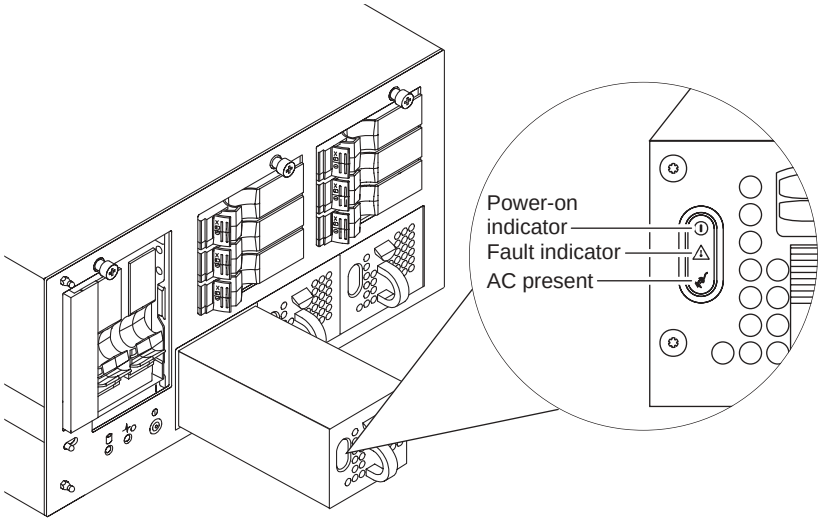

Step	Action
1	Ground yourself using an antistatic wrist strap, then remove the filer bezel.

Step	Action
2	Hold the handle on the front of the power supply and press down on the release lever and pull the power supply away from the chassis. **Note** Remove and replace only one power supply at a time. The filer must have a minimum of two working power supplies in the chassis at all times.
3	Go to “Installing a power supply” on page 60.

Installing a power supply

To install a replacement power supply, complete the following steps.

Step	Action
1	Align the new power supply with the carrier on the chassis and slide it straight into the chassis until it is seated in place, then replace the bezel.
2	Check the power supply LEDs. They should be green when the power supply is properly seated.

Replacing DIMMs

About replacing DIMMs

Replacing DIMMs consists of the following procedures:

- "Removing a DIMM" on page 61
- "Installing a DIMM" on page 63

Removing a DIMM

To remove a DIMM from the system motherboard, complete the following steps, using the figure for reference.

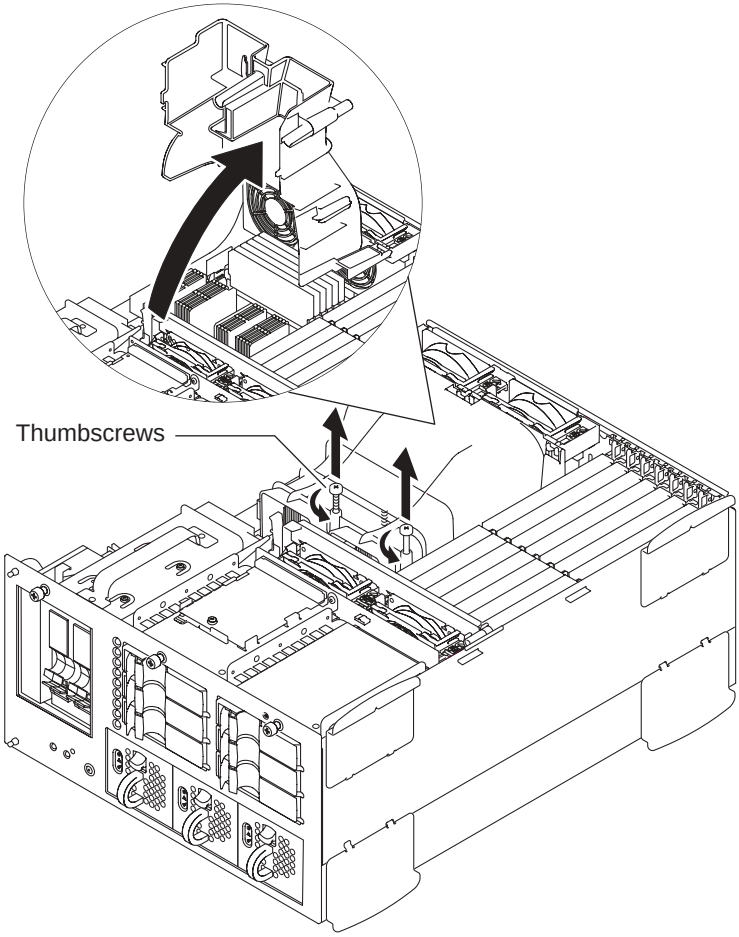

Step	Action
1	Open the filer, as described in "Opening the filer" on page 53. Make sure both power cords are unplugged from the filer.
2	Move the cable out of the slotted tab, loosen the thumbscrews on the cooling shroud, then swing the shroud up and out of the way.
3	Locate the DIMM you want to remove, then press down and outward on the ejectors at the end of the DIMM socket, until the DIMM pops free of the socket, then left free, as shown in the following figure. 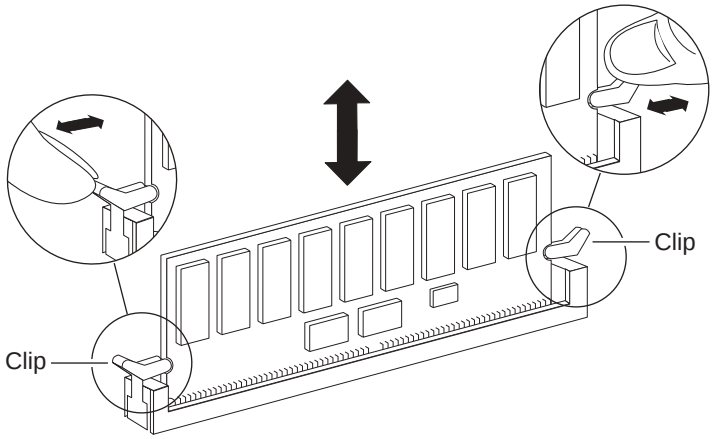
4	Go to "Installing a DIMM" on page 63 for installation instructions.

Installing a DIMM

To install a replacement DIMM, complete the following steps.

Step	Action
1	Align the new DIMM with the socket. Make sure that the notches at the end of the DIMM are aligned with the DIMM ejectors. **Note** You can only insert the DIMM one way into the DIMM socket. If the DIMM does not fit properly, turn the DIMM 180 degrees and reinsert it into the socket.
2	Press down on the DIMM while pulling up on the ejectors to lock the memory module into the socket.
3	Reinstall the cooling shroud.
4	Close the filer as described in "Closing the filer" on page 54.

Installing or replacing expansion adapters

About expansion adapters

The following list specifies the expansion adapters that the filer can use:

- NVRAM 4 adapter
- Ultra-160 SCSI tape backup adapter
- NICs
  - GbE network adapter
  - 10Base-T/100Base-TX/1000Base-T GbE network adapter
  - Quad port 10Base-T/100Base-TX Ethernet adapter

The System Configuration Guide at http://now.netapp.com lists current configurations for your filer. The Web site lists the following information:

- Expansion slots that are available on your filer
- Supported adapters
- Expansion slot assignments

Caution

Do not use an expansion adapter that is not listed in the System Configuration Guide, or install it in an expansion slot not listed in this guide. Installing an expansion adapter incorrectly or using an unsupported adapter can adversely affect your filer performance. Purchase your adapters only through Network Appliance or an authorized reseller.

Replacing a expansion adapters consists of the following procedures:

- "Removing an expansion adapter" on page 65
- "Installing an expansion adapter" on page 66

About the NVRAM 4 adapter

The NVRAM adapter has an attached, sealed, lithium-ion battery that is recharged whenever the system is turned on and operating normally. The NVRAM also contains the CompactFlash card, which is used during system boot. This card contains the most recently downloaded versions of Data ONTAP, system diagnostics, and the files the filer requires to boot.

When replacing the NVRAM 4 adapter, you need to reinitialize the CompactFlash card. See "Updating NVRAM 4 software and firmware" on page 67 and the *Software Setup Guide* for instructions about how to perform this task.

When to replace the NVRAM 4 adapter

Replace the NVRAM adapter only if the following situations occur:

- The battery continues to read low after 24 hours of normal system operation.
- The system does not boot, or you receive warning messages during boot that the CompactFlash card is invalid or damaged.
- Diagnostic tests indicate a problem with the NVRAM adapter, which requires replacing it.

Removing an expansion adapter

To remove an expansion adapter, complete the following steps, using the figure for reference.

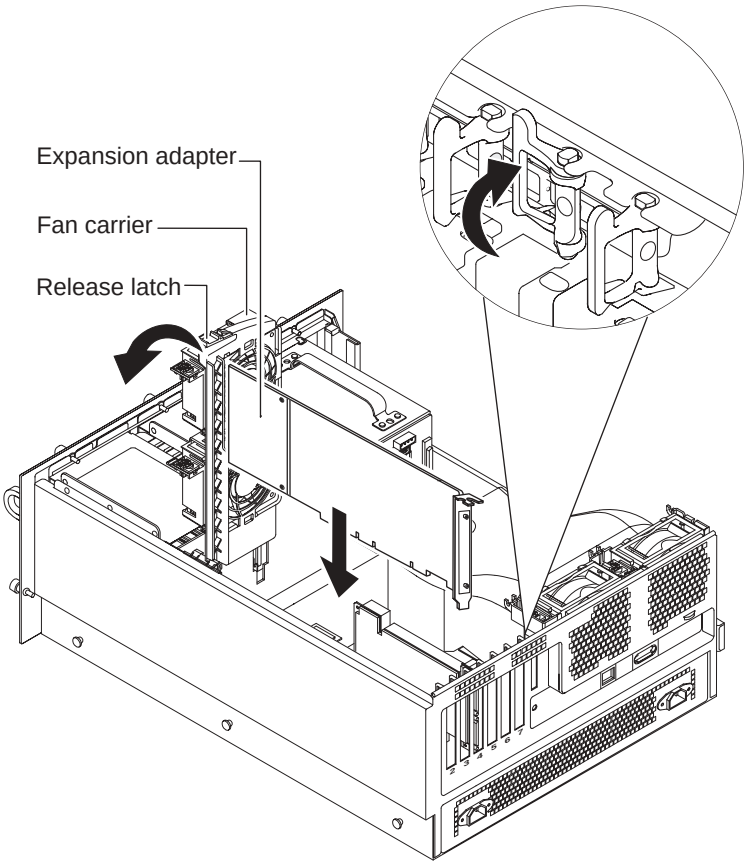

Step	Action
1	Open your filer, as described in "Opening the filer" on page 53. Make sure both power cords are unplugged from the filer.
2	Release the fan carrier and swing it up out of the way.
3	Locate the adapter you want to remove and unplug any cables that are attached to it. You should mark the cables so that you know what they are and where they came from.
4	Flip the retaining latch at the back of the adapter to the open position, then grasp the front and back of the adapter and gently rock it back and forth until it is free of the PCI slot.

Installing an expansion adapter

To install a replacement expansion adapter, complete the following steps.

Step	Action	
1	Insert the replacement adapter into the PCI slot, and firmly seat it back into the slot.	
2	Flip the retaining latch into the closed position, then swing the mid-point fan assembly back into position and snap it into place.	
3	Close the filer cover, as described in "Closing the filer" on page 54.	
4	**If you replaced...**	**Then...**
	The NVRAM 4 adapter	Go to "Updating NVRAM 4 software and firmware" on page 67.
	Any other adapter	Complete the booting process and test the new adapter by running the online diagnostics for the new adapter.

Updating NVRAM 4 software and firmware

After replacing the NVRAM 4 adapter, you must update the software and firmware on the CompactFlash that is part of the NVRAM 4 adapter.

To update the NVRAM 4 software and firmware, complete the following steps.

Step	Action	
1	Replace the NVRAM 4 adapter, as described in "Installing or replacing expansion adapters" on page 64.	

2	Power on the system.
	Result: The filer console displays the POST messages. After POST completes, the filer console displays the following menu:
	`Netboot`
	`Disk boot menu`	

3	Select `Disk Boot menu> Boot from the first disk`.	
4	**If...**	**Then...**

	The filer can boot from the selected disk	The filer displays the following menu:
		`1) Normal Boot`
		`2) Boot without /etc/rc`
		`3) Change Password`
		`4) Initialize all disks`
		`5) Maintenance mode boot`
		`Selection (1-5)?`

	The filer cannot boot from the selected disk	The filer displays an error message stating that it cannot boot from the selected disk.
		Press any key to return to the `Disk boot` menu and select one of the following boot options:
		`Boot from the second disk, if possible.`
		`Boot from the third disk, if possible.`

5	Select `1) Normal Boot` at the filer console to boot the filer from the selected disk.	

Step	Action
6	Enter the **`download`** command from the console to download the disk image to the CompactFlash card. **Result:** The filer copies the contents of the filer's /etc/boot directory to the CompactFlash card.
7	Reboot the system by entering **`reboot`** at the prompt.
8	Repeat Steps 6 and 7 to complete the software and firmware update procedure.

Replacing the filer chassis

Replacing the chassis

To replace the chassis, complete the following steps.

Step	Action
1	Unplug all cables from the back of the filer, then remove the it from the equipment rack.
2	Install the replacement chassis in its place. See "Installing the filer in a standard equipment rack" on page 10 for installation instructions.
3	Open the filer, as described in "Opening the filer" on page 53. Make sure both power cords are unplugged from the filer.
4	Remove the power supplies from the old filer and install them in the new filer, as described in "Replacing power supplies" on page 59.
5	Remove the disk drives and install them in the new filer, as described in "Replacing disk drives" on page 55.
6	Remove each expansion adapter from the old filer, and install them in the new filer, as described in "Installing or replacing expansion adapters" on page 64. Make sure each adapter is installed in the correct slots in the new filer.
7	Reconnect the NICs, terminal cable, and power cables, then turn on the front power switch.
8	Close the filer, as described in "Closing the filer" on page 54.

Recommended Power Line Size A

About this appendix This appendix discusses how to determine the power line requirements.

Recommended AC power line sizes

About AC power feeds

Longer AC power feeds must be properly designed to preserve voltage levels to the equipment. The wiring from the breaker panel to the power strip, which supplies power to the filer and disk shelf, can often exceed 50 feet.

Note

Total AC wire length = breaker to wall or ceiling outlet + extension cable or ceiling drop.

Recommended conductor size

The following table lists the recommended conductor size for a 2% voltage drop for a particular distance in feet (taken from the *Radio Engineer's Handbook*).

110V, single-phase	**20A circuit**	**30A circuit**	**40A circuit**	**50A circuit**
25 ft	12 AWG	10 AWG	8 AWG	8 AWG
50 ft	8 AWG	6 AWG	6 AWG	4 AWG
75 ft	6 AWG	4 AWG	4 AWG	4 AWG

220V, single-phase	**20A circuit**	**30A circuit**	**40A circuit**	**50A circuit**
25 ft	14 AWG	12 AWG	12 AWG	10 AWG
50 ft	12 AWG	10 AWG	8 AWG	8 AWG
75 ft	10 AWG	8 AWG	6 AWG	6 AWG

Wire gauge approximates

The following table lists the approximate equivalent of American Wire Gauge (AWG) to Harmonized Cordage.

AWG	**8**	**10**	**12**
Harmonized, mm-mm	4.0	2.5	1.5

Communications Regulations B

About this appendix This appendix lists the regulatory notices you need to be aware of when installing and operating your Network Appliance equipment.

Regulatory notices

FCC notices (U.S. only)

Network Appliance devices are designed for a CFR 47 (Code Federal Regulations) Part 15 Class A environment.

The FCC and Network Appliance guarantee the user's rights to operate this equipment only if the user complies with the following rules and regulations:

- Install and operate this equipment in accordance with the specifications and instructions in this guide.
- Modify this equipment only in the ways specified by Network Appliance.
- Use shielded cables with metallic RFI/EMI connector hoods to maintain compliance with applicable emissions standards.
- If the system has nine or more fibre channel disk shelves, install the system in two or three NetApp System Cabinets to maintain performance within Part 15 of CFR 47 regulations.

Compliance with Part 15 of CFR 47

This equipment has been tested and found compliant with Part 15 of the CFR 47 rules for Class A digital devices. These rules are designed to provide reasonable protection from interference to electronics equipment operated in a commercial environment.

Operation of this device is subject to the following two conditions:

- This device cannot cause harmful interference.
- This device must accept any interference received, including interference that may cause undesired operation.

Compliance with ICES-003

This Class A digital apparatus complies with Canadian ICES-003.

Cet appareil numérique de la classe A conforme à la norme NMB-003 du Canada.

Compliance with EN regulations

Marking by the symbol CE indicates compliance of this Network Appliance device to the EMC Directive and the Low Voltage Directive of the European Union. Such marking is indicative that this Network Appliance device meets the technical standards listed in “Declaration of Conformity,” later in this appendix.

Caution

This is a Class A product. In a domestic environment this product may cause radio interference, in which case the user may be required to take adequate measures.

Bureau of Standards, Metrology, and Inspections notice (BSMI, Taiwan only)

警告使用者:

這是甲類的資訊產品, 在居住的環境中使用時, 可能會造成射頻干擾, 在這種情況下, 使用者會被要求采取某些適當的對策.

Translation of the BSMI notice:

Warning: This is a Class A product. In a domestic environment this product may cause radio interference, in which case the user may be required to take adequate measures.

Voluntary Control Council for Interference by Information Technology Equipment (VCCI, Japan)

この装置は、情報処理装置等電波障害自主規制協議会（ＶＣＣＩ）の基準に基づくクラスＡ情報技術装置です。この装置を家庭環境で使用すると電波妨害を引き起こすことがあります。この場合には使用者が適切な対策を講ずるよう要求されることがあります。

Translation of the VCCI-A notice:

This is a Class A product based on the standard of the Voluntary Control Council for Interference by Information Technology Equipment (VCCI). If this equipment is used in a domestic environment, radio disturbance may arise. If such trouble occurs, the user may be required to take corrective actions.

Declaration of Conformity

Network Appliance, Inc.,
495 East Java Drive
Sunnyvale, California, 94089, U.S.A.,

declare under our sole responsibility that the products

Type of equipment	Description	Model number	Year of manufacture
Network File Server	NetApp F87 Filer	F87	2001

to which this declaration relates conform to the following standards:

EN 60950:1992, with A1-A4, A11, Information Technology Equipment (Safety)

EN 55022:1998, Emissions Requirements for Information Technology Equipment

EN 50024:1998, Immunity Requirements for Information Technology Equipment

EN 60825-1, Safety of Laser/LED Equipment

IEC 1000-3-2:1995 Limits for Harmonic Current Emissions

IEC 1000-3-3:1994 Limitation of Voltage Fluctuations and Flicker in Low-Voltage Supply Systems

following the provisions of the directives listed below:

73/23/EEC, Low Voltage Directive (Product Safety)

89/336/EEC, Electromagnetic Compatibility Directive

Part number: 210-02097

Index

Numerics

10Base-T/100Base-TX Ethernet network
- cabling requirements 22
- connecting 23

10Base-T/100Base-TX/1000Base-T Ethernet network
- cabling requirements 22
- connecting 23

19-inch equipment rack
- installing in a 10
- required installation hardware 2

A

adapters
- NVRAM 4 64
- removing and replacing 65
- replacing 64
- supported by the filer 64

ASCII console
- cable wiring 25
- cabling to your filer 26

audience v

B

boot, messages example 30

C

cabling requirements, network 22
chassis, replacing the 69
console
- cabling 26
- correcting garbled display 26
- wiring 25

conventions
- command v
- formatting vi

D

dimensions, filer 5
DIMMs
- installing 61
- removing 61

disk drives
- LEDs 48
- removing 55
- replacing 55

documentation, required 4
double two-post equipment rack
- installing in a 15
- required installation hardware 2

E

error messages
- beep codes 41
- console displayed 34

F

fans
- removing 57
- replacing 57

fiber optic cable with SC connector, on GbE networks 22
field replaceable units (FRUs)
- DIMMs 61
- expansion adapter listing 64
- listing of 52
- re-installing expansion adapters 66
- removing expansion adapters 65
- replacing chassis 69
- replacing DIMMs 61
- replacing disk drives 55
- replacing fans 57
- replacing NVRAM 4 adapter 64
- replacing power supplies 59

filer
- closing the 54
- configuration equipment for 3

connecting to a power source 28
dimensions of 5
environmental requirements for 5
installing the cable management arm 12
opening the 53
space requirements for 6
firmware and software, updating the NVRAM 4 adapter 67
four-post equipment rack
installing in a 10
required installation hardware 2

G

GbE network
cabling requirements 22
connecting 24

I

installation
cable management arm 12
double two-post 15
equipment rack components 2
preparing the tape backup device for 20
rack conversion components for 2
required tools for 3
the tape backup device 20
two-post instructions 13
interpratation of LEDs
external 44
internal 44
on the bezel 45
on the disk drives 48
on the filer back 46
on the power supplies 49

L

LEDs
interpreting the bezel 45
interpreting the disk drive 48
interpreting the external 44
interpreting the front panel 28
interpreting the internal 44
interpreting the on-board Ethernet 46
interpreting the power supplies 49
interpreting the power supply status 49

M

maintenance
removing DIMMs 61
removing power supplies 59
replacing DIMMs 61
replacing disk drives 55
replacing fans 57
messages
beep code errors 41
console error 34

N

network connections
10Base-T/100Base-TX 23
GbE 24
NVRAM 4 adapter
about the 64
updating software and firmware 67
when to replace 65

P

POST example 29
power supplies
removing 59
status LEDs 49
power, recommended conductor size 72

R

rack installation
conversion components 2
converting a double two-post rack 15
converting a two-post rack 13
requirements
documentation 4
filer configuration equipment 3
filer dimensions 5
filer environment 5
for cabling Ethernet networks 22
installation tools 3

S

safety information vii
shipment contents 2
software and firmware, updating the NVRAM 4
adapter 67
special messages vi

T

tape backup
    connecting 20
    preparing to install 20
terminology v
tools and equipment
    installation tools 3
    rack installation hardware 2
two-post equipment rack
    installing in a 13
    required installation hardware 2