NetApp® NearStore®
R200 Hardware and Service Guide

Network Appliance, Inc.
495 East Java Drive
Sunnyvale, CA 94089 USA
Telephone: +1 (408) 822-6000
Fax: +1 (408) 822-4501
Support telephone: +1 (888) 4-NETAPP
Documentation comments: doccomments@netapp.com
Information Web: http://www.netapp.com

Part number 210-00387+B0
February 2004

Copyright and trademark information

Copyright information

Copyright © 1994–2004 Network Appliance, Inc. All rights reserved. Printed in the U.S.A.

No part of this book covered by copyright may be reproduced in any form or by any means—graphic, electronic, or mechanical, including photocopying, recording, taping, or storage in an electronic retrieval system—without prior written permission of the copyright owner.

Network Appliance reserves the right to change any products described herein at any time, and without notice. Network Appliance assumes no responsibility or liability arising from the use of products described herein, except as expressly agreed to in writing by Network Appliance. The use or purchase of this product does not convey a license under any patent rights, trademark rights, or any other intellectual property rights of Network Appliance.

The product described in this manual may be protected by one or more U.S. patents, foreign patents, or pending applications.

RESTRICTED RIGHTS LEGEND: Use, duplication, or disclosure by the government is subject to restrictions as set forth in subparagraph (c)(1)(ii) of the Rights in Technical Data and Computer Software clause at DFARS 252.277-7103 (October 1988) and FAR 52-227-19 (June 1987).

Trademark information

NetApp, the Network Appliance design, NetApp–the Network Appliance Company, FAServer, NearStore, NetCache, and WAFL are registered trademarks of Network Appliance, Inc. in the United States and other countries. Network Appliance is a registered trademark of Network Appliance, Inc. in Monaco and a trademark of Network Appliance, Inc. in the United States and Canada. SnapCopy is a registered trademark of Network Appliance, Inc. in the European Union and a trademark of Network Appliance, Inc. in the United States. DataFabric, FilerView, SecureShare, SnapManager, SnapMirror, and SnapRestore are registered trademarks of Network Appliance, Inc. in the United States. Data ONTAP and Snapshot are trademarks of Network Appliance, Inc. in the United States and other countries. ApplianceWatch, BareMetal, Center-to-Edge, ContentDirector, gFiler, MultiStore, SecureAdmin, Serving Data by Design, Smart SAN, SnapCache, SnapDrive, SnapMover, SnapVault, vFiler, and Web Filer are trademarks of Network Appliance, Inc. in the United States.

Apple is a registered trademark and QuickTime is a trademark of Apple Computer, Inc. in the United States and/or other countries.

Microsoft is a registered trademark and Windows Media is a trademark of Microsoft Corporation in the United States and/or other countries.

RealAudio, RealNetworks, RealPlayer, RealSystem, RealText, and RealVideo are registered trademarks and RealMedia, RealProxy, and SureStream are trademarks of RealNetworks, Inc. in the United States and/or other countries.

All other brands or products are trademarks or registered trademarks of their respective holders and should be treated as such.

Network Appliance is a licensee of the CompactFlash and CF Logo trademarks.

Network Appliance NetCache is certified RealSystem compatible.

Table of Contents

Preface vii

Safety Information (Sicherheitshinweise) ix

Chapter 1 **Preparing and Installing** 1

Required tools, equipment, and documentation 2

Installation rules and restrictions 4

Installing the hardware 5
- Installing disk shelves 6
- Installing the R200 storage engine 9

Chapter 2 **Connecting Your System** 11

Connecting an R200 disk shelf 12

Connecting third-party devices 15
- Connecting a third-party SCSI tape backup device 16
- Connecting a third-party Fibre Channel switch 18

Connecting to an Ethernet network 20
- Connecting to a copper GbE network 22
- Connecting to a fiber optic GbE network 24

Connecting to a Fibre Channel network 26

Connecting to an ASCII terminal console 27

Connecting the system to a power source and powering on 29
- Connecting the disk shelves to AC power 30
- Connecting the storage engine to AC power 32

Chapter 3 **Startup Responses** 35

Storage engine LED responses at startup 36
- Front panel LEDs 37
- FC-AL/FC HBA LEDs 39
- GbE NIC LEDs 41
- Power supply LEDs 44

Disk shelf LED responses at startup 45

Startup messages 49

Chapter 4 **Replacing Disk Shelf Components** 51

Replacing a disk shelf in a rack. 52

Replacing a disk in a disk shelf. 53
Removing a disk from a disk shelf 54
Installing a disk in a disk shelf 55

Replacing a power supply in a disk shelf. 56
Removing a power supply from a disk shelf 57
Installing a power supply in a disk shelf 58

Replacing the AT-FC module 59
Removing an AT-FC 60
Installing an AT-FC 61

Chapter 5 **Replacing Storage Engine Components** 63

Field-replaceable unit overview 64

Opening the PCB carrier 65

Removing the PCB carrier 67

Replacing the motherboard 69

Replacing the motherboard lithium battery. 72

Replacing the memory card assembly 74

Replacing SDRAM DIMMs on the memory card assembly 77

Installing or replacing expansion adapters 81

Closing the PCB carrier. 85

Replacing fan subassemblies 86

Replacing the power supplies. 90

Replacing the control panel subassembly 94

Chapter 6 **Error Messages and Troubleshooting** 97

Startup error messages 98
POST error messages. 99
Boot error messages 104

Operational error messages 108
Troubleshooting system boot problems 114

Appendix A **Recommended Power Line Sizes** 115
Recommended AC power line sizes 116

Appendix B **Communications Regulations**. 117
Regulatory notices 118
Declaration of Conformity 120

Index 121

Preface

About this guide

This guide describes how to install a NetApp® NearStore® R200 storage system, connect it to the network, and start it up.

Audience

This guide is for system administrators who are familiar with operating systems that run on the storage system's clients, such as UNIX®, Windows 95™, Windows NT®, Windows® 2000, and Windows XP. The procedures in this guide describe replacement, upgrade, and maintenance tasks for personnel with the following skills and experience:

- Working familiarity with small computer system hardware and operation
- Basic understanding of common networking concepts and practices
- Working familiarity with accepted tools and procedures for installing and operating sensitive electronic equipment

Terminology

This guide uses the following terms:

- *R200 or R200 system* refers, at a minimum, to an R200 storage engine and two or more R200 disk shelves, depending on your configuration.
- *Disk shelf* refers to an R200 disk shelf.
- *Storage engine*, or *R200 storage engine*, refers to the "controller unit" that the disk shelves are attached to.
- *AT-FC* refers to the AT-Fibre Channel module on the back of the disk shelf.

Note

In the Data ONTAP™ software documentation that came with your R200, the term *filer* is used in place of the term *storage engine*. For this instance, the terms *filer* and *storage engine* refer to the same physical component of the storage system; that is, the device that oversees the flow of data to and from the disk shelves.

Formatting conventions

The following table lists the kinds of formatting this guide uses to identify special information.

Formatting convention	Type of information
Italic type	◆ Words or characters that require special attention. ◆ File names and path names. ◆ Placeholders for information you must supply. For example, if the guide says to enter the **`arp -d`** *hostname* command, you enter the characters “arp -d” followed by the actual name of the host. ◆ Man page names. ◆ Book titles in cross-references.
`Monospaced` font	◆ Command and daemon names. ◆ Information displayed on the system console or other computer monitors. ◆ The contents of files.
`Bold monospace` font	Words or characters you type. What you type is always shown in lowercase letters, unless you must type it in uppercase letters for it to work properly.

Special messages

This guide contains special messages that are described as follows:

Note

A note contains important information that helps you install or operate the system efficiently.

Caution

A caution contains instructions that you must follow to avoid damage to the equipment, a system crash, or loss of data.

WARNING

A warning contains instructions that you must follow to avoid personal injury.

Safety Information (Sicherheitshinweise)

Safety rules

All products are Class 1 laser devices. You must follow these safety rules when working with this equipment:

WARNING

Failure to follow these directions could result in bodily harm or loss of life.

- **Switzerland only—for FAS900, GF900, R200, and C6200 systems:** This equipment relies on fuses/circuit breakers in the building installation for overcurrent protection. Each power supply must receive power from a separately dedicated outlet with a 10A fuse/circuit breaker.
- When installing disk shelves and a storage appliance into a movable cabinet or rack, install from the bottom up for best stability.
- DC-based systems must be installed in a restricted access location and the two input power terminals for the DC power supply must be connected to separate isolated branch circuits.
- To reduce the risk of personal injury or equipment damage, allow internal components time to cool before touching them and ensure that the equipment is properly supported or braced when installing options.
- This equipment is designed for connection to a grounded outlet. The grounding type plug is an important safety feature. To avoid the risk of electrical shock or damage to the equipment, do not disable this feature.
- This equipment has one or more replaceable batteries. There is danger of explosion if the battery is incorrectly replaced. Replace the battery only with the same or equivalent type recommended by the manufacturer. Dispose of used batteries according to the manufacturer's instructions.

Warning for units with multiple power cords

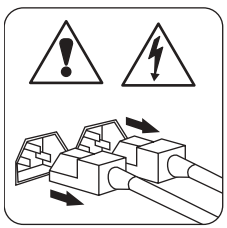

If your storage appliance or disk shelf has multiple power cords and you need to turn the unit off, heed the following warning:

WARNING

This unit has more than one power supply cord. To reduce the risk of electrical shock, disconnect all power supply cords before servicing.

Sicherheitsvorgaben

Alle Produkte sind Lasergeräte der Klasse 1. Die folgenden Sicherheitshinweise sind beim Betreiben des Geräts unbedingt zu beachten:

Vorsicht

Nichtbeachtung dieser Anweisungen kann zu schweren Körperschäden führen oder tödlich sein.

- **Nur für die Schweiz - Systeme FAS900, GF900, R200 und C6200:** Diese Geräte erfordern den Festeinbau von Sicherungen zum Überstromschutz. Jeder Netzanschluss muss mit Strom aus getrennten, speziell für diesen Zweck vorgesehenen Steckdosen versorgt werden, die jeweils mit einer 10A-Sicherung geschützt sind.
- Bei der Montage der Diskettenregale und Archivierungsgeräte, des NetCache™ -Geräts oder des NearStore® -Systems in bewegliche Schränke oder Regale sind die Geräte von unten nach oben einzubauen, um optimale Stabilität zu gewährleisten.
- Gleichstrom-Systeme müssen an Betriebsstaette mit beschraenktem Zutritt installiert sein und die beiden Eingangsstromklemmen für das Gleichstrom-Netzteil müssen an separate und isolierte Abzweigleitungen angeschlossen sein.
- Zum Schutz vor Körperverletzung oder Sachschäden am Gerät lassen Sie die inneren Bauteile stets vor dem Berühren abkühlen. Sorgen Sie dafür, dass das Gerät richtig abgestützt ist oder fest aufrecht steht, bevor Sie neues Zubehör einbauen.
- Dieses Gerät ist für die Einspeisung aus einer geerdeten Netzverbindung ausgelegt. Der Netzstecker mit Erdungsvorrichtung ist ein wichtiger Sicherheitsschutz. Zum Schutz vor elektrischem Schlag oder Sachschäden am Gerät die Erdung nicht abschalten.
- Das Gerät ist mit einer oder mehreren auswechselbaren Batterien ausgestattet. Bei unsachgemäßem Auswechseln der Batterie besteht Explosionsgefahr. Batterien nur mit dem vom Hersteller empfohlenen Typ oder entsprechenden Typen ersetzen. Gebrauchte Batterien sind gemäß den Anweisungen des Herstellers zu entsorgen.

Warnhinweis für Geräte mit mehrfachen Netzanschlussleitungen

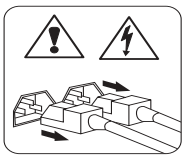

Sollte Ihr Archiviergerät, NetCache-Gerät, NearStore-System oder Diskettenregal mehrfache Netzanschlussleitungen aufweisen und Sie wollen das Gerät abschalten, bitte folgenden Warnhinweis beachten.

ACHTUNG

Gerät besitzt zwei Netzanschlussleitungen. Vor Wartung alle Anschlüsse vom Netz trennen.

Preparing and Installing

1

About this chapter

This chapter specifies the preparation requirements for a first-time installation of an R200. It also describes how to install the R200 in a mid-mount configuration. See the *R200 Easy Installation Instructions* for 2-post and 4-post rack flush-mount installation instructions.

Note

This guide does not provide instructions for configuring your new R200. See the *Software Setup Guide* for configuration information and instructions.

Topics in this chapter

This chapter discusses the following topics:

- "Required tools, equipment, and documentation" on page 2
- "Installation rules and restrictions" on page 4
- "Installing the hardware" on page 5

Required tools, equipment, and documentation

Equipment you should receive

In addition to this guide, your R200 contains the following components:

- One storage engine and bezel
- A minimum of 8 TB of ATA-to-Fibre Channel storage
- 42U storage equipment cabinet, or the rack mounting hardware and installation kit for telco-type equipment rack installation.
- A DB-9 to DB-9 straight-through serial cable and a DB-9 to RJ-45 adapter for an ASCII terminal connection
- LC/LC storage engine-to-disk shelf cables
- HSSDC2 disk shelf-to-disk shelf cables
- A disposable antistatic grounding leash
- User manuals
- Disk shelf and storage engine power cables
- Cabinet power cable sets with IEC or NEMA plugs (for systems sold with a storage cabinet)

Required tools and equipment

To install the R200 components in an equipment rack, you need the following tools and equipment:

- Phillips screwdrivers (#0, #1, and #2)
- #10-32 steel screws for fastening the storage engine to the rack
- Antistatic wrist strap and grounding leash

Caution

The R200 uses electronic components that are sensitive to static electricity. Static discharge from your clothing or other fixtures around you can damage these components. Always wear an antistatic wrist strap and attach the grounding leash so that you are appropriately grounded before touching any electronic components.

Required configuration equipment

To configure your system, you need the following equipment on site:

- ASCII terminal (also referred to as an ANSI terminal) or serial console
- Communications server
- Null modem cable (optional if the DB-9 to DB-9 serial cable for an ASCII terminal connection is not compatible with your terminal connector.)

Recommended documentation

The following table lists documentation that helps you manage the R200.

Document name	When to use	Where to find
Site Requirements Guide	Use this guide to assist you in preparing your site for your new R200.	Document package, and online at now.netapp.com
Data ONTAP Release Notes	Use this document to see what is new with your system, for a list of new procedures that didn't make the user documentation, and for a listing of the changes since the last release of the Data ONTAP software.	On the Media Kit CD-ROM and online at now.netapp.com
System Configuration Guide	Use this guide to determine which NICs and other hardware is supported by your system.	Online at now.netapp.com
Software Setup Guide	Use this guide to set up the system software on the storage engine.	Document package, and online at now.netapp.com
System Administration Storage Management Guide	Use this guide to configure, operate, and manage the storage engine.	Document package, and online at now.netapp.com
System Administration File Access Management Guide	Use this guide to configure and manage different file access protocols supported by Data ONTAP.	Document package, and online at now.netapp.com
System Administration Data Protection Guide	Use this guide to address administration, such as data protection and high availability issues.	Document package, and online at now.netapp.com

Installation rules and restrictions

General rules and restrictions

Observe the following rules and restrictions when installing an R200:

- You must wear an antistatic wrist strap when you handle electronic equipment.
- You must work with two other people when installing the storage engine.

WARNING

The storage engine is extremely heavy. Three people are required to install the storage engine when both power supplies are installed. Two people are required to install the disk shelves safely into a rack or NetApp® System Cabinet.

Rules for arranging the components in a system cabinet

Observe the following rules when arranging the components in a system cabinet for an R200:

- The R200 storage engine supports up to 12 disk shelves in a single system cabinet. If you have more than 12 disk shelves in your system, you need to use a second cabinet, connecting them together with the system cabinet interconnect kit.
- Component installation must be done so that the storage engine is in the middle of the configuration and an equal number of disk shelves are installed above and below the storage engine.
- System disk shelves are divided evenly into two loops.
- Only install the number of disk shelves supported by your storage engine. The System Configuration Guide at http://now.netapp.com lists the current storage limit for your model.

Freestanding equipment rack requirements

The freestanding equipment rack must meet the following requirements:

- A width of 19 inches (48.26 cm)
- Front installation rails compliant with EIA standard EIA-310-D

Installing the hardware

About installing the hardware

You can install your system in one of three ways, as identified in the following table.

Installation method	Where documented
Two-post or four-post, flush-mount configuration	*Easy Installation Instructions* and the *Telco Tray and Rail Kit Installation Instructions* flyer.
Two-post, mid-mount (center of gravity) configuration	"Installing disk shelves" on page 6 and "Installing the R200 storage engine" on page 9.
System cabinet	*42U System Cabinet Guide*

For detailed information

For details about installing an R200 system, see the following topics:

- "Installing disk shelves" on page 6
- "Installing the R200 storage engine" on page 9

Installing disk shelves

About disk shelf loops

In a single system cabinet, the storage shelves in an R200 system are divided into two loops. Half of the disk shelves belong to one loop and are mounted below the storage engine. The other half of the disk shelves belong to the second loop and are mounted above the storage engine.

Installing the disk shelves in a mid-mount configuration

To install the disk shelf in a mid-mount configuration in a two-post rack, complete the following steps, using the illustration for reference.

WARNING

You must install the disk shelf tray from the rack mount kit. The disk shelf and storage engine ears are not designed to hold the weight of the disk shelf or storage engine. The disk shelf and storage engine will collapse from the rack under its own weight without the disk shelf tray supporting it.

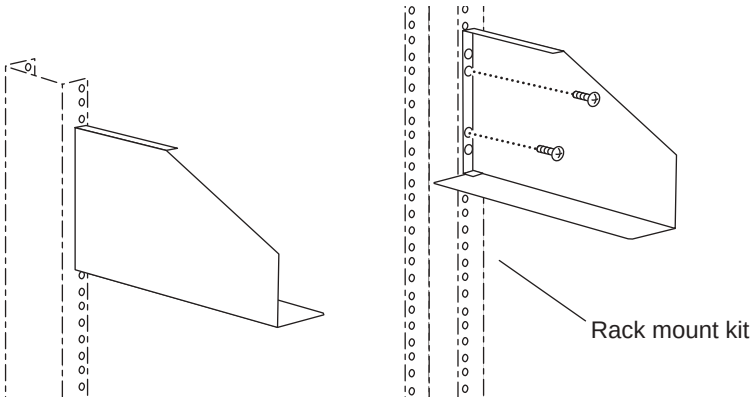

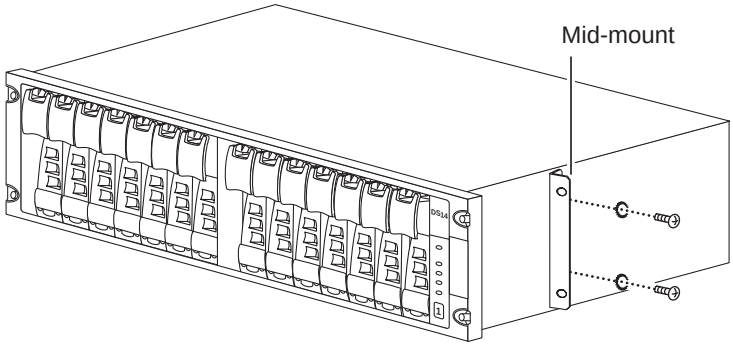

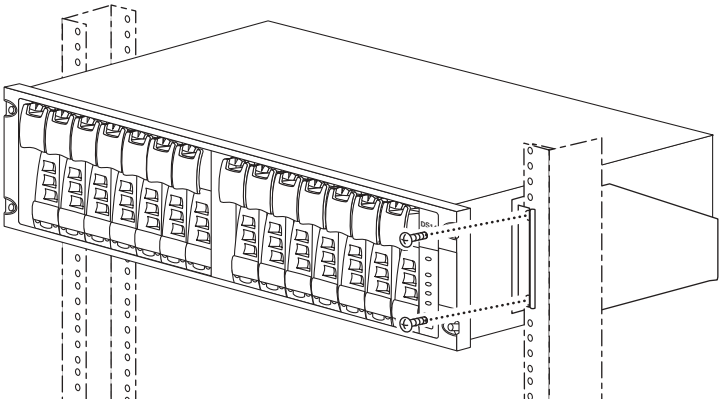

Step	Action
1	While grounded, install the first disk shelf tray for the bottom loop at the bottom of the rack, as described in the accompanying kit flyer.
2	Select two holes in the middle of each side of the disk shelf to which you want to attach the brackets and secure the brackets with the #10 Phillips head screws.
3	Repeat Step 2 for the bracket on the other side of the disk shelf, then slide the disk shelf onto the disk shelf tray.
4	Align the holes on the rack to the holes on the bracket and secure the disk shelf to the rack with the mounting screws.
5	Repeat Steps 1 through 4 for the remaining disk shelves in the bottom loop.

Step	Action
6	Install the storage engine, as described in “Installing the R200 storage engine” on page 9.
7	Repeat Steps 1 through 4 for all the disk shelves in the loop above the storage engine. **Note** When installing systems with more than 12 disk shelves, you should install the additional loops in adjacent equipment racks. Install them starting with the first disk shelf in each loop in the middle of the equipment rack. The maximum distance between the storage engine and first disk shelf in a loop is 30 meters.

Installing the R200 storage engine

Installing the storage engine

To install your storage engine in a two-post equipment rack as a mid-mount installation, complete the following steps, using the figure for reference.

Note

See the *Easy Installation Instructions* and the *Telco Tray and Rail Kit Installation Instructions* flyer for flush-mount installation instructions.

WARNING

The storage engine is extremely heavy. To avoid personal injury, three people are required to install the storage engine when both power supplies are installed. When you install disk shelves and a storage engine into a rack, you must install the equipment from the bottom up to ensure the greatest stability.

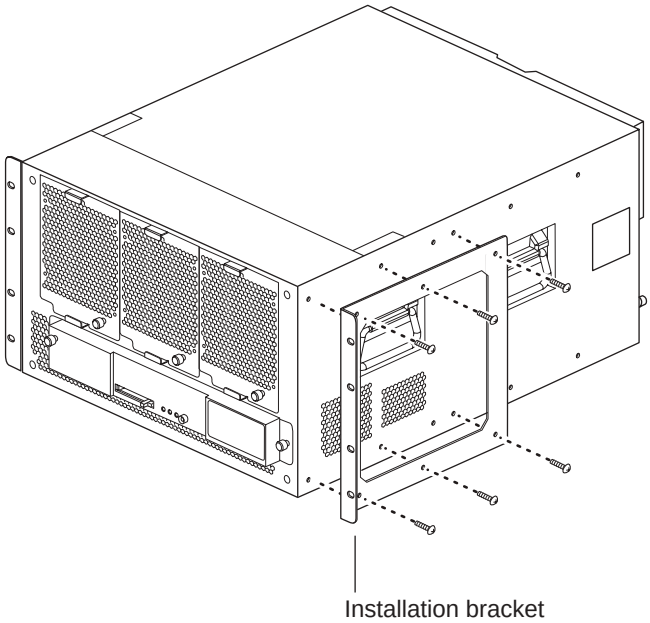

Step	Action	
1	Install a disk shelf tray to support the storage engine, as described in the accompanying kit flyer.	
2	Unscrew the installation brackets from the side of the storage engine.	
3	Set the mounting bracket to the furthest position back on the side of the storage engine and secure it to the side.	
4	Repeat Steps 2 and 3 for the other side of the storage engine.	
5	Align the mounting brackets with the small brackets attached to the equipment rack, then carefully slide the storage engine into place.	
6	Secure the storage engine to the two-post equipment rack by inserting the appropriate screws from the mounting kit through the mounting holes on each side of the bezel and into the front posts of the rack.	
7	If desired, apply the ear covers over the heads of the mounting screws by peeling the adhesive strip from the back of the ear covers and applying the ear covers to each mounting flange on the storage engine.	
8	**If you are installing a system with...**	**Then...**
	More than 12 disk shelves	**1.** Add additional FC-AL adapters to the storage engine, as needed, as described in "Installing or replacing expansion adapters" on page 81. **2.** Go to Chapter 2, "Connecting Your System," on page 11 for instructions about connecting the storage engine to the disk shelves and your network, connecting an ASCII terminal, and connecting your system to power.
	12 or fewer disk shelves	Go to Chapter 2, "Connecting Your System," on page 11 to complete setup.

Connecting Your System 2

About this chapter

This chapter describes all the connections for an R200 system.

Topics in the chapter

This chapter provides information about the following topics:

- "Connecting an R200 disk shelf" on page 12
- "Connecting third-party devices" on page 15
- "Connecting to an Ethernet network" on page 20
- "Connecting to a Fibre Channel network" on page 26
- "Connecting to an ASCII terminal console" on page 27
- "Connecting the system to a power source and powering on" on page 29

Connecting an R200 disk shelf

About connecting disk shelves to the storage engine

The following section describes how to cable the disk shelves to the storage engine. They are connected to the storage engine in pairs, one for each loop. Disk shelf numbering begins at the storage engine with disk shelf one and progresses outward to the maximum number of disk shelves for each loop.

Sequence of disk shelf connections

Connect the disk shelves to the storage engine in the sequence shown in the following figure.

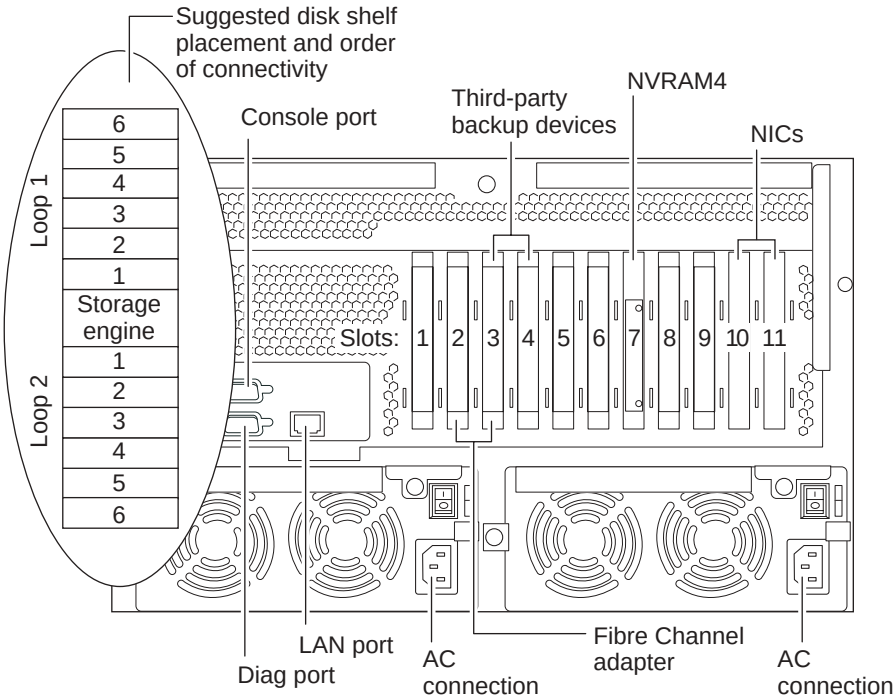

Connecting the disk shelves to the storage engine

To connect the disk shelves to the storage engine, complete the following steps, using the figure for reference.

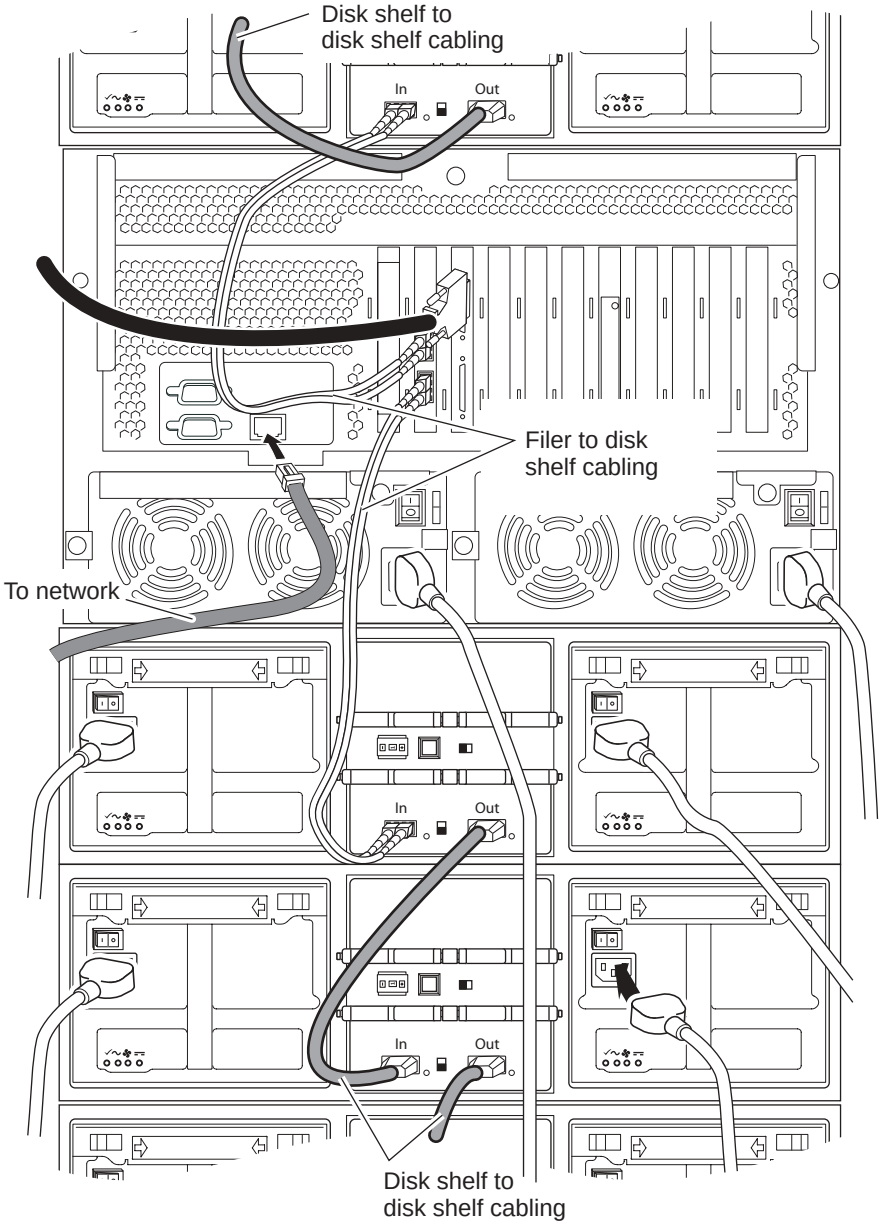

Step	Action
1	Put on the antistatic wrist strap and grounding leash.
2	Make sure that the storage engine and disk shelves are turned off.
3	Connect one end of the LC/LC optical cable to the top port of the Fibre Channel adapter, then connect the other end to the Input port of the first disk shelf in Loop 1.
4	Connect one end of the LC/LC optical cable to the bottom port of the Fibre Channel adapter, then connect the other end to the Input port of the first disk shelf in Loop 2.
5	If your system has more than two disk shelf loops, repeat Step 3 and Step 4 for each additional pair of disk shelf loops.
6	Connect one end of the HSSDC2 shelf-to-shelf cable to the Output port of the first disk shelf in the loop, then connect the other end to the Input port of the next disk shelf in the loop.
7	Repeat Step 5 until all disk shelves in the loops are cabled.
8	Set the Terminate switches to OFF on all but the last disk shelf in each loop. Set the Terminate switch to ON on the last disk shelf in each loop.
9	Set the disk shelf ID, from 1 to 6, for each disk shelf in both loops.

Connecting third-party devices

Rules for connecting the third-party devices

Observe the following rules for connecting the third-party devices:

- Use a cable that is
  - Appropriate to the tape adapter installed in your storage engine
  - Of an approved length for the third-party device

  Note
  See the documentation for the third-party device.

- Use the expansion slots assigned for tape adapters and the type of tape adapters installed in your storage engine, as identified in the System Configuration Guide at http://now.netapp.com.
- Use only supported tape backup devices. An unsupported tape backup device might cause the storage engine to halt. Verify support for your tape backup device in the System Configuration Guide at http://now.netapp.com.

Preparing the third-party devices

To prepare the third-party devices, complete the following steps.

Step	Action
1	Set the appropriate ID on the tape backup device. See the documentation that came with the tape backup device.
2	If you have a robotic loader on the tape backup device or a Fibre Channel switch, set its ID. See the documentation that came with the tape backup device or Fibre Channel switch.
3	Turn off all third-party devices.

For detailed information

For details about connecting to third-party devices, see the following topics:

- "Connecting a third-party SCSI tape backup device" on page 16
- "Connecting a third-party Fibre Channel switch" on page 18

Connecting a third-party SCSI tape backup device

Connecting a SCSI tape backup device

To connect a third-party SCSI tape backup device to your storage engine, complete the following steps.

Step	Action
1	Disable the target SCSI interface on the storage engine by entering the following command at the console: `storage disable adapter` ***`adapter_name`*** **Caution** Always disable the interface to avoid possible electrical damage to the adapter or the device.
2	Connect the cable provided with the tape backup device to the following points of connection: ◆ The appropriate port on the back panel of your storage engine ◆ The port on the tape backup device
3	Tighten each end of the cable.

Step	Action
4	Terminate any open port on the tape backup device with an active SCSI terminator. For information about terminating the open port, see the documentation for the tape backup device. 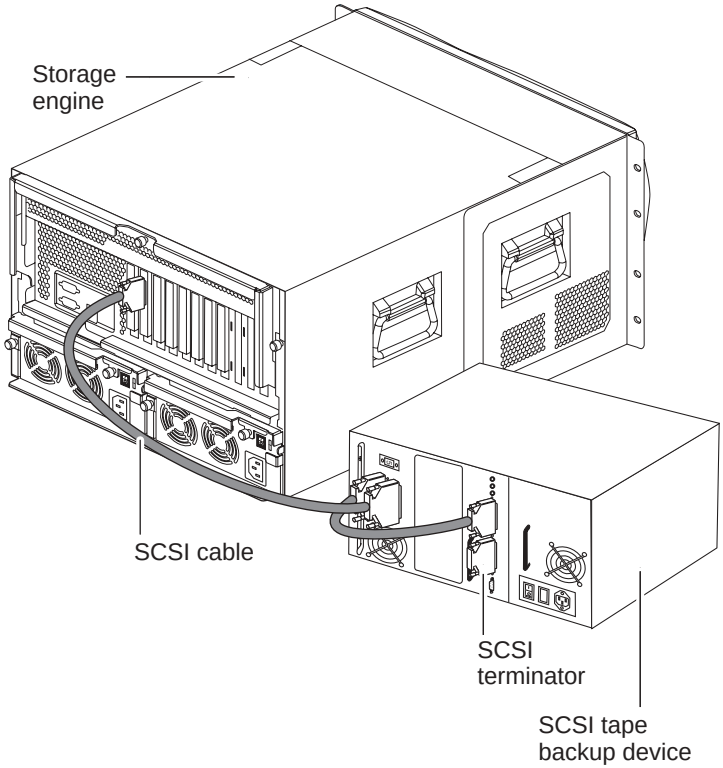
5	Enable the SCSI interface by entering the following command: **`storage enable adapter`** ***`adapter_name`***

Connecting a third-party Fibre Channel switch

Connecting a Fibre Channel switch

To connect a third-party Fibre Channel switch to your storage engine, complete the following steps.

Step	Action
1	Connect the cable provided with the Fibre Channel switch to the following points of connection: ◆ The appropriate port on the back panel of your storage engine ◆ An available port on the Fibre Channel switch 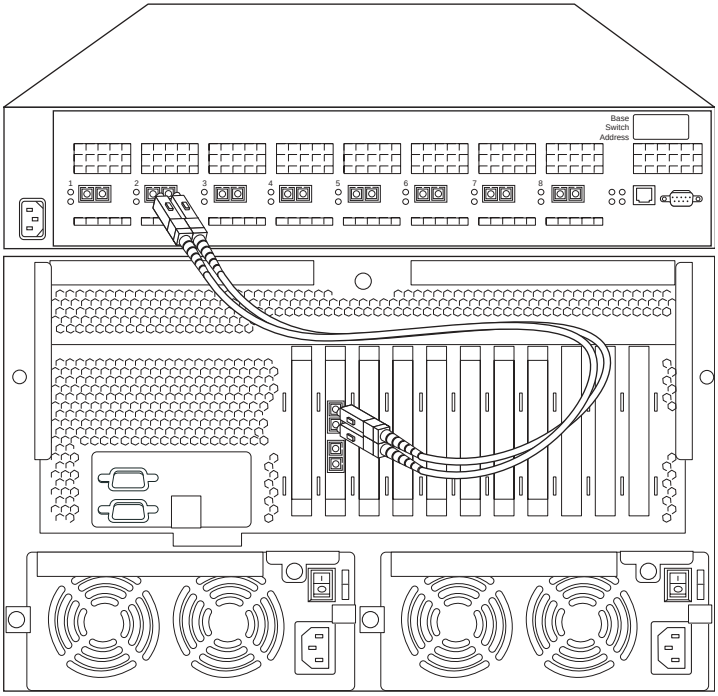

Step	Action
2	When connecting to a dual-channel Fibre Channel adapter in your storage engine, insert the duplex fiber optic cable into Port 1 and the LC loopback plug into Port 2 until they click and lock into place. 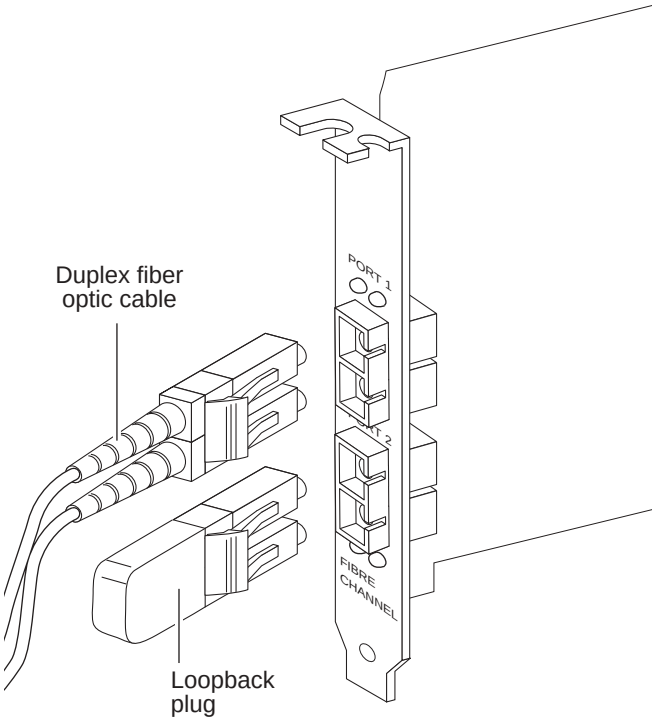

Connecting to an Ethernet network

Supported Ethernet connections

Your storage engine has one onboard 10Base-T/100Base-TX Ethernet port. It also supports the following Ethernet network interface cards (NICs) in PCI slots 5, and 8 through 11of your storage engine motherboard:

- Copper Gigabit Ethernet (GbE) NIC (with an RJ-45 connection)
- Fiber optic GbE NIC

Slot assignments on the storage engine

The following illustration shows the location of the onboard Ethernet port and the suggested slot locations for additional NICs, Fibre Channel adapter, NVRAM4 card, and backup devices.

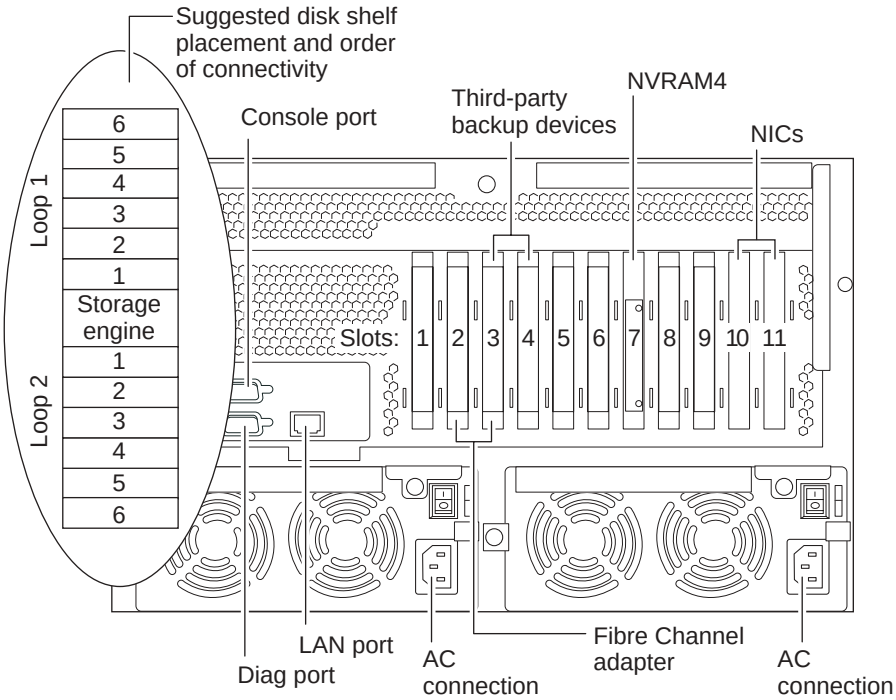

Note

The actual slot assignments might vary depending on the options ordered for your system. See the System Configuration Guide at http://now.netapp.com for the most current slot assignments.

Cabling requirements

Use the following table to determine the Ethernet connection and cabling requirements of your Ethernet NICs.

Caution

Do not exceed the maximum cable length specification.

Ethernet type	Supported ports	Cabling requirements	Distance
10Base-T/ 100Base-TX Copper	◆ Onboard	Category 3 (10Base-T only) or 5 (10Base-T/100Base-TX) unshielded twisted-pair (UTP) copper cable with RJ-45 connectors	100m max.
10Base-T/ 100Base-TX/ 1000Base-T Copper	◆ Single ◆ Dual ◆ Quad	Category 5 unshielded twisted-pair (UTP) copper cable with RJ-45 connectors	100m max.
1000Base-SX Fiber optic	◆ Single (SC port) ◆ Dual (LC port)	50-micron multimode fiber optic cable with SC or LC connector	550m max.
		62.5-micron multimode fiber optic cable with SC or LC connector	220m max.

Connecting to a copper GbE network

Connection options

You can connect through either of the RJ-45 connections:

- Single-port RJ-45 connection
- Dual-port RJ-45 connection
- Quad-port RJ-45 connection

Connecting through a single-port

To connect your storage engine to a single-port RJ-45 connector, complete the following step.

Step	Action
1	Place a ferrite on your cable about four inches from the NIC port. The ferrite is supplied by Networl Appliance.
2	Push the RJ-45 connector into the Ethernet port until it clicks and locks into place, as shown in the following figure. 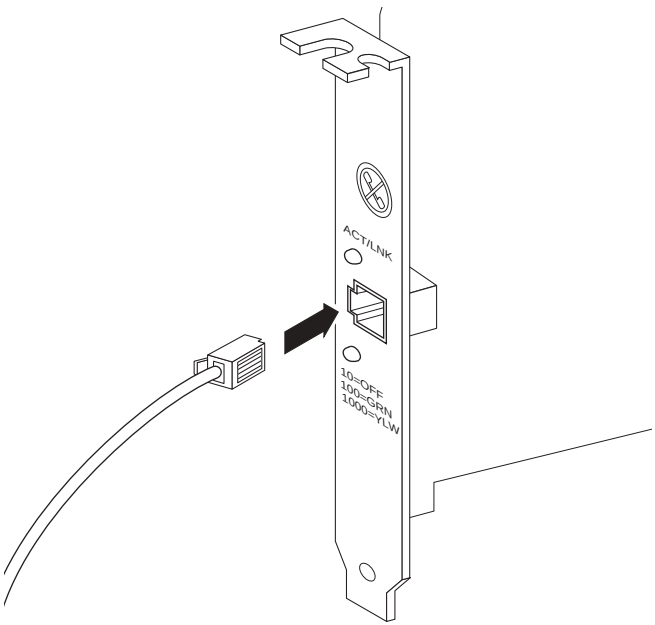

Connecting through a dual-port

To connect your storage engine to a dual-port RJ-45 connector, complete the following step.

Step	Action
1	Push the RJ-45 connector into the Ethernet port until it clicks and locks into place. Repeat this step to connect another network to the second port, as shown in the following figure. 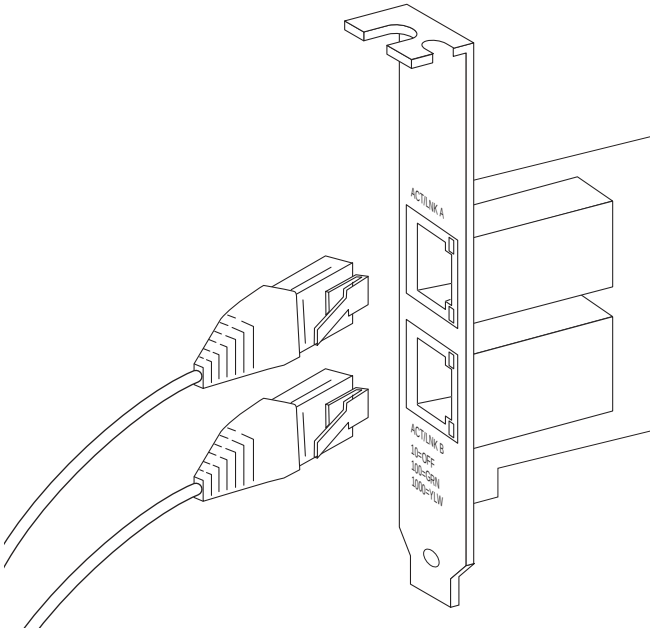

Connecting to a fiber optic GbE network

Connection options

You can connect through either of the following GbE connections:

- Single-port duplex fiber optic GbE connection
- Dual-port duplex fiber optic connection

Connecting through a single-port

To connect the storage engine to a single-port duplex fiber optic GbE connection, complete the following step.

Step	Action
1	Push the duplex fiber optic cable with the single-port SC connector into the ports on the NIC, until it clicks and locks into place, as shown in the following figure. 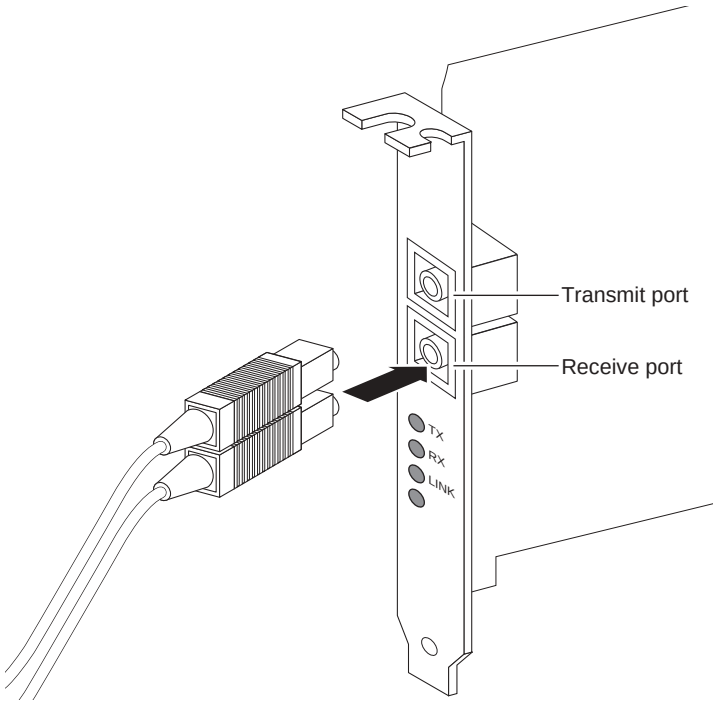

Connecting through a dual-port

To connect your storage engine to a dual-port fiber optic GbE connector, complete the following step.

Step	Action
1	Push the duplex fiber optic cable with the duplex fiber optic LC connector into the port on the NIC, until it clicks and locks into place. Repeat this step to connect another network to the second port, as shown in the following figure. 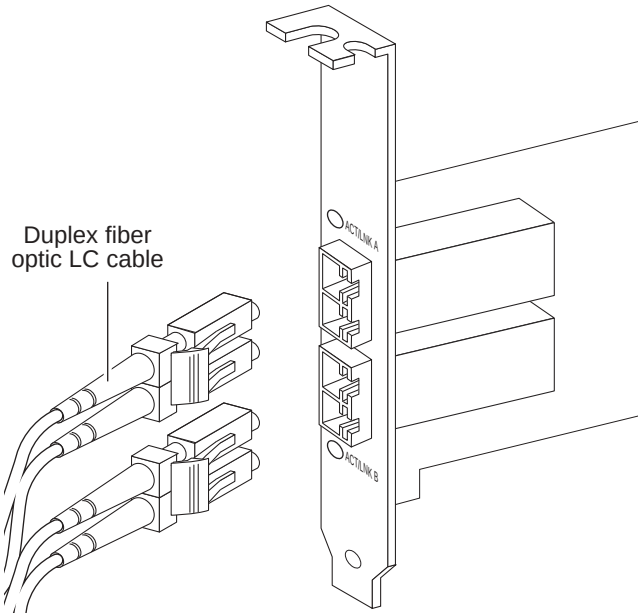

Connecting to a Fibre Channel network

Fibre Channel cabling requirements

The following types of cables and connectors are required for a Fibre Channel network:

- 50 micron multimode fiber optic cable with LC-to-LC connectors
- 62.5 micron multimode fiber optic cable with LC-to-LC connectors

Connecting to a Fibre Channel network

To connect the storage engine to a Fibre Channel network, complete the following steps.

Step	Action
1	Insert the duplex fiber optic cable connector into Port 1 on the dual-channel Fibre Channel adapter, until it clicks and locks into place. 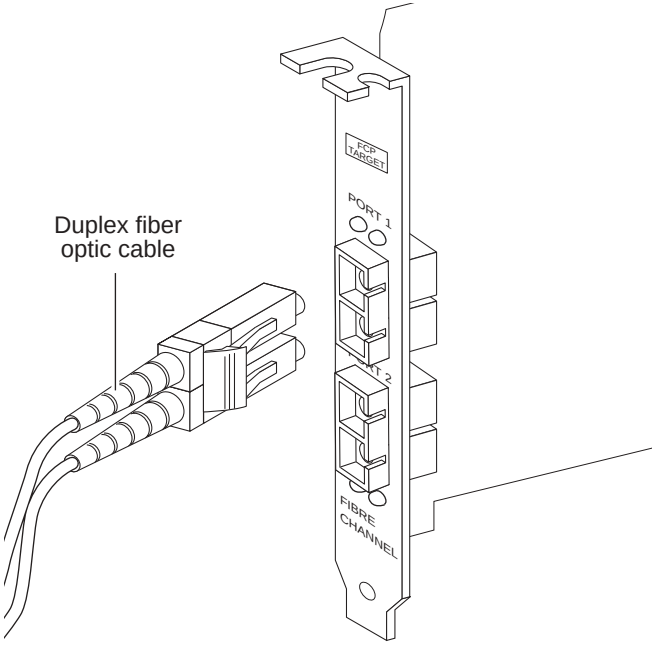
2	If applicable, repeat Step 1 for Port 2 on the Fibre Channel adapter.

Connecting to an ASCII terminal console

What the ASCII terminal console is for

The ASCII terminal console enables you to monitor the boot process and helps you configure the storage engine after it boots. Use an ASCII terminal attached through the serial port on the back of the storage engine if you want to perform system administration.

Note

Make sure that you are using an ASCII terminal console attached to the storage engine serial port, and that the display length is set to 25 lines.

ASCII terminal console cable wiring

The ASCII terminal console is connected to the storage engine with a DB-9 serial cable, attached to a DB-9 to RJ-45 converter cable, and then attached through the serial port on the back of the storage engine.

The following table lists how the DB-9 serial cable is wired. Input indicates data flow from the ASCII terminal to the storage engine and output indicates data flow from the storage engine to the ASCII terminal.

Pin number	Signal	Data flow direction	Description
1	DCD	Input	Data carrier detect
2	SIN	Input	Serial input
3	SOUT	Output	Serial output
4	DTR	Output	Data terminal ready
5	GND	N/A	Signal ground
6	DSR	Input	Data set ready
7	RTS	Output	Request to send
8	CTS	Input	Clear to send
9	RI	Input	Ring indicator

Connecting to an ASCII terminal console

To connect the storage engine to an ASCII terminal console, complete the following steps.

Step	Action	
1	Set the following communications parameters to the same values for both the storage engine and ASCII terminal.	
	Parameter	**Setting**
	Baud	9600
	Data bit	8
	Parity	None
	Stop bits	1
	Flow control	None
	Note See your terminal documentation for information about changing your ASCII console terminal settings.	
2	Connect the DB-9 serial cable to the DB-9 to RJ-45 converter cable, then connect the RJ-45 end to the console port on the storage engine and the other end to the ASCII terminal.	
3	Go to "Connecting the system to a power source and powering on" on page 29.	

Connecting the system to a power source and powering on

Sequence for powering on system components

You power on the components in your system in this sequence:

- Third-party devices, if applicable
- Disk shelves first
- Storage engine last

Caution

You must power on the storage engine after the disk shelves.

The disk shelves and disk drives require time to power on, reset, and prepare to respond to the storage engine. The storage engine expects these units to be ready for input/output when it powers on and performs its reset and self-test.

Power-on process

The power-on process for a new installation automatically

- Checks all connections to the storage engine
- Runs the `setup` command

For detailed information

For details about connecting the system to a power source and powering on, see the following topics:

- "Connecting the disk shelves to AC power" on page 30
- "Connecting the storage engine to AC power" on page 32

Connecting the disk shelves to AC power

About AC power supplies

The disk shelf is shipped with two power supplies with integrated fan units and an AC power cord for each power supply. These power supplies are keyed, to prevent inserting the wrong power supply into the disk shelf. The power supplies are labeled PSU1 and PSU2, respectively.

Connecting and powering on the R200 disk shelves

To connect each disk shelf to an AC power source and power it on, complete the following steps.

Step	Action
1	Make sure that the storage engine and the disk shelves are turned off.
2	Plug the power cord for PSU1 into the power receptacle on the right connector (rear view).
3	Plug the power cord for PSU2 into the power receptacle on the left connector (rear view).
4	Plug the other end of each power cord into separate grounded AC power sources. **Caution** To obtain power supply redundancy, make sure that you connect the second power supply to a separate AC circuit.
5	Fasten the power cord with the clamp.
6	Turn the power switch of each power supply to the On position. **Result:** The disk shelf lights illuminate, indicating system activity. **Note** The default spin-up time for all disks in the disk shelf is 60 seconds. Reduce this spin-up time to 20 seconds by turning on the switches of both power supplies within 5 seconds of each other.

Step	Action
7	Make sure that the following LEDs illuminate: ◆ Front panel LEDs ◆ Power supply LEDs The LED responses are described in "Disk shelf LED responses at startup" on page 45. **Note** If the LEDs do not illuminate, contact Network Appliance Technical Support.

Connecting the storage engine to AC power

Connecting the storage engine

To connect the storage engine to an AC power source and power it on, complete the following steps.

Step	Action
1	Turn on any third-party devices, if applicable.
2	Power on the disk shelves. See "Connecting the disk shelves to AC power" on page 30. **Caution** You must power on the storage engine after the disk shelves. The disk shelves and disk drives require time to power on, reset, and prepare to respond to the storage engine, which expects these units to be ready for input/output when it powers on and performs its reset and self-test.
3	Confirm that the power switch on each power supply is in the Off (0) position.
4	Connect the socket end of the supplied power cord to the recessed power plug on the power supply.
5	Secure the power cord with the retaining clip on the power supply.
6	Plug the other end of the power cord into a grounded electrical outlet.
7	Repeat Steps 4 through 6 for the second power supply. **Caution** To obtain power supply redundancy, make sure that you connect the second power supply to a separate AC circuit.
8	Turn the power switch on the power supplies to the On (l) position. **Result:** The system verifies the hardware and loads the operating system.

Step	Action
9	Make sure that the following LEDs illuminate: ◆ Front panel LEDs ◆ Power supply LEDs ◆ Network port LEDs **Note** If the LEDs do not illuminate, contact Network Appliance Technical Support.
10	Check the startup messages as they appear on the console or LCD. **Note** If the startup messages do not appear, contact Network Appliance Technical Support.
11	Go to the *Getting Started Guide* when the following default host name prompt appears on the console screen: `toaster>`

Startup Responses 3

About this chapter

This chapter describes the following startup responses from the R200 system:

- Storage engine LED responses from the various hardware components
- Disk shelf LED responses from the various hardware components on the disk shelf

Topics in this chapter

This chapter describes the following topics:

- "Storage engine LED responses at startup" on page 36
- "Disk shelf LED responses at startup" on page 45
- "Startup messages" on page 49

Storage engine LED responses at startup

Types of LED responses

The storage engine and various hardware components on the storage engine have startup responses from the following LEDs:

- Front panel
- FC-AL adapters
- GbE adapters
- Power supplies

For detailed information

For details about storage engine LED responses at startup, see the following topics:

- "Front panel LEDs" on page 37
- "FC-AL/FC HBA LEDs" on page 39
- "GbE NIC LEDs" on page 41
- "Power supply LEDs" on page 44

Front panel LEDs

Location of front panel LEDs

The following illustration shows the LEDs on the front panel of the storage engine.

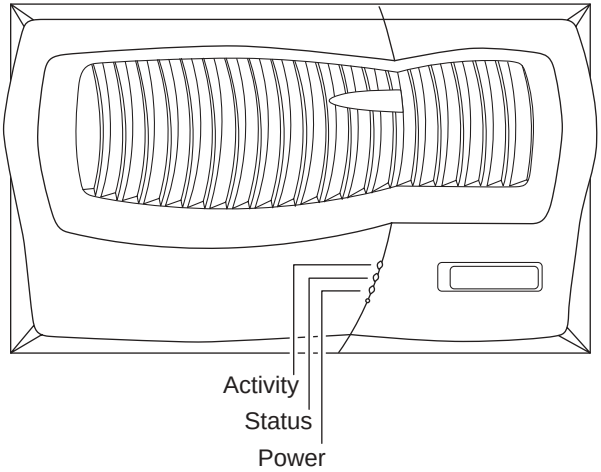

Description of front panel LEDs

The following table describes the front panel LEDs.

LED	State of illumination	Explanation
Activity	Green	The system is operating and is active.
	Blinking	The system is actively processing data.
	Off	No activity is detected.

LED	State of illumination	Explanation
Status	Green	The system is operating normally.
	Amber	The system halted or a fault occurred. The fault is displayed in the LCD. **Note** This LED remains lit during boot, while the operating system loads.
Power	Green	The system is receiving power.
	Off	The system is not receiving power.

FC-AL/FC HBA LEDs

Location of the LEDs

The dual-port Fibre Channel adapter (FC-AL) and the Fibre Channel Host Bus Adapter (FC HBA) can be used in two modes: Initiator and Target. The R200 always uses FC HBA card in Target mode. The LEDs on both cards are the same color and in the same location, but the Status and Activity indications are different.

The following illustration shows the LED locations for a dual-port Fibre Channel HBA.

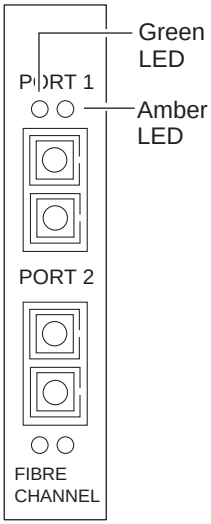

What the initiator mode LEDs mean

The following table describes the LEDs on the dual-port Fibre Channel HBA in Initiator mode.

Green	Amber	Indicates…
On	On	Power
Off	Flashing	Loss of synch
Off	On	Signal acquired
On	Off	Ready
Flashing	Flashing	Adapter firmware error

What the target mode LEDs mean

The following table describes the LEDs on the Fibre Channel HBA in Target mode.

Green	Amber	Indicates…
On	On	Power On
Off	Flashing	Loss of synch
Off	On	Signal acquired
On	Off	Online
Flashing	Flashing	Adapter firmware error

GbE NIC LEDs

Location of the LEDs for single port GbE NICs

The following illustration shows the location of LEDs for both the copper and fiber single port GbE NICs.

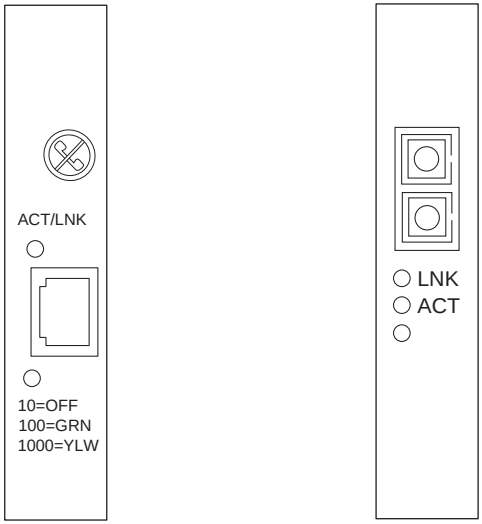

Copper
10Base-T/100Base-TX/1000Base-TX

Fiber
1000Base-SX

Location of LEDs on multi-port GbE NICs

The following illustration shows the location of LEDs for both the copper and fiber dual-port GbE NICs.

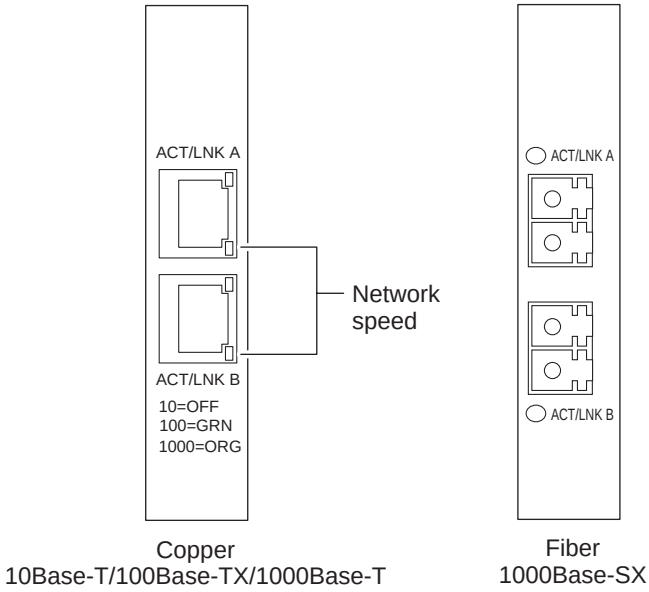

What the copper GbE NIC LEDs mean

The following table explains what the LEDs on the copper GbE NIC mean.

Note

The LEDs on the quad-port copper GbE NIC are the same as those on the dual-port copper GbE NIC.

LED type	Status indicator	Description
ACT/LNK	Green	A valid network connection is established.
	Blinking green	Data is being transmitted across the network.
	Off	There is no network connection present.

LED type	Status indicator	Description
10=OFF	Off	Data transmits at 10 Mbps.
100=GRN	Green	Data transmits at 100 Mbps.
1000=YLW	Yellow	Data transmits at 1,000 Mbps.

What the fiber GbE NIC LEDs mean

The following table explains what the LEDs on the fiber GbE NIC mean.

LED type	Status indicator	Description
LNK	On	A valid network connection is established.
	Off	There is no network connection present.
ACT	On	Data is being transmitted across the network.
	Off	There is no network activity present.

Power supply LEDs

Location of LEDs

The following illustration shows the location of the LEDs on your storage engine's power supplies.

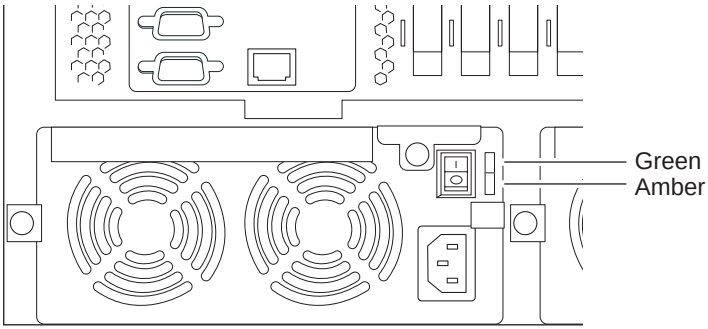

What the LEDs on your power supplies mean

The following table explains what the LEDs on your storage engine power supplies mean.

LED type	Status indicator	Description
Power supply LED	Green only	The AC power source is good and is powering the system.
	Blinking green	The AC power source is good and the power supply is in standby mode.
	Amber and green	The AC power source is good, but no power is reaching the power supply or the power supply failed.
	Off	There is no power to this power supply.

Disk shelf LED responses at startup

About this section

This section discusses the types and functions of each LED on the front of the disk shelf.

Location of LEDs on the front panel

The disk shelf LEDs are displayed on the front side of the disk shelf, as shown in the following illustration.

Note

A tray beneath each disk shelf contains a list of LED status indicators.

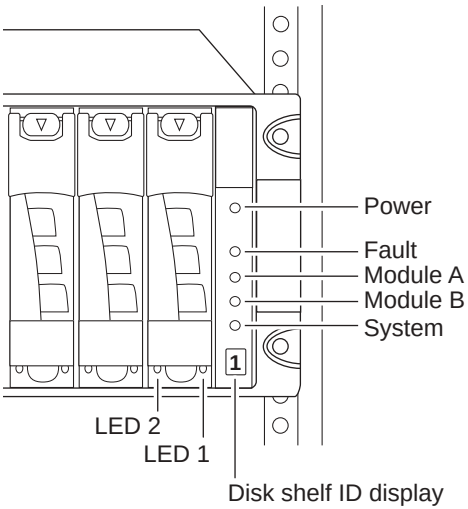

Interpreting the front panel disk shelf LEDs

The following illustration shows the first sheet of the quick reference cards that come with each disk shelf. It shows the normal and fault conditions that the LEDs indicate, and recommends corrective action

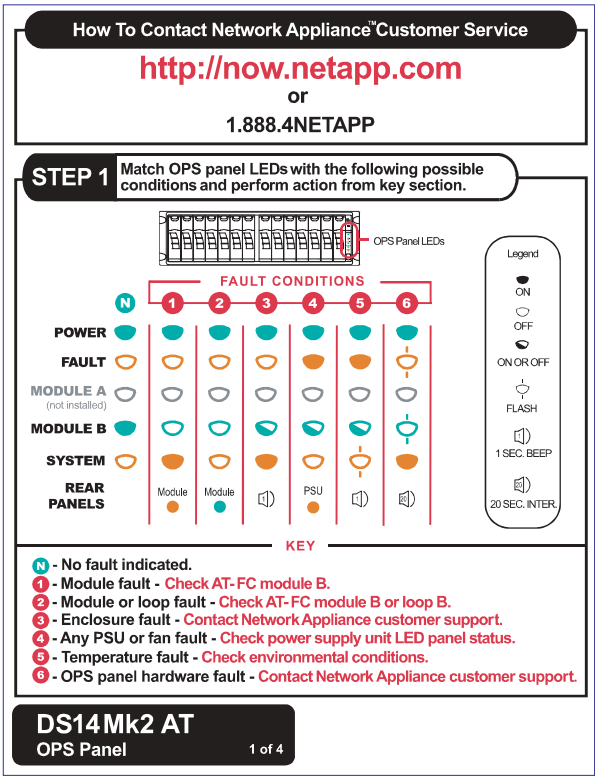

Interpreting disk drive LEDs

The following illustration shows the top of the second sheet of the quick reference cards that come with each disk shelf. It shows the disk drive LEDs normal and fault conditions, and recommends corrective action.

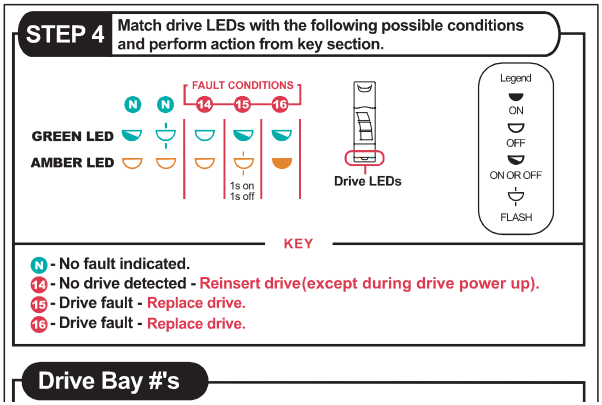

Location of LEDs on the AT-FC

The AT-FC module is in the middle of the back of the disk shelf. It has a perforated carrier. The following illustration shows LED and port locations of the AT-FC.

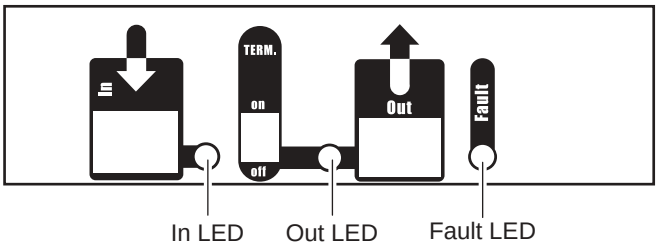

Interpreting the AT-FC and disk shelf LEDs

The following illustration shows the top of the back of the first sheet of the quick reference cards that come with each disk shelf. It shows the AT-FC module LEDs that indicate normal and fault conditions, and recommends corrective action

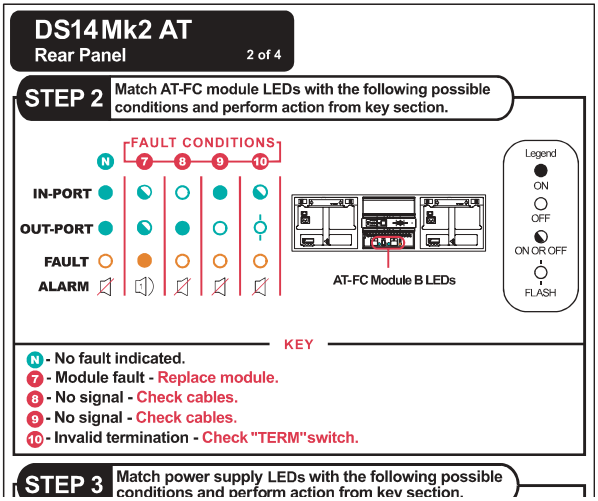

Startup messages

Startup sequence

When you apply power to the storage engine, it executes a series of tests on the system components. Samples of the output from a normal boot are found in the following sections:

- "Normal POST messages" on page 49
- "Normal boot messages" on page 50

Normal POST messages

POST is a series of tests run from the motherboard PROM. These tests check the hardware on the motherboard and differ depending on your system configuration. The following series of messages are examples of POST messages displayed on the console.

Header:

```
Intel Open Firmware by FirmWorks
```

```
Copyright 1995-2003 FirmWorks, Network Appliance. All Rights
Reserved.
```

```
Firmware release x.x_in
```

POST messages:

```
Memory size is 6144 MB
```

```
Testing SIO
```

```
Testing LCD
```

```
Probing devices
```

```
Memory size: 6144MB
```

```
Testing 512MB
```

```
Complete
```

```
Finding image...
```

```
Loading /pc-card:1,\x86\kernel\primary.krn
```

Note

The storage engine LCD displays only the POST messages without the preceding header.

Normal boot messages

After the boot is successfully completed, the storage engine loads the operating system. The following message is an example of the boot message that appears on the system console at first boot. The exact boot messages that appear on your system console depend on your system configuration.

```
Wed Aug 13 22:55:05 GMT [fmmbx_instanceWorke:info]: Disk 11a.28
is a primary mailbox disk
Wed Aug 13 22:55:05 GMT [fmmbx_instanceWorke:info]: normal
mailbox instance on primary side
Wed Aug 13 22:55:11 GMT [raid.cksum.replay.summary:info]:
Replayed 0 checksum blocks.
Wed Aug 13 22:55:11 GMT [raid.stripe.replay.summary:info]:
Replayed 0 stripes.

Loading volume vol2

Loading volume vol1

Loading volume vol3

Loading volume vol0

.
.
.
Wed Aug 13 15:55:24 PDT [10/100-IV/e0:info]: Ethernet e0: Link
up.
Wed Aug 13 15:55:24 PDT [10/100/1000-V/e5b:info]: Ethernet e5b:
Link up.
add net default: gateway 172.16.161.1
NFS server is running.
Wed Aug 13 15:55:26 PDT [mgr.boot.disk_done:info]: NetApp
Release X.X.X boot complete.  Last disk update written at Wed
Aug 13 15:53:02 PDT 2003
Wed Aug 13 15:55:26 PDT [mgr.boot.reason_ok:notice]: System
rebooted after power-on.
Wed Aug 13 15:55:26 PDT [main_proc:notice]: Starting Processor
#1.
Wed Aug 13 15:55:26 PDT [main_proc:notice]: Processor 1 (APIC
ID 6) started.

toaster>
```

Replacing Disk Shelf Components 4

About this chapter

This chapter describes how to replace disk shelves in a rack, disks in a disk shelf, and other devices.

Topics in this chapter

This chapter provides information about the following topics:

- "Replacing a disk shelf in a rack" on page 52
- "Replacing a disk in a disk shelf" on page 53
- "Replacing a power supply in a disk shelf" on page 56
- "Replacing the AT-FC module" on page 59

Replacing a disk shelf in a rack

About replacing a disk shelf

Replacing a disk shelf consists of the following procedures:

- "Removing a disk shelf from a rack" on page 52
- "Installing the disk shelves in a mid-mount configuration" on page 6

Removing a disk shelf from a rack

To remove a disk shelf from a rack, complete the following steps.

Step	Action
1	Put on the antistatic wrist strap and grounding leash.
2	Shut down the storage engine by entering the following command at the console: `halt` **Caution** Always use the `halt` command to perform a clean shutdown. The LCD on the storage engine displays `Halted` when the system is halted.
3	Turn off and unplug the power to the storage engine and the disk shelf.
4	Disconnect the two disk shelf power cords from the target disk shelf.
5	Disconnect any disk shelf cables from the target disk shelf.
6	Use a Phillips screwdriver to remove the screws securing the disk shelf to the Telco tray or the mid-mount bracket.
7	Remove the disk shelf from the rack. **WARNING** **At least two people must remove the disk shelf, because it is very heavy when fully loaded.**

Replacing a disk in a disk shelf

About replacing a disk

Disk drives are hot swappable; you can replace them while the system remains powered on. If a disk in your R200 disk shelf fails, the storage engine logs a warning message to the system console indicating which disk on which disk shelf failed.

For detailed information

For details about replacing a disk in a disk shelf, see the following topics:

- "Removing a disk from a disk shelf" on page 54
- "Installing a disk in a disk shelf" on page 55

Removing a disk from a disk shelf

Removing a disk

To remove a disk, complete the following steps.

Step	Action
1	While grounded, press down on the release mechanism button on the locking lever and swing the locking lever downward to disengage the disk from the backplane.
2	Wait 30 seconds for the disk to stop spinning.
3	Gently slide the disk out of the disk shelf. **WARNING** **When removing a disk, always use two hands to support its weight.**

Installing a disk in a disk shelf

Installing a disk

To install a disk in a disk shelf, complete the following steps.

Step	Action
1	While grounded, insert the disk drive carrier into the guide slot in the disk shelf and firmly push it in until it engages the backplane. The locking lever begins to swing upward when the drive is seated. **Caution** Do not slam the device carrier into place.
2	Swing the locking lever upward and push it into place until it locks.

Replacing a power supply in a disk shelf

About replacing a disk shelf power supply

Replacing a disk shelf power supply consists of the following procedures:

- Removing a power supply from a disk shelf
- Installing a power supply in a disk shelf

Rules for replacing power supplies

When replacing a disk shelf power supply, observe the following rules:

- You do not need to turn off the power when you replace one of the two power supplies.
- If you are replacing both power supplies in the same disk shelf, replace them one at a time to avoid powering down the disk shelf.

For detailed information

For details about replacing a disk shelf power supply, see the following topics:

- "Removing a power supply from a disk shelf" on page 57
- "Installing a power supply in a disk shelf" on page 58

Removing a power supply from a disk shelf

Removing a power supply

To remove a power supply from a disk shelf, complete the following steps.

Step	Action
1	Put on the antistatic wrist strap and grounding leash.
2	Turn off the power supply that you are replacing and disconnect the AC power cord. **Note** SES and fan messages are displayed on the console when you turn off the power to the power supply. This is normal, and continue until the power supply is turned back on.
3	Press the cam mechanism levers toward each other to release the power supply handle, as shown in the following illustration. 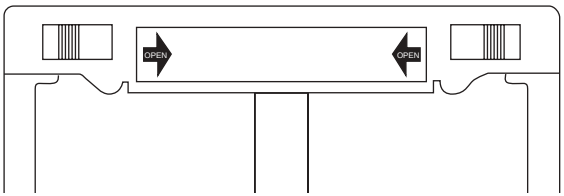
4	Pull the power supply out of the disk shelf, using the handle. **WARNING** **When removing a power supply, always use two hands to support its weight.**

Installing a power supply in a disk shelf

Installing a power supply

To install a power supply in a disk shelf, complete the following steps.

Step	Action
1	Put on the antistatic wrist strap and grounding leash.
2	Slide the power supply into the disk shelf until you hear the power supply connect with the connector inside the disk shelf chassis. **Caution** Do not use excessive force when sliding the power supply into the disk shelf; you can damage the connector.
3	Raise the handle on the power supply and push it into place.
4	Press the cam mechanism levers toward each other to engage the power supply into place.
5	Connect the AC power cord to the back of the disk shelf.
6	Turn on the power supply.

Replacing the AT-FC module

About the AT-FC

The AT-FC module controls the external disk shelf LEDs. The AT-FC is field-replaceable; however, it is not hot-swappable—you must power down the disk shelf before replacing the module. The AT-FC module communicates In-Band to the host system through its Fibre Channel port, which is connected to the backplane of the disk shelf.

Replacing the AT-FC consists of the following procedures:

- "Removing an AT-FC" on page 60
- "Installing an AT-FC" on page 61

Location of the AT-FC

The AT-FC is plugged into the backplane at the back of the enclosure.

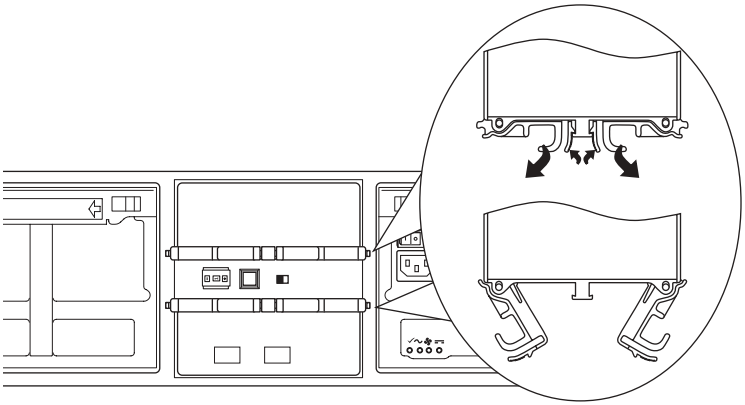

Removing an AT-FC

Removing an AT-FC

To remove an AT-FC from a disk shelf, complete the following steps.

Step	Action
1	Put on the antistatic wrist strap and grounding leash.
2	Shut down the storage engine by entering the following command at the console: `halt` **Caution** Always use the `halt` command to perform a clean shutdown. The LCD on the storage engine displays `Halted` when the system is halted.
3	Turn off the power and unplug both power cables to the disk shelf, and then remove the remaining cables from the AT-FC on that disk shelf.
4	Press the levers on the cam mechanism on the AT-FC to release it.
5	Carefully remove the AT-FC from the back side of the disk shelf and place it on a nonconductive/antistatic surface.
6	Go to “Installing an AT-FC” on page 61.

Installing an AT-FC

Installing an AT-FC

To install an AT-FC in a disk shelf, complete the following steps.

Step	Action
1	Put on the antistatic wrist strap and grounding leash, then check to make sure that the power is off to the storage engine and disk shelf.
2	Push apart the levers on the cam mechanism and slide the AT-FC into the slot at the rear of the disk shelf, and then push the levers of the cam mechanism into place. **Caution** Do not use excessive force when sliding the AT-FC into the disk shelf; you might damage the connector.
3	Connect both AC power cords back into the disk shelf and recable the AT-FC.
4	Turn on the power supplies and reboot the system.

Replacing Storage Engine Components 5

About this chapter

This chapter lists field-replaceable units (FRUs) that are available for your storage engine, and describes the tasks you must complete to replace each type of FRU.

Topics in this chapter

This chapter discusses the following topics:

- "Field-replaceable unit overview" on page 64
- "Opening the PCB carrier" on page 65
- "Removing the PCB carrier" on page 67
- "Replacing the motherboard" on page 69
- "Replacing the memory card assembly" on page 74
- "Replacing SDRAM DIMMs on the memory card assembly" on page 77
- "Installing or replacing expansion adapters" on page 81
- "Closing the PCB carrier" on page 85
- "Replacing fan subassemblies" on page 86
- "Replacing the power supplies" on page 90
- "Replacing the control panel subassembly" on page 94

Field-replaceable unit overview

About FRUs

A FRU is a component in your appliance that you can replace if it fails. FRUs must be purchased through Network Appliance or from an authorized reseller.

Units you can replace

The following list specifies the storage engine FRUs:

- Motherboard tray, including PCB carrier
- Motherboard lithium system battery
- Memory card assembly
- DDR SDRAM DIMMs on the memory card assembly
- Expansion adapters
  - NVRAM 4 (nonvolatile random access memory) adapter
  - Fibre GbE network adapter
  - Copper GbE network adapter
  - FC-AL adapters
  - Fibre Channel target mode adapter
  - Fibre Channel tape backup adapter
  - SCSI tape backup adapter
- Fan assembly
- Power supply assemblies
- Bezel
- Control panel assembly
- CompactFlash™ Card

What to do if the failed item isn't on the FRU list

If you need to replace a component that is not in the FRU list, call Network Appliance Customer Support for instructions.

Opening the PCB carrier

Reasons to open the PCB carrier

You open the PCB carrier to access the motherboard tray, memory card assembly, expansion adapters, and other FRUs.

Opening the PCB carrier

To open the PCB carrier for access to the internal FRUs, complete the following steps, using the figure for reference.

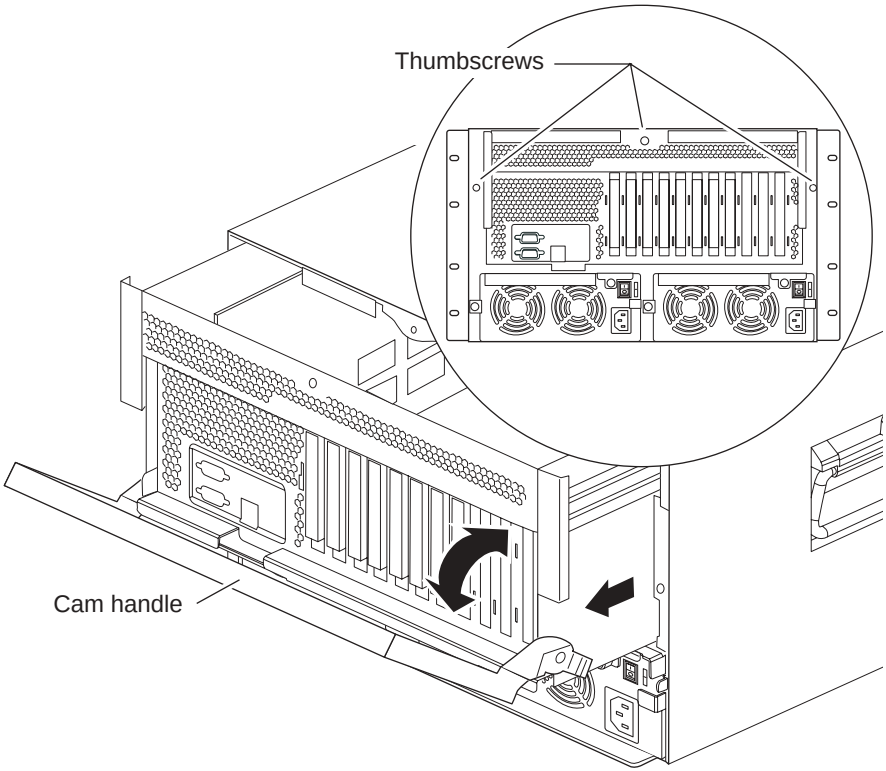

Step	Actions
1	Shut down the storage engine by entering the following command at the console: **`halt`** **Caution** Always use the `halt` command to perform a clean shutdown. The LCD on the storage engine displays `Halted` when the system is halted.
2	Turn off and disconnect the power to the storage engine.
3	Put on the antistatic wrist strap and attach the grounding leash to the storage engine chassis.
4	Remove the cable management tray.
5	Loosen the three thumbscrews on the back panel of the PCB carrier.
6	Carefully pull the cam handle so that the PCB carrier slides out from the chassis until the carrier tabs click to lock the slide rails in place. The PCB carrier has a travel distance of approximately 19 inches (48.26 centimeters).

Removing the PCB carrier

Reasons for removing the PCB carrier

You must remove the PCB carrier from the storage engine if you are replacing the motherboard tray. You can also remove the PCB carrier to replace components, such as the memory card assembly and expansion adapters.

Removing the PCB carrier

To remove the PCB carrier from your appliance, complete the following steps, using the figure for reference.

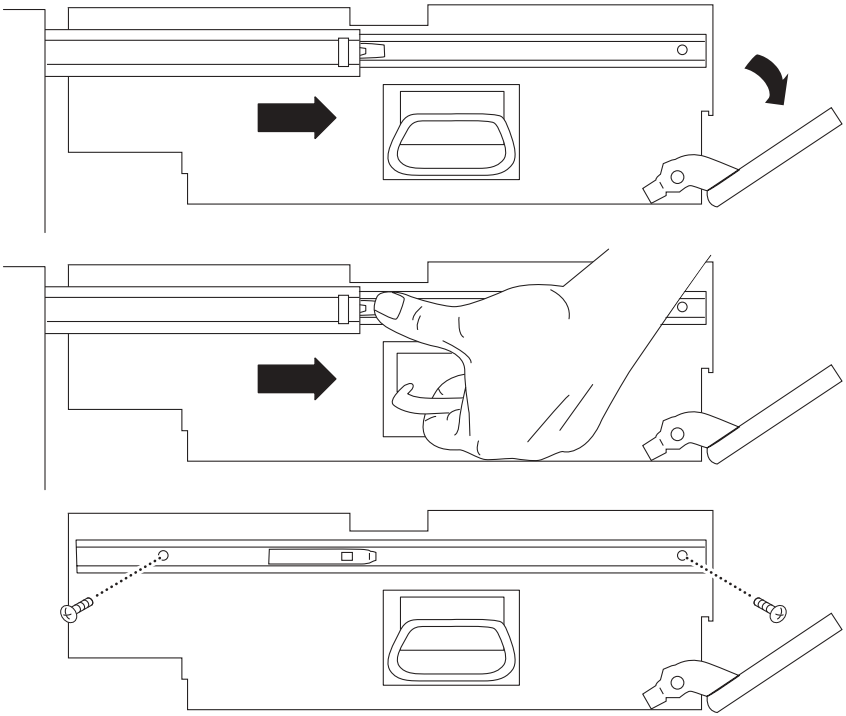

Step	Action
1	Open the PCB carrier by following the procedure described in "Opening the PCB carrier" on page 65.

Step	Action	
2	With the PCB carrier completely extended, press inward on the carrier tabs on each slide rail and pull and lift the PCB carrier out of the storage engine chassis. Make sure that you remove the slide rails on the PCB carrier before sending it for replacement.	
3	Support the PCB carrier with both hands and set it aside.	
4	**If you are…**	**Then…**
	Replacing the motherboard	Go to "Replacing the motherboard" on page 69.
	Not replacing the motherboard, but you are replacing units on it	Go to the appropriate procedure for the unit you are replacing: ◆ "Replacing SDRAM DIMMs on the memory card assembly" on page 77 ◆ "Replacing the memory card assembly" on page 74 ◆ "Installing or replacing expansion adapters" on page 81

Replacing the motherboard

About replacing the motherboard

Replacing the motherboard consists of the following procedures:

- "Removing the motherboard tray" below
- "Installing the motherboard tray" on page 70

Removing the motherboard tray

To remove the motherboard tray, complete the following steps.

Caution

To prevent shorting the NVRAM4 battery, you must perform this procedure on a nonconductive surface. Shorting the NVRAM4 battery causes data loss.

Step	Action
1	Shut down the storage engine by entering the following command at the console: `halt` **Caution** Always use the `halt` command to perform a clean shutdown. The LCD on the storage engine displays `Halted` when the system is halted.
2	Open the PCB carrier by following the procedure described in "Opening the PCB carrier" on page 65. **Note** When the motherboard fails, the storage engine performs a "dirty shutdown." This prevents you from performing the recommended clean shutdown. However, the data from the last transaction is still buffered in the battery-backed memory on the NVRAM 4 adapter.
3	Remove all adapters by following Steps 2 through 6 of the procedure described in "Removing an existing expansion adapter" on page 82. If your PCI expansion adapters are secured by screws, set the screws and adapters aside for later use.

Step	Action
4	Remove the memory card assembly by following the procedure described in "Replacing the memory card assembly" on page 74.
5	Remove the PCB carrier from the storage engine chassis by following Steps 2 through 4 of the procedure described in "Removing the PCB carrier" on page 67.
6	Unscrew the slides from the PCB carrier using a #2 Phillips screwdriver and set them aside for your replacement motherboard. The motherboard tray includes the PCB carrier, empty of all other FRUs.

Installing the motherboard tray

To install the motherboard tray, complete the following steps.

Step	Action
1	Using a #2 Phillips screwdriver, secure the rails on the side of the PCB carrier.
2	Install the memory card assembly by following the procedure described in "Replacing the memory card assembly" on page 74.
3	Reinstall all other adapters into the expansion slots on the motherboard by following Steps 3 through 6 of the procedure described in "Installing an expansion adapter" on page 84.
4	Pull the inner slides from the storage engine's chassis to full extension, then carefully align the PCB carrier rails with the inner slides.
5	Slide the PCB carrier into the storage engine chassis. **Note** If the PCB carrier gets stuck while the inner slides are extended, reach inside the storage engine chassis and hold the locking mechanism straight so that the slides are not obstructed.
6	Reconnect the storage engine to the your network.

Step	Action
7	Reconnect the storage engine to AC power, and power on.
8	Go to the NOW site at http://now.netapp.com to download the latest firmware.
9	Run diagnostics for your system. See the *Diagnostics Guide* for more information.

Replacing the motherboard lithium battery

About replacing the motherboard lithium battery

Replacing the 3.3V lithium battery on the motherboard consists of the following procedures:

- "Removing the motherboard lithium battery" below
- "Installing the motherboard lithium battery" on page 73

Removing the motherboard lithium battery

To remove the motherboard lithium battery, complete the following steps.

Step	Action
1	Open the PCB carrier. Follow the procedure in "Opening the PCB carrier" on page 65. **Caution** Put on an antistatic wrist strap and attach the grounding leash to the storage engine chassis.
2	Lift up the battery toward the open side of the battery holder, as shown. 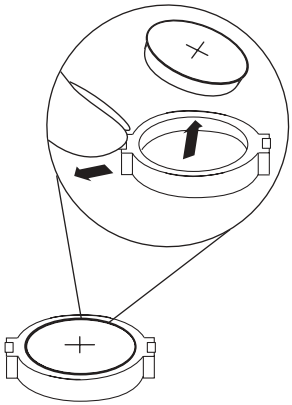

Installing the motherboard lithium battery

To install the motherboard lithium battery, complete the following steps.

WARNING

Danger of explosion if battery is incorrectly replaced. Replace only with the same or equivalent type recommended by the manufacturer. Dispose of used batteries according to manufacturer's instructions.

AVERTISSEMENT

Il y a danger d'explosion s'il y a remplacement incorrect de la pile. Remplacer la pile seulement avec une pile du même type ou d'un type équivalent recommandé par le fabricant. Mettre au rebut les piles usagées selon les instructions du fabricant.

ACHTUNG

Explosionsgefahr bei unsachgemäßem Austausch der Batterie. Die Batterien nur durch denselben oder einen vom Hersteller empfohlenen gleichwertigen Typ ersetzen. Gebrauchter Batterien nach Angaben des Herstellers loswerden.

Step	Action
1	Turn the battery so that the positive side is up (marked with a "+").
2	Push the battery through the open side of the battery holder so that it sits flush inside the battery holder.
3	Go to "Closing the PCB carrier" on page 85.

Replacing the memory card assembly

About replacing the memory card assembly

The memory card assembly contains the SDRAM DIMMs of your system and is connected to the motherboard. Replacing the memory card assembly consists of the following procedures:

- "Removing the memory card assembly" on page 74
- "Installing the memory card assembly" on page 75

Removing the memory card assembly

To remove the memory card assembly, complete the following steps, using the figure for reference.

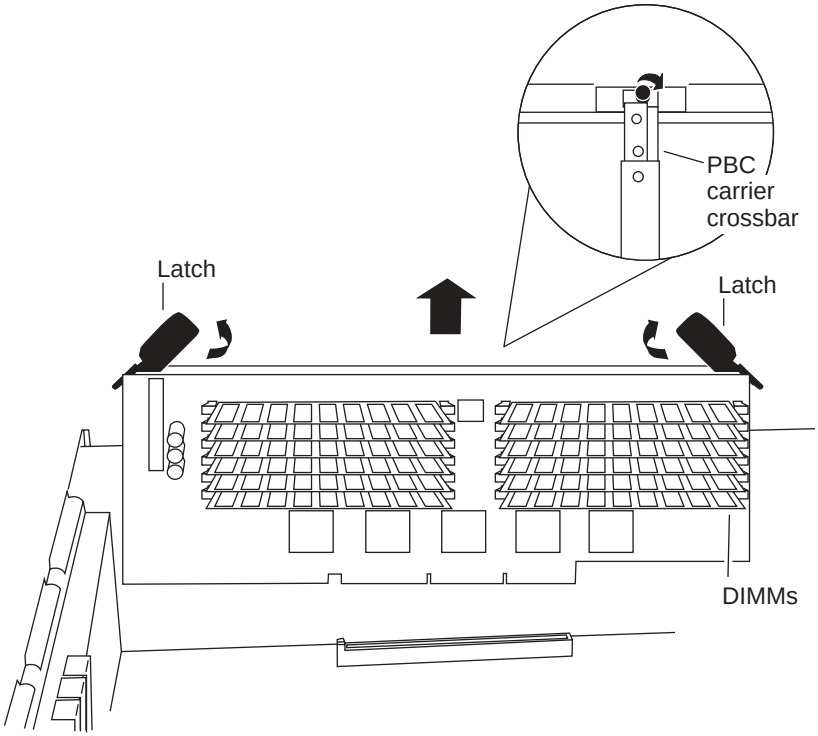

Step	Action
1	Open the PCB carrier. Follow the procedure in "Opening the PCB carrier" on page 65.
2	Lift the PCB carrier crossbar from the top of the inside of the PCB carrier by loosening the thumbscrew above the memory card assembly.
3	Pull apart the latches on both sides of the memory card assembly to release it from the PCB carrier.
4	Carefully pull the memory card assembly from its riser slot.
5	Set the memory card assembly aside in an antistatic bag.

Installing the memory card assembly

To install the memory card assembly, complete the following steps.

Step	Action
1	Hold the memory card assembly by the sides to avoid damaging the components.
2	Carefully insert the memory card assembly straight into its riser slot. The memory card assembly fits tightly in the slot, but should go in easily. If not, realign the memory card assembly with its riser slot and try again. **Caution** Visually inspect the memory card assembly to verify that it is evenly aligned and fully inserted into the slot; otherwise, the edge connector on the memory card assembly does not make complete contact with the slot.
3	Push carefully, but firmly on the top edge of the memory card assembly until the latches snap into place.
4	Lower the PCB carrier crossbar and secure it on top of the memory card assembly by tightening the thumbscrew.

Step	Action
5	Go to “Closing the PCB carrier” on page 85.
6	After turning on the storage engine, run diagnostics on your new memory card assembly. See the *Diagnostics Guide* for more information.

Replacing SDRAM DIMMs on the memory card assembly

About replacing SDRAM DIMMs

This section provides the supported memory configurations for your storage engine and describes the procedures for replacing the SDRAM DIMMs on the memory card assembly.

Replacing the SDRAM DIMMs on the memory card consists of the following procedures:

- "Removing an SDRAM DIMM" on page 78
- "Installing an SDRAM DIMM" on page 80

Required memory configurations

The following table lists the supported memory configuration for the memory card in the storage engine.

Note

SDRAM DIMMs are numbered to the right and the left of the DIMM slots on the memory card. The DIMM group numbers appear in smaller print perpendicular to the DIMM slots.

DIMM slots	DIMM group numbers	Requires memory configuration
1-4	Group 1	3.3V, registered, 8 x 512 MB SDRAM DIMMS
4-8	Group 2	

Caution

All DIMMs must be listed on the Network Appliance Approved Parts List. Contact Network Appliance Sales to obtain this list. Unapproved DIMMs have not been tested for reliability and might cause system downtime.

DIMM locations

Use the following illustration to determine the location of DIMM slots and DIMM group numbers.

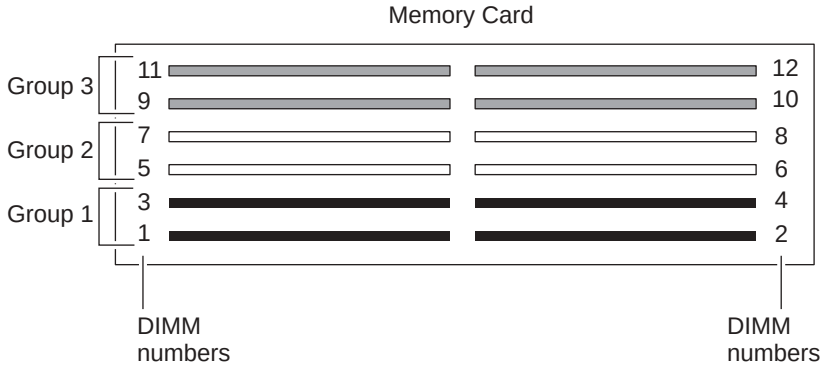

Removing an SDRAM DIMM

To remove an SDRAM DIMM, complete the following steps.

Step	Action
1	Open the PCB carrier. Follow the procedure in "Opening the PCB carrier" on page 65.
2	Remove the memory card assembly, as described in "Removing the memory card assembly" on page 74.
3	Locate the DIMM that you want to remove.

Step	Action
4	Push apart the latches on either side of the DIMM to release the DIMM from its slot, as shown. 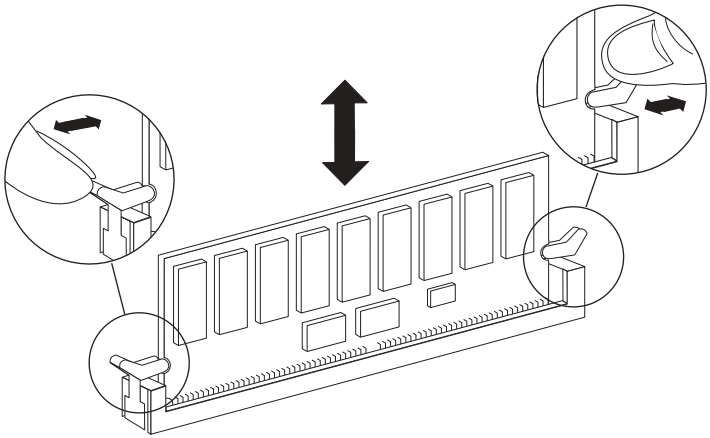
5	Pull the DIMM out of the slot.
6	Set the DIMM aside in an antistatic bag.

Installing an SDRAM DIMM

To install an SDRAM DIMM, complete the following steps.

Step	Action
1	Locate the DIMM slot for the DIMM you are installing.
2	Hold the DIMM by its top corners to avoid damaging the components.
3	Insert the DIMM straight into the slot. The DIMM fits tightly in the slot, but should go in easily. If not, realign the DIMM with the slot and try again. **Caution** Visually inspect the DIMM to verify that it is evenly aligned and fully inserted into the slot; otherwise, the edge connector on the DIMM does not make complete contact with the slot.
4	Push carefully but firmly on the top edge of the DIMM until the latches snap into place.
5	Install the memory card assembly, as described in "Installing the memory card assembly" on page 75.
6	Go to "Closing the PCB carrier" on page 85.
7	After turning on your system, run diagnostics on the SDRAM DIMMs. See the *Diagnostics Guide* for more information.

Installing or replacing expansion adapters

About installing or replacing expansion adapters

Replacing an expansion adapter or installing a new expansion adapter consists of one or both of the following procedures:

- "Removing an existing expansion adapter" on page 82
- "Installing an expansion adapter" on page 84

Expansion adapters used

The storage engine uses the following expansion adapters:

- NVRAM4 adapter
- FC-AL adapter for disk storage
- Network interface cards
- Tape adapters:
  - SCSI
  - FC-AL

Slot assignments for expansion adapters

If you are adding expansion adapters to your storage engine, the System Configuration Guide at http://now.netapp.com provides current configuration information for the following:

- Expansion slots that are available on your storage engine
- Supported adapters
- Expansion slot assignments

Caution

Install only supported expansion adapters in the assigned expansion slots. To ensure compatibility, performance, and reliability, you must obtain expansion adapters for your storage engine from Network Appliance or an authorized reseller.

Removing an existing expansion adapter

To remove existing expansion adapters, complete the following steps.

Step	Action	
1	Open the PCB carrier. Follow the procedure in "Opening the PCB carrier" on page 65.	
2	Unlatch the PCI clamp arm and pull it aside. **Note** Your system might require that you screw down PCI expansion adapters. If so, remove and set aside any screws for PCI expansion adapters.	
3	Note which cables (if any) are connected to the connectors on the faceplate of the expansion adapter before disconnecting the cables.	
4	**If you are replacing…**	**Then…**
	The NVRAM4 adapter	Remove the PCB carrier crossbar by loosening the thumbscrew and lifting the crossbar away from the top of the PCB carrier. **Caution** If you did not perform a clean shutdown using the `halt` command, disconnecting the NVRAM battery from the NVRAM4 adapter results in data loss.
	Any other PCI adapter	Go to Step 5.
5	Remove the PCI clamp-down bracket holding the expansion adapter faceplate to the back panel bracket and save it for reinstalling the adapter.	

Step	Action	
6	Pull upward on the top edge of the expansion adapter and lift it out of the chassis, as shown. 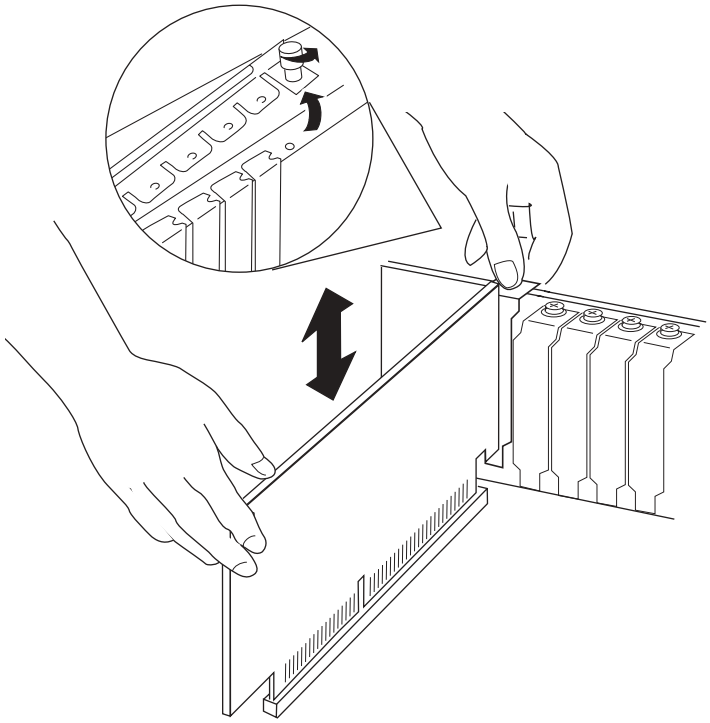	
7	**If you are…**	**Then…**
	Not installing a replacement expansion adapter	Install a slot cover for the empty PCI slot.
	Installing a replacement expansion adapter	Go to "Installing an expansion adapter" on page 84.

Installing an expansion adapter

To install an expansion adapter, complete the following steps.

Step	Action	
1	**If you are…**	**Then…**
	Installing a new adapter	Take the adapter out of the antistatic bag and discard the bag.
	Installing a replacement adapter	Take the replacement adapter out of the antistatic bag and place the used adapter into that bag.
2	Holding the adapter by its top edge, with the faceplate near the back of the machine, lower the adapter into the slot until its connector edge meets the grooves in the expansion slot. The faceplate of the adapter should be in position against the back panel, and should cover the endplate slot on the back panel.	
3	Press carefully on the top edge of the adapter until the edge connector is seated in the expansion slot.	
4	If applicable, replace the faceplate screw to secure the adapter to the back panel.	
5	Reconnect the cables to the external connectors on the replacement expansion adapter.	
6	**If you are…**	**Then…**
	Replacing the NVRAM4	Lock down the PCB carrier crossbar over the NVRAM4, and then secure the crossbar to the side of the PCB carrier by tightening the thumbscrew.
	Replacing a an adapter other the NVRAM4	Go to Step 7.
7	Go to “Closing the PCB carrier” on page 85	
8	After turning on the storage engine, run diagnostics on the expansion adapter you replaced. See the *Diagnostics Guide* for more information.	

Closing the PCB carrier

Closing the PCB carrier

To close the PCB carrier, complete the following steps.

Step	Action
1	If you removed the PCB carrier, screw in the carrier rails on each side, and then carefully place the carrier on the extended slides of the storage engine chassis so that the tabs on the rails fit into the slots on the slides.
2	Using the cam handle, slide the PCB carrier into your appliance chassis. If the PCB carrier is locked in position, press inward on the carrier tabs on each carrier slide rail while pushing the PCB carrier into the chassis.
3	Tighten the three thumbscrews on the back of the chassis.
4	Reconnect any cables you removed from the back panel of the storage engine.
5	Reconnect the power to the storage engine, and if applicable, your disk shelves.
6	Turn on your disk shelves, your tape backup devices, and Fibre Channel switches if applicable, and then the storage engine.
7	Interrupt the boot process by pressing the Delete key during the memory test.
8	Run diagnostics by entering the following command at the `ok>` prompt: **`sys-diag`** See the *Diagnostics Guide* for more information.
9	Run the specific diagnostics that apply to the unit you installed or replaced.

Replacing fan subassemblies

About replacing fan subassemblies

Replacing a fan subassembly consists of the following procedures:

- "Removing a fan subassembly" on page 87
- "Installing a fan subassembly" on page 89

Identifying the subassembly to replace

Each of the three fan subassemblies secured to the front of the storage engine chassis contains two fans. If a problem occurs in a fan, the system console displays an error message identifying the specific fan that has the problem, rather than the subassembly it belongs to.

Note

You cannot replace the individual fan; you must replace the subassembly.

The following table lists the individual fan numbers that the console might display and their corresponding subassemblies.

Fan number (as indicated on your console)	**Subassembly (as indicated on your chassis)**
Baseboard fan 1	Subassembly 1
Baseboard fan 2	
Baseboard fan 3	Subassembly 2
Baseboard fan 4	
Baseboard fan 5	Subassembly 3
Baseboard fan 6	

Note

To maintain UL, CSA, and TUV safety certifications, you must obtain replacement fan subassemblies from Network Appliance. Using unapproved replacement fan subassemblies voids the safety certifications.

Removing a fan subassembly

To remove a fan subassembly, complete the following steps.

Note

Because the three subassemblies are hot swappable, there is no need to shut down the storage engine. There is a two-minute window for replacing fans.

Step	Action
1	From the console, note the identification of the fan that failed and identify the subassembly that it belongs to.
2	Pull the bezel straight off the front of your appliance by using the grooves on the left and right edges of the bezel. 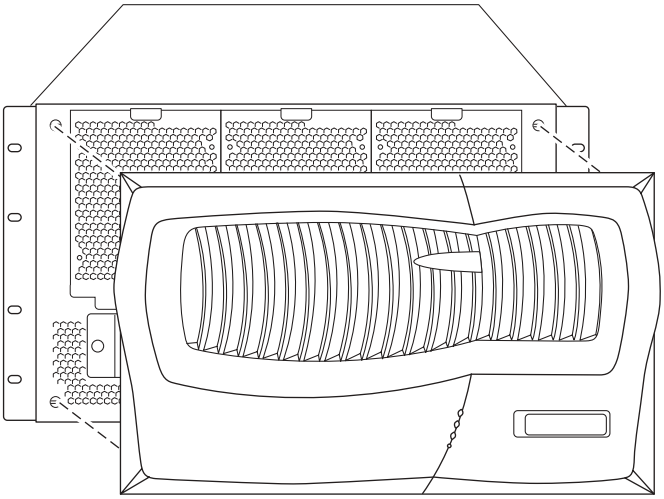
3	Using a #1 Phillips screwdriver, loosen the thumbscrews on the chassis fan subassembly that failed.

Step	Action
4	Using both the upper and lower lips, pull the subassembly out of the storage engine chassis. The sheet metal below the subassemblies is silk-screened with the labels Fan 1, Fan 2, and Fan 3. **Note** If your appliance is running Data ONTAP™ software, it reports a failure for the removed fan subassembly. 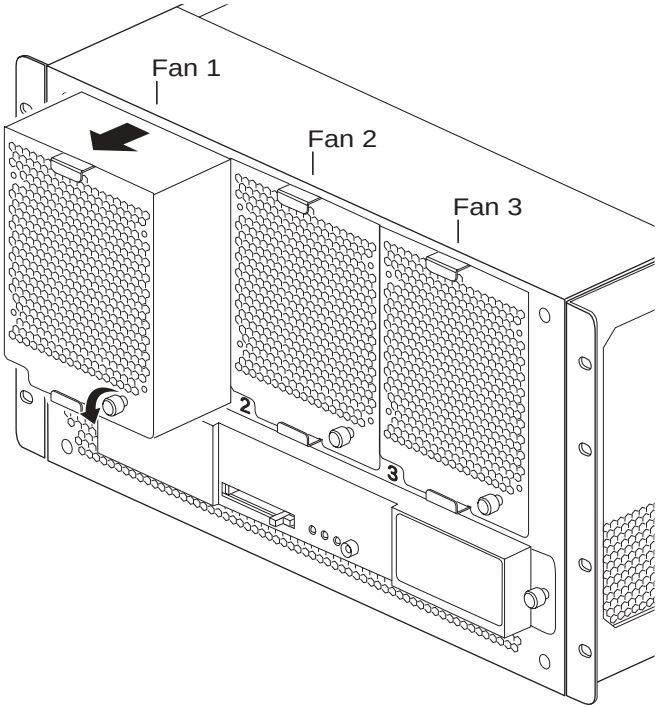
5	Set the subassembly aside.

Installing a fan subassembly

To install a fan subassembly, complete the following steps.

Step	Action
1	Slide the subassembly straight into the storage engine chassis.
2	Tighten the subassembly thumbscrews.
3	Align the pins on the bezel with the holes on the front of the storage engine, and then push the bezel straight onto it.
4	Reconnect and turn on the power to the storage engine.
5	Interrupt the boot process by pressing the Delete key during the memory test.
6	Run diagnostics by entering the following command at the `ok>` prompt: **`sys-diag`** See the *Diagnostics Guide* for more information.
7	Run the diagnostics that apply to the unit you installed or replaced.

Replacing the power supplies

About replacing a power supply

Your storage engine has two power supplies in two separate power supply bays at the back.

Note

Because you have two power supplies that are hot swappable, you do not have to shut down the storage engine when you are replacing only one of them.

Replacing a power supply consists of the following procedures:

- "Removing a power supply" on page 91
- "Installing a power supply" on page 92

Power supply compatibility

Be aware of the following caution regarding the compatibility between the two power supplies in your appliance.

Caution

When replacing a power supply, be sure not to mix power supplies from different systems. The two power supplies in your appliance must have the same part number.

Removing a power supply

To remove a power supply, complete the following steps, using the figure for reference.

WARNING

To avoid an electric shock hazard, you must disconnect the power supply before removing it from the storage engine.

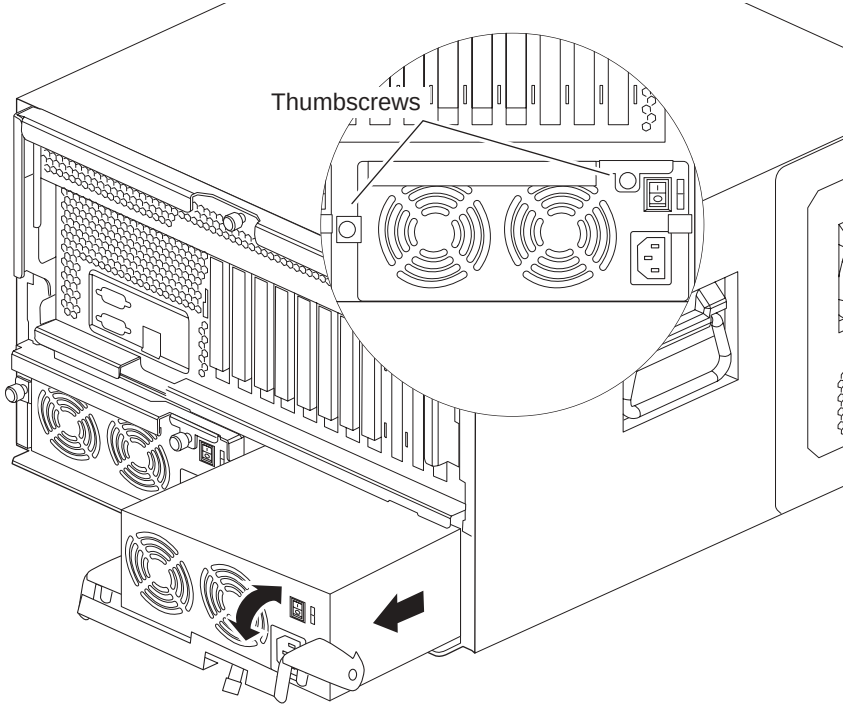

Step	Action
1	From the console or LCD screen, identify the failed power supply. **Note** The power supply identifiers, PS1 and PS2, are silk-screened onto the storage engine chassis.
2	Put on the antistatic wrist strap and grounding leash.
3	Turn off the switch on the power supply that you are replacing.

Step	Action
4	Lift up the clip lock and unplug the power cord from the storage engine power supply.
5	Loosen the power supply thumbscrews by turning each thumbscrew counterclockwise.
6	Use the cam handle to slide the power supply out of the power supply bay. **WARNING** **The power supply is heavy. Support the bottom of the unit while removing the unit from its bay.**
7	Set the power supply aside. **Note** If the storage engine is running Data ONTAP, it reports a failure for the removed power supply.

Installing a power supply

To install a power supply, complete the following steps.

Step	Action
1	Verify that the switch on the power supply is turned off.
2	Slowly and firmly push the power supply into the bay until the power supply is firmly seated in the bay.
3	Secure the power supply by turning the thumbscrew clockwise until it stops.

Step	Action
4	Plug the power cord into the power cord receptacle on the power supply and secure it with the adjustable clip lock, shown below. 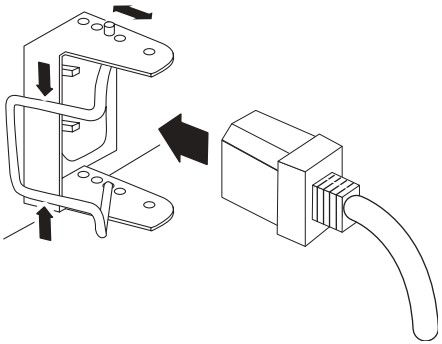
5	Turn on the power to the new power supply.

Replacing the control panel subassembly

About replacing the control panel subassembly

The control panel assembly includes your CompactFlash unit. Replacing the control panel subassembly consists of the following procedures:

- "Removing the control panel subassembly" on page 94
- "Installing the control panel subassembly" on page 96

Removing the control panel subassembly

To remove the control panel subassembly, complete the following steps.

Step	Action
1	Shut down the storage engine by entering the following command at the console: **`halt`** **Caution** Always use the `halt` command to perform a clean shutdown of your appliance. If you do not perform a clean shutdown before removing the CompactFlash unit, your system panics.
2	Turn off and disconnect the power to the storage engine.
3	Put on the antistatic wrist strap and attach the grounding leash to the storage engine chassis.

Step	Action
4	Remove the CompactFlash card by pulling the lever on the side of the CompactFlash bay and pushing to release the card. 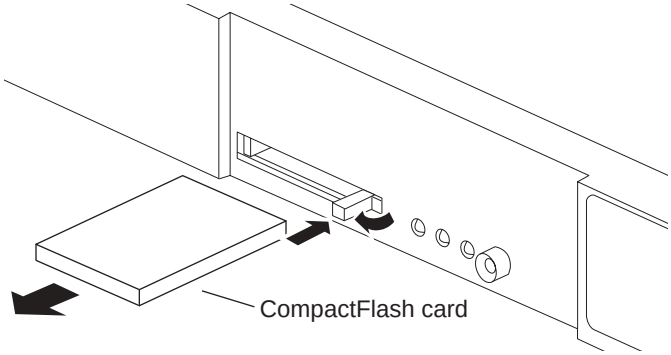
5	Pull the control panel subassembly out of the drive bay. 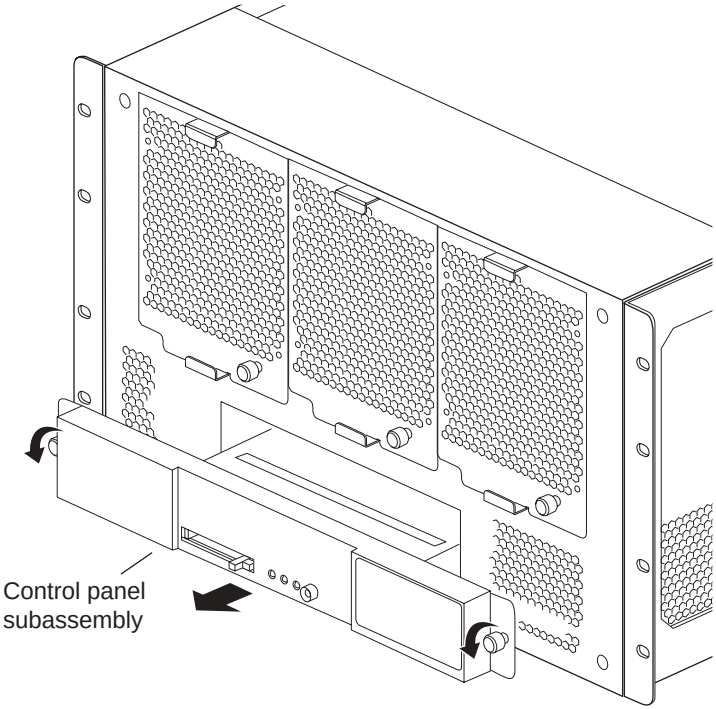

Installing the control panel subassembly

To install the control panel subassembly, complete the following steps.

Step	Action
1	Slide the control panel subassembly into the drive bay.
2	Tighten the two thumbscrews to secure the control panel subassembly to the chassis.
3	Slide the CompactFlash card into the slot on the front of the CompactFlash reader.
4	Reinstall the front bezel by aligning the pins on the bezel with the holes on the front of the storage engine, and then pushing the bezel straight onto it.
5	Reconnect and turn on the power to the storage engine.
6	Interrupt the boot process by pressing the Delete key during the memory test. **Note** If Delete doesn't interrupt booting, try using Ctrl-Backspace.
7	Insert the CompactFlash unit and run diagnostics by entering the following command at the `ok>` prompt: **`sys-diag`** See the *Diagnostics Guide* for more information about specific diagnostic tests.
8	Exit diagnostics to return to the `ok>` prompt.
9	Boot the system by entering the following command: **`boot`**

Error Messages and Troubleshooting 6

About this chapter

This chapter lists error messages you might encounter during the boot process. It also describes the location of the LEDs and how to interpret the information they provide.

Note

If you contact Network Appliance Technical Support for service, report both the LCD message and the console message. Most LCD messages are truncated versions of console messages that provide more information about the error condition than the LCD messages.

Topics in this chapter

This chapter describes the following topics:

- "Startup error messages" on page 98
- "Operational error messages" on page 108
- "Troubleshooting system boot problems" on page 114

Where to get more information

The following table lists the documentation that can help you with some of the corrective actions.

If you are troubleshooting…	Then…
Storage engine hardware problems and need to open the storage engine	See Chapter 5, "Replacing Storage Engine Components," on page 63.
Disk shelf problems	See Chapter 4, "Replacing Disk Shelf Components," on page 51.
Software problems	See the *Data ONTAP System Administration* guides.

Startup error messages

Startup sequence

When you apply power to the storage engine, it verifies the hardware that is in the system, loads the operating system, and displays either normal startup messages or error messages on the system console. The error messages are divided into two types of messages:

- Power-On Self-Test (POST) messages
- Boot messages

For detailed information

For a detailed list of the startup error messages, see the following sections:

- "POST error messages" on page 99
- "Boot error messages" on page 104

POST error messages

POST error messages

The following table describes the extended POST error messages that might appear on the system console if your storage engine encounters CPU-level system errors during the POST process.

If any Processor 2 error messages are displayed, power cycle the system. If the error message persists, replace the motherboard, as described in "Replacing the motherboard" on page 69.

Note

Always power cycle your storage engine when you receive any of the following errors. If the system repeats the error message, follow the corrective action for that error message.

Error message or code	Description	Corrective action
*BMC disable	Not supported.	Contact Network Appliance Customer Support for instructions.
*Watchdog error	An error occurred during the testing of the Watchdog timer.	Replace the motherboard, as described in "Replacing the motherboard" on page 69.
*Missing CF-card	The CompactFlash card is missing from the front of the machine. The kernel does not boot correctly.	Insert a valid CompactFlash card or replace the control panel subassembly, as described in "Replacing the control panel subassembly" on page 94
*Inv boot device	An error with the CompactFlash card occurred. This is usually caused by a card made by an unsupported manufacturer.	Insert a valid CompactFlash card.
*Boot device err	A CompactFlash card could not be found to boot from.	Insert a valid CompactFlash card.

Error message or code	Description	Corrective action
**2.5V power bad* **3.3V power bad* **5V power bad* **+12V power bad* **-12V power bad*	One (or more) of the power voltages is bad. This could be due to a bad power supply or power-regulation device.	Replace the motherboard, as described in "Replacing the motherboard" on page 69, or replace the memory card assembly, as described in "Replacing the memory card assembly" on page 74.
*Pwr Sup #1 bad	An error occurred within the power supply.	Replace the power supply, as described in "Replacing the power supplies" on page 90.
*Pwr Sup #2 bad	An error occurred within the power supply.	Replace the power supply, as described in "Replacing the power supplies" on page 90.
*Pwr Sup #1 out	The power supply is not connected to the storage engine chassis.	Replace the power supply, as described in "Replacing the power supplies" on page 90.
*Pwr Sup #2 out	The power supply is not connected to the storage engine chassis.	Replace the power supply, as described in "Replacing the power supplies" on page 90.
**Boot DeviceErr*	The CompactFlash card could not be found to boot from.	Insert a CompactFlash card.
**Clock invalid. Date reset*	The system real-time clock (RTC) contains an invalid date value. The system does not boot, but the date is reset to January 1, 1970, to enable a subsequent boot.	Replace your motherboard battery and reset the date immediately to avoid file system problems.
**Clock dead*	The system RTC failed.	Replace the motherboard tray.
**Clock batt dead*	The system RTC failed and its battery expired.	Replace the failed motherboard battery, and reset the date immediately to avoid file system problems.
**Clock error*	The system real-time clock (RTC) is not operating (counting) correctly.	Replace the motherboard.

Error message or code	Description	Corrective action
**Clock reset*	The system RTC is not running. The system does not boot, but the date is reset to January 1, 1970, to enable a subsequent boot.	Reboot your storage engine and reset the date immediately to avoid file system problems.
**CPU ucode err*	The CPU microcode update did not occur or, in a multiprocessor system, the microcode updates in the CPUs do not match; that is, they have different revisions.	Update the firmware to a version that contains an updated microcode database.
**CPU speed err*	The CPU's measured clock speed does not match the expected value for the storage engine model. This indicates problems with system clocks and/or buses.	Update the firmware to a version that contains an updated microcode database, or replace the motherboard, as described in "Replacing the motherboard" on page 69.
**CPU count err*	The number of CPUs found by the firmware does not correspond to the expected number based on the system model.	Reboot your storage engine. If the problem persists, replace the motherboard.
**FP button stuck*	The front panel Interrupt button is stuck.	**1.** Free the Interrupt button. **2.** Replace the LED/LCD subassembly. **3.** Replace the motherboard.
**LCD won't open* **LCD cmd stall* **LCD cursor err* **LCD data error*	The system LCD device is not operating correctly. All subsequent POST messages are displayed on the console.	Replace the control panel assembly.
**Env-A rupt err* **Env-B rupt err* **Env-C rupt err* **Env-D rupt err*	One of four environmental status monitors on your storage engine cannot interrupt the processor, which prevents your storage engine from properly monitoring its environmental health.	Replace the motherboard, as described in "Replacing the motherboard" on page 69.

Error message or code	Description	Corrective action
**Env-A stat err* **Env-B stat err* **Env-C stat err* **Env-D stat err*	One of four environmental status monitors on your storage engine indicates that it cannot properly monitor its environmental health.	Replace the motherboard, as described in "Replacing the motherboard" on page 69.
**No power info*	The system is clearly running but no information about the power supply is being reported. Something is wrong with the power supply or the status reporting circuitry.	Replace the power supply or the motherboard.
**Onboard battery low*	The lithium battery on the motherboard is low.	Replace the lithium battery on the motherboard, as described in "Replacing the motherboard lithium battery" on page 72.
**Overtemp alert*	The internal temperature sensor detected a dangerously high temperature that can damage the system components inside the chassis.	**1.** Power down your storage engine. **2.** Reduce the ambient temperature to 40° C or lower. **3.** Make sure that you have proper air circulation through your storage engine. If the temperature inside your storage engine is not excessively hot, the sensor itself might have failed. **4.** Replace the motherboard.
**PCCRD init fail* **PCCRD reg error* **PCCRD seek err* **PCCRD track err* **PCCRD head err* **PCCRD format err* **PCCRD read err* **PCCRD setup err*	These messages indicate that the control panel assembly failed.	Replace the CompactFlash card, the control panel assembly, or the motherboard.

Error message or code	Description	Corrective action
**SIO error*	Your storage engine SIO or ISA bridge chip failed its timer interrupt test. The system cannot operate properly without this function.	Replace the motherboard.
**Watchdog failed*	Your storage engine watchdog reset hardware, used to reset your storage engine from a system hang condition, is not functioning properly.	Replace the motherboard.
**Fan(s) failed*	A fan in your storage engine stopped and should be replaced as soon as possible. The system console displays information about which fan stopped.	Replace the fan, as described in "Replacing fan subassemblies" on page 86.
**Unknown System*	The system information in the backplane is incorrect.	Replace your storage engine.
**Post error. Rebooting...*	Not supported.	Contact Network Appliance Customer Support for instructions.

Boot error messages

When boot error messages appear

Boot error messages might appear after the hardware passes all POSTs and your storage engine begins to load the operating system.

Boot error messages

The following table describes the error messages that might appear on the LCD if your storage engine encounters errors while starting up.

Boot error message	Explanation	Corrective action
No /etc/rc	The /etc/rc file is corrupted.	**1.** At the **`hostname`**> prompt, enter **`setup`**. **2.** As the system prompts for system configuration information, use the information you recorded in your storage engine configuration information worksheet in the *Getting Started Guide*. For more information about your storage engine setup program, see the *System Administration Guide*.
No /etc/rc, running setup	The system cannot find the /etc/rc file and automatically starts `setup`.	As the system prompts for system configuration information, use the information you recorded in your storage engine configuration information worksheet in the *Getting Started Guide*. For more information about your storage engine setup program, see the *System Administration Guide*.

Boot error message	Explanation	Corrective action
Cannot initialize labels	When the system tries to create a new file system, it cannot initialize the disk labels.	Usually, you do not need to create and initialize a file system; do so only after consulting Network Appliance Customer Support.
Cannot read labels	When your storage engine tries to initialize a new file system, it has a problem reading the disk labels it wrote to the disks. This problem can be because the system failed to read the disk size, or the written disk labels were invalid.	Usually, you do not need to create and initialize a file system; do so only after consulting Network Appliance Customer Support.
Disk label processing failed	Your storage engine detects that the disk is not in the correct drive bay.	Make sure that the disk is in the correct bay.
Dirty shutdown in degraded mode	The file system is inconsistent because you did not shut down the system cleanly when it was in degraded mode.	Contact Network Appliance Customer Support for instructions about repairing the file system.
Halted: firmware too old	Not supported.	Contact Network Appliance Customer Support.
No disks	The system cannot detect any disks.	Verify that all disks are properly seated in the drive bays.
No disk controllers	The system cannot detect any disk controllers.	Turn off your storage engine power and verify that all NICs are properly seated in the appropriate expansion slots.
Drive %s.%d not supported	*%s*—The disk number; *%d*—The disk ID number. The system detects an unsupported disk drive.	**1.** Remove the drive immediately or the system drops down to the PROM monitor within 30 seconds. **2.** Check the System Configuration Guide at http://now.netapp.com to verify support for your disk drive.

Boot error message	Explanation	Corrective action
FC-AL loop down, adapter %d	The system cannot detect the FC-AL loop or adapter.	**1.** Identify the adapter by entering the following command: `storage show adapter` **2.** Turn off the power on your storage engine and verify that the adapter is properly seated in the expansion slot. **3.** Verify that all Fibre Channel cables are connected.
Halted: Illegal configuration	Incorrect cluster configuration.	R200 does not support clustering.
File system may be scrambled	One of the following errors causes the file system to be inconsistent:	
	◆ An unclean shutdown when your storage engine is in degraded mode and when NVRAM is not working.	Contact Network Appliance Customer Support to learn how to start the system from a system boot diskette and repair the file system.
	◆ The number of disks detected in the disk array is different from the number of disks recorded in the disk labels. The system cannot start when more than one disk is missing.	Make sure that all disks on the system are properly installed in the disk shelves.
	◆ The system encounters a read error while reconstructing parity.	Contact Network Appliance Customer Support for help.
	◆ A disk failed at the same time the system crashed.	Contact Network Appliance Customer Support to learn how to repair the file system.
Invalid PCI card slot %d	*%d*—The expansion slot number. The system detects a adapter that is not supported by Network Appliance.	Replace the unsupported adapter with an adapter that is included in the System Configuration Guide at http://now.netapp.com.

Boot error message	Explanation	Corrective action
Configuration exceeds max PCI space	The memory space for mapping PCI adapters is exhausted, because either ◆ There are too many PCI adapters in the system ◆ An adapter is demanding too many resources	Verify that all expansion adapters in your storage engine are supported. Contact Network Appliance Customer Support for help. Have a list ready of all expansion adapters installed in your storage engine.
No network interfaces	The system cannot detect any network interfaces.	**1.** Turn off the system and verify that all NICs are seated properly in the appropriate expansion slots. **2.** Run diagnostics to check the onboard Ethernet port. If the problem persists, contact Network Appliance Customer Support.
No NVRAM present	*n*—The serial number of the NVRAM adapter. The NVRAM adapter is an early revision that cannot be used with the system.	Check the console for information about which revision of the NVRAM adapter is required. Replace the NVRAM adapter.
NVRAM #n downrev	*%d*—The amount of memory on the NVRAM adapter. The specified size is not supported.	Verify that the system has 256 MB of NVRAM.

Operational error messages

When operational error messages appear

These error messages might appear on the system console or LCD when the system is operating, when it is halted, or when it is restarting because of system problems.

General error messages

The following table describes other error messages that might appear on the LCD if your storage engine encounters errors while starting up or during operation.

Error message	Explanation	Fatal?	Corrective action
Disk n is broken	*n*—The RAID group disk number. The solution depends on whether you have a hot spare in the system.	No	See the *System Administration Guide* for information about how to locate a disk based on the RAID group disk number and how to replace a faulty disk.
Fans stopped; replace them	One of the fan subassemblies of your storage engine failed.	No	Replace the failed fan subassembly as soon as possible.
Power supply degraded	One of the power supply units is turned off, was removed from your storage engine, or failed.	No	Verify that both power supplies are installed and turned on. If you still get this error, replace the power supplies one at a time to determine the failed power supply.
Dumping core	The system is dumping core after a system crash.	Yes	Write down the system crash message on the system console and report the problem to Network Appliance Customer Support.

Error message	Explanation	Fatal?	Corrective action
Disk hung during swap	A disk error occurred as you were hot swapping a disk.	Yes	**1.** Disconnect the disk from the power supply by opening the latch and pulling it half-way out. **2.** Wait 15 seconds to allow all disks to spin down. **3.** Reinstall the disk. **4.** Restart the system by entering the following command: `boot`
Error dumping core	The system cannot dump core during a system crash and restarts without dumping core.	Yes	Report the problem to Network Appliance Customer Support.
Panicking	The system is crashing. If the system does not hang while crashing, the message `Dumping core` appears.	Yes	Report the problem to Network Appliance Customer Support.
System too hot	The temperature sensor indicates that the system temperature is too high.	Yes	Verify that the ventilation holes on the top cover of the system are not blocked. If the ventilation holes are not blocked and the problem persists, contact Network Appliance Customer Support for help.

AT-FC error messages

The following table describes other error messages that might appear on the console if your storage engine encounters AT-FC module errors while starting up or during operation. The output displayed on the console is similar to the following example.

Example:

```
Wed Aug  6 19:31:40 PDT [scsi.cmd.notReadyCondition:notice]: Device
11b.44: Device returns not yet ready: CDB 0x41:026d0880:5000: Sense
Data SCSI:not ready -  (0x2 - 0x4 0x7 0x0)(28615).
```

Sense key	ASC	ASCQ	Description on console	Corrective action
00h	00h	00h	No sense	No action.
01h	5Dh	20h	Recovered error, controller impending error, general hard drive failure, SMART notification.	Notification was sent out and follow-on log messages identify and clarify corrective action.
02h	04h	00h	Not ready, cause not reportable (drive failed to spin-up and become ready).	No action.
02h	04h	01h	Not ready, logical unit is in the process of becoming ready (drive spinning up).	
02h	04h	03h	Logical unit not ready, manual intervention required (drive failed to become ready after error recovery or drive not installed).	Replace or install a disk drive in the identified location, as described in "Replacing a disk in a disk shelf" on page 53.
02h	04h	07h	Logical unit not ready, command in progress (drive command timeout).	No action.
03h	11h	00h	Media error, unrecoverable read error (ATA UNC).	
03h	12h	00h	Media error, address mark not found for ID (ATA AMNF, drive vendor unique)	
03h	14h	01h	Medium error, record not found. (ATA IDNF)	

Sense key	ASC	ASCQ	Description on console	Corrective action
03h	15h	01h	Medium error, mechanical positioning error (ATA TRK0 NF, drive vendor unique).	No action.
04h	44h	00h	Hardware error, internal target failure (ATA FW PROB, drive vendor unique or unrecognized ATA error).	
05h	20h	00h	Illegal request, invalid command Op Code.	
05h	21h	00h	Illegal request, logical block address out of range.	
05h	24h	00h	Illegal request, invalid field in CDB.	
05h	26h	00h	Illegal request, invalid field in parameter list.	
06h	29h	00h	Unit attention, reset or target reset occurred.	
06h	29h	01h	Unit attention, power-on occurred.	
06h	3Fh	03h	Unit attention, inquiry data changed.	
0Bh	08h	03h	Hardware error, logical unit communication error (ATA ICRC).	Check the connections to ensure that they are secure and tight. If the error persists, change the cables.
0Bh	44h	00h	Aborted command, internal target failure (ATA ABRT).	No action.

Additional AT-FC error messages

The following error messages appear on the storage appliance console if an SES element on the AT-FC module fails. See "Replacing the AT-FC module" on page 59 for more information. The output displayed on the console is similar to the following example.

Example:

```
Mon Aug 25 21:34:05 GMT [ses.status.temperatureWarning:warning]:
DS14-Mk2-AT shelf 3 on channel 5a temperature warning for
Temperature sensor 1: non-critical status; undertemperature
warning. Current temperature: 1 C (33 F). This module is on the
front side of the shelf, at the right, on the OPS panel.
```

Error message	Corrective action
`Temperature sensor 2: failed`	Contact Network Appliance Customer Support.
`Temperature sensor 3: failed`	
`SES electronics Element 1: component is from a different product family`	This configuration is unsupported. Contact Network Appliance Customer Support.
`SES electronics Element 1: failed`	Contact Network Appliance Customer Support.
`SES electronics Element 2: failed`	The AT-FC module on the disk shelf failed. Replace the AT-FC module, as described in "Replacing the AT-FC module" on page 59.
`Temperature sensor 2: not installed or failed`	Contact Network Appliance Customer Support.
`Environmental sensor 3: not installed or failed`	Contact Network Appliance Customer Support.
`SES electronics Element 1: not installed or failed`	
`Vendor-specific Element 1: not installed or failed`	
`SES electronics Element 2: not installed or failed`	Communication with the temperature sensor on the AT-FC module failed. Replace the AT-FC module, as described in "Replacing the AT-FC module" on page 59.
`Vendor-specific Element 2: not installed or failed`	

Disk shelf error messages

The following table lists the disk shelf error messages from the front panel and the power supplies, that might be displayed on the console if you encounter disk shelf errors during start or operation.

Error message	Corrective action
Front panel messages	
`Temperature sensor 1: failed`	The temperature sensor on the front operation panel failed. Replace the disk shelf, as described in "Replacing a disk shelf in a rack" on page 52.
`Alarm Element 1: failed`	The alarm on the front operation panel failed. Replace the disk shelf, as described in "Replacing a disk shelf in a rack" on page 52.
`Display Element 1: failed`	The display element on the front operation panel failed. Replace the disk shelves, as described in "Replacing a disk shelf in a rack" on page 52.
Power supply messages	
`Power supply 1: failed`	The power supply on the left back of the disk shelf failed. Replace the power supply, as described in "Replacing a power supply in a disk shelf" on page 56.
`Power supply 2: failed`	The power supply on the right back of the disk shelf failed. Replace the power supply, as described in "Replacing a power supply in a disk shelf" on page 56.
`Cooling element Element 1: failed`	The fan module on the left back power supply failed. Replace the power supply, as described in "Replacing a power supply in a disk shelf" on page 56.
`Cooling element Element 2: failed`	The fan module on the right back power supply failed. Replace the power supply, as described in "Replacing a power supply in a disk shelf" on page 56.

Troubleshooting system boot problems

Troubleshooting system boot problems

Use the steps in the following table to perform basic troubleshooting on your R200 system if it does not boot.

Step	Action
1	Look for a description of the problem on the LCD and console. Follow the instructions, if provided, on the LCD and console.
2	Check all cables and connections, making sure that they are secure.
3	Ensure that power is supplied and is reaching the storage engine. Check the LEDs above the power cords. They should be green.
4	Check the power supplies on the storage engine and disk shelves. If the LEDs on a power supply are not illuminated, remove the power supply and reinstall it, making sure that it connects with the backplane.
5	Power off the storage engine and disk shelves, then power on the disk shelves. See "Storage engine LED responses at startup" on page 36 and "Disk shelf LED responses at startup" on page 45 for a description of the LED responses.
6	Use the onboard diagnostics to check the disks. See the *Diagnostics Guide* for more detailed information.
7	If the storage engine does not boot successfully, it might have a missing or corrupted boot image on the CompactFlash card, or might have a failed CompactFlash card or interface. Call Network Appliance Customer Support at + 1 (888) 4-NETAPP.

Recommended Power Line Sizes A

About this appendix

The information in this appendix helps you to determine the power line lengths running from the system to the power source.

Recommended AC power line sizes

About AC power feeds

Longer AC power feeds must be properly designed to preserve voltage levels to the equipment. The wiring from the breaker panel to the power strip, which supplies power to the R200 storage engine and disk shelves, can often exceed 50 feet.

Note

Total AC wire length = breaker to wall or ceiling outlet + extension cable or ceiling drop.

Recommended conductor size

The following table lists the recommended conductor size for a 2% voltage drop for a particular distance in feet (taken from the *Radio Engineer's Handbook*).

110V, single-phase	**20A circuit**	**30A circuit**	**40A circuit**	**50A circuit**
25 ft	12 AWG	10 AWG	8 AWG	8 AWG
50 ft	8 AWG	6 AWG	6 AWG	4 AWG
75 ft	6 AWG	4 AWG	4 AWG	2 AWG

220V, single-phase	**20A circuit**	**30A circuit**	**40A circuit**	**50A circuit**
25 ft	14 AWG	12 AWG	12 AWG	10 AWG
50 ft	12 AWG	10 AWG	8 AWG	8 AWG
75 ft	10 AWG	8 AWG	6 AWG	6 AWG

Wire gauge approximates

The following table lists the approximate equivalent of American Wire Gauge (AWG) to Harmonized Cordage.

AWG	8	10	12
Harmonized, mm-mm	4.0	2.5	1.5

Communications Regulations B

About this appendix This appendix lists the regulatory notices you need to be aware of when installing and operating your Network Appliance equipment.

Regulatory notices

FCC notices (U.S. only)

Network Appliance devices are designed for a CFR 47 (Code Federal Regulations) Part 15 Class A environment.

The FCC and Network Appliance guarantee the user's rights to operate this equipment only if the user complies with the following rules and regulations:

- Install and operate this equipment in accordance with the specifications and instructions in this guide.
- Modify this equipment only in the ways specified by Network Appliance.
- Use shielded cables with metallic RFI/EMI connector hoods to maintain compliance with applicable emissions standards.
- If the system has nine or more Fibre Channel disk shelves, install the system in two or three NetApp System Cabinets to maintain performance within Part 15 of CFR 47 regulations.

Compliance with Part 15 of CFR 47

This equipment has been tested and found compliant with Part 15 of the CFR 47 rules for Class A digital devices. These rules are designed to provide reasonable protection from interference to electronics equipment operated in a commercial environment.

Operation of this device is subject to the following two conditions:

- This device cannot cause harmful interference.
- This device must accept any interference received, including interference that may cause undesired operation.

Compliance with ICES-003

This Class A digital apparatus complies with Canadian ICES-003.

Cet appareil numérique de la classe A conforme à la norme NMB-003 du Canada.

Compliance with EN regulations

Marking by the symbol CE indicates compliance of this Network Appliance device to the EMC Directive and the Low Voltage Directive of the European Union. Such marking is indicative that this Network Appliance device meets the technical standards listed in "Declaration of Conformity," later in this appendix.

Caution

This is a Class A product. In a domestic environment this product may cause radio interference, in which case the user may be required to take adequate measures.

Bureau of Standards, Metrology, and Inspections notice (BSMI, Taiwan only)

警告使用者:

這是甲類的資訊產品, 在居住的環境中使用時, 可能會造成射頻干擾, 在這種情況下, 使用者會被要求采取某些適當的對策.

Translation of the BSMI notice:

Warning: This is a Class A product. In a domestic environment this product may cause radio interference, in which case the user may be required to take adequate measures.

Voluntary Control Council for Interference by Information Technology Equipment (VCCI, Japan)

この装置は、情報処理装置等電波障害自主規制協議会（ＶＣＣＩ）の基準に基づくクラスＡ情報技術装置です。この装置を家庭環境で使用すると電波妨害を引き起こすことがあります。この場合には使用者が適切な対策を講ずるよう要求されることがあります。

Translation of the VCCI-A notice:

This is a Class A product based on the standard of the Voluntary Control Council for Interference by Information Technology Equipment (VCCI). If this equipment is used in a domestic environment, radio disturbance may arise. If such trouble occurs, the user may be required to take corrective actions.

Declaration of Conformity

Network Appliance, Inc.,
495 East Java Drive
Sunnyvale, California, 94089, U.S.A.,

declare under our sole responsibility that the products

Type of equipment	Description	Model number	Year of manufacture
Network appliance	NetApp R200 storage engine and disk shelves	R200	2003

to which this declaration relates conform to the following standards:

EN 60950:2002, Information Technology Equipment (Safety)

EN 55022:1998, Emissions Requirements for Information Technology Equipment

EN 50024:1998, Immunity Requirements for Information Technology Equipment

EN 60825-1, Safety of Laser/LED Equipment

EN 61000-3-2:2002 Limits for Harmonic Current Emissions

EN 61000-3-3:1995/A1:2001 Limitation of Voltage Fluctuations and Flicker in Low-Voltage Supply Systems

following the provisions of the directives listed below:

73/23/EEC, Low Voltage Directive (Product Safety)

89/336/EEC, Electromagnetic Compatibility Directive

Part number: 210-00351

Index

Numerics

1000Base-SX network
    cabling requirements 21
10Base-T/100Base-TX Ethernet network
    cabling requirements 21
    connecting 22, 23
10Base-T/100Base-TX/1000Base-T Ethernet network
    cabling requirements 21
    connecting 22, 23
-12V power bad 100
12V power bad 100
3.3V power bad 100
5V power bad 100

A

AC power
    connecting to a disk shelf 30
    connecting to the storage engine 32
    recommended power line sizes 116
adapters, expansion 20
AR-FC errors
    SES electronics Element 1 not installed or failed 112
AT-FC
    Aborted command, internal target failure 111
    installing 61
    LEDs 47, 48
    location of the 59
    removing 60
    replacing the 59
AT-FC errors
    Hardware error, internal target failure 111
    Hardware error, logical unit communication error 111
    Illegal request, invalid command Op Code 111
    Illegal request, invalid field in CDB 111
    Illegal request, invalid field in parameter list 111
    Illegal request, logical block address out of range 111
    Logical unit not ready, format in progress 110
    Logical unit not ready, manual intervention required. 110
    Meduim error, address mark not found for ID 110
    Meduim error, mechanical positioning error 111
    Meduim error, record not found 110
    Meduim error, unrecoverable read error 110
    Not ready, cause not reportable (Drive failed to spin-up and become ready). 110
    Not ready, logical unit is in the process of becoming ready (Drive spinning up). 110
    Recovered error, controller impending error, general hard drive failure, SMART notification. 110
    SES electronics Element 1 component is from a different product family 112
    SES electronics Element 1 failed 112
    SES electronics Element 2 failed 112
    Temperature sensor Element 2 failed 112
    Temperature sensor Element 2 not installed or failed 112
    Temperature sensor Element 3 failed 112
    Temperature sensor Element 3 not installed or failed 112
    Unit attention, inquirey data changed 111
    Unit attention, power-on occurred 111
    Unit attention, reset or target reset occurred 111
    Vendor-specific Element 1 not installed or failed 112
    Vendor-specific Element 2 not installed or failed 112
audience vii

B

boot error messages
    Cannot initialize labels 105
    Cannot read labels 105

Configuration exceeds max PCI space 107
Dirty shutdown in degraded mode 105
Disk label processing failed 105
Drive %s.%d not supported 105
FC-AL loop down, adapter %d 106
File system may be scrambled 106
Halted firmware too old 105
Halted illegal configuration 106
Invalid PCI card slot %d 106
No /etc/rc 104
No /etc/rc running setup 104
no disk controllers 105
No disks 105
No network interfaces 107
No NVRAM present 107
NVRAM #n downrev 107

C

cabling requirements
1000Base-SX fiber 21
10Base-T/100Base-TX Ethernet network 21
10Base-T/100Base-TX/1000Base-T Ethernet network 21
connections
Fibre Channel switch 18
SCSI tape backup device 16
system 11
control panel assembly LEDs 37
control panel subassembly, storage engine
installing 96
removing 94
conventions
formatting vii
terminology vii

D

disk shelves
connecting to the storage engine 12
interpreting LEDs on the 46
interpreting LEDs on the back panel 48
LED responses of 45
removal of 52
removing power supplies from 57
disks
installing in a disk shelf 55
removing 54

E

error messages
See boot error messages 104
See operational error messages 108
See POST error messages 99, 110
Ethernet connections supported 21
expansion adapters
Ethernet types 20
FRU listing of 64
installing 84
list of 81
removing 82
replacing 81

F

fans
identifying in the storage engine 87
numbering 86
FC-AL HBA LEDs 39
fiber optic cable with SC connector
on 1000Base-SX networks 21, 26
Fibre Channel switch, connecting 18
formatting conventions vii
front panel LEDs 37
FRUs
See expansion adapters 64

G

GbE network connections
dual-port 25
single-port 24
GbE networks
connecting to 24, 25
NIC LEDs 42

H

hot swappable devices
- disk drive 53
- disk shelf power supply 56
- storage engine power supply 90

I

installation
- about POST messages 49
- AT-FC 61
- disks in a disk shelf 55
- expansion adapter 84
- flush-mount in a two-post rack 9
- memory card assembly 75
- mid-mount in a two-post rack 9
- motherboard lithium battery 73
- motherboard tray 70
- power supplies in the disk shelf 58
- power supplies in the storage engine 92
- rules and restrictions for 4
- SDRAM DIMMs 80
- startup sequence for 49, 98
- storage engine control panel subassembly 96
- storage engine fan subassembly 89

L

LEDs
- back panel of disk shelf 47
- control panel assembly 37
- disk shelf 45
- FC-AL HBA 39
- GbE NIC 42
- storage engine front panel 37

M

maintenance, opening the PCB carrier 65
memory card assembly
- installing 75
- removing 74
- replacing 74

messages
- boot error messages 104
- operational error messages 108

messages, system 97
motherboard lithium battery
- installing 73
- removing 72
- replacing 72

motherboard tray, installing 70
motherboard, replacing 69

N

network connections
- 10Base-T/100Base-TX 22, 23
- Fibre Channel 26
- GbE 24, 25

O

operational error messages
- Disk hung during swap 109
- Disk n is broken 108
- Dumping core 108
- Error dumping core 109
- Fans stopped 108
- Panicking 109
- Power supply degraded 108
- System too hot 109

P

PCB carrier
- closing 85
- opening 65
- removing 67

POST boot messages 49
POST error messages
- 2.5V power bad 100
- boot device err 99
- Boot DeviceErr 100
- Clock batt dead 100
- Clock dead 100
- Clock error 100
- Clock invalid date reset 100
- Clock reset 101

CPU count err 101
CPU speed err 101
CPU ucode err 101
Env-A/B/C/D rupt err 101
Env-A/B/C/D stat err 102
Fan stopped 103
FP button stuck 101
inv boot device 99
LCD cmd stall 101
LCD cursor error 101
LCD data error 101
LCD won’t open 101
missing CF-card 99
No power info 102
Onboard battery low 102
Overtemp alert 102
PCCRD format err 102
PCCRD head err 102
PCCRD init fail 102
PCCRD read err 102
PCCRD regerror 102
PCCRD seek err 102
PCCRD setup err 102
PCCRD track err 102
Post error. Rebooting 103
pwr sup #1 bad 100
pwr sup #1 out 100
pwr sup #2 bad 100
pwr sup #2 out 100
SIO error 103
unknown system 103
watchdog error 99
Watchdog failed 103
power line sizes 116
power on sequence 29
power supplies
connecting AC power to each disk shelf 30
connecting AC power to the storage engine 32
installing in a disk shelf 58
installing in the storage engine 92
power cord with disk shelf 30
removing from a disk shelf 57
removing from storage engine 91
replacing in a disk shelf 56
replacing in a storage engine 90
power to grounded electrical outlet 30

R

R200 disk shelf
installing a disk in 55
installing power supplies in 58
power receptacles for 30
removing a disk from 54
replacing 52
racks
requirements 4
two-post flush-mount 9
two-post midmount 9
recommended AC power line sizes 116
removal of
AT-FC 60
disk shelf 52
disks 54
expansion adapter 82
memory card assembly 74
motherboard lithium battery 72
PCB carrier 67
power supply from a disk shelf 57
SDRAM DIMMs 78
storage engine control panel subassembly 94
storage engine fan subassembly 87
storage engine power supply 91
replacement of
AT-FC 59
disk shelf 52
disk shelf power supply 56
expansion adapters 81
memory card assembly 74
motherboard 69
SDRAM DIMMs 72
requirements
rack 4
tool and equipment 2
responses
See startup responses

RJ-45 connection
dual-port 23
single-port 22

S

SCSI tape backup device, connecting 16
SDRAM DIMMs
installing 80
removing 78
replacing 77
SES electronics Element 2 not installed or failed 112
slide rails
carrier tabs 66, 85
PCB carrier 66
travel distance of 66
special messages viii
startup LED responses 36
storage engines
connecting to an ASCII terminal 27
slot assignments for 20
system boot, troubleshooting 114
system messages
boot 50
POST 50
system startup power on sequence 29

T

tape backup devices
Fibre Channel switch 15
robotic loader 15
termination port on tape device 17
terminology vii
third party devices, connecting to 15
tools and equipment 2
troubleshooting, system booting 114

W

wire gauge approximates 116