DiskShelf14 Hardware Guide

Network Appliance, Inc.
495 East Java Drive
Sunnyvale, CA 94089 USA
Telephone: +1 (408) 822-6000
Fax: +1 (408) 822-4501
Support telephone: +1 (888) 4-NETAPP
Documentation comments: doccomments@netapp.com
Information Web: http://www.netapp.com

Part number 210-00134
August 2002

Copyright and trademark information

Copyright information

Copyright © 1994–2002 Network Appliance, Inc. All rights reserved. Printed in the U.S.A.

No part of this book covered by copyright may be reproduced in any form or by any means—graphic, electronic, or mechanical, including photocopying, recording, taping, or storage in an electronic retrieval system—without prior written permission of the copyright owner.

Network Appliance reserves the right to change any products described herein at any time, and without notice. Network Appliance assumes no responsibility or liability arising from the use of products described herein, except as expressly agreed to in writing by Network Appliance. The use and purchase of this product do not convey a license under any patent rights, trademark rights, or any other intellectual property rights of Network Appliance.

The product described in this manual may be protected by one or more U.S. patents, foreign patents, or pending applications.

RESTRICTED RIGHTS LEGEND: Use, duplication, or disclosure by the government is subject to restrictions as set forth in subparagraph (c)(1)(ii) of the Rights in Technical Data and Computer Software clause at DFARS 252.277-7103 (October 1988) and FAR 52-227-19 (June 1987).

Trademark information

NetApp and the Network Appliance design are registered trademarks of Network Appliance, Inc. in the United States, Canada, and the European Union. Network Appliance is a registered trademark of Network Appliance, Inc. in Monaco and a trademark of Network Appliance, Inc. in the United States and Canada. FAServer is a registered trademark of Network Appliance, Inc. in the United States and the European Union. NetCache is a registered trademark of Network Appliance, Inc. in the European Union and Japan, and a trademark of Network Appliance, Inc. in the United States. SnapCopy is a registered trademark of Network Appliance, Inc. in the European Union and a trademark of Network Appliance, Inc. in the United States. SnapManager is a registered trademark of Network Appliance, Inc. in the United States. WAFL is a registered trademark of Network Appliance, Inc. in the United States, the European Union, and Canada. FilerView and SecureShare are registered trademarks of Network Appliance, Inc. in the United States. Data ONTAP is a trademark of Network Appliance, Inc. in the United States and Canada. Snapshot is a trademark of Network Appliance, Inc. in the United States and the European Union. NetApp–the Network Appliance Company is a registered trademark of Network Appliance, Inc. in the United States and other countries. ApplianceWatch, BareMetal, Center-to-Edge, ContentDirector, DataFabric, MultiStore, NearStore, SecureAdmin, Serving Data by Design, Smart SAN, SnapCache, SnapDrive, SnapMirror, SnapRestore, SnapVault, Vfiler, and Web Filer are trademarks of Network Appliance, Inc. in the United States.

Network Appliance is a licensee of the CompactFlash and CF Logo trademarks.

All other brands or products are trademarks or registered trademarks of their respective holders and should be treated as such.

Table of Contents

Preface v

Safety Information (Sicherheitshinweise) ix

Chapter 1 **Preparing for the Installation**. 1

Preparing your site 2

Required tools and equipment 5

Planning and organizing the installation 6
- Checking shipment contents 7
- Installation rules and restrictions 8
- Guide to the installation process 9

Chapter 2 **Installing a DS14 Disk Shelf** 11

Before you begin your installation 12

Installing a DS14 in a rack 16

Chapter 3 **Connecting a DS14 Disk Shelf** 23

Connecting disk shelves to a storage appliance 24
- Connecting a DS14 to storage appliance 25
- Connecting multiple DS14 disk shelves 29
- Connecting to multiple loops of disk shelves 31

Grounding disk shelves 37

Connecting the disk shelf to a power source 39

Chapter 4 **Monitoring a DS14 Disk Shelf** 41

Monitoring the front operation panel 42

Monitoring the DS14 LRCs 46

Monitoring the DS14 power supply 49

Monitoring the DS14 Fibre Channel disk 51

Chapter 5 **Replacing DS14 Devices** . . . 53

Replacing a disk shelf in a rack . . . 54
Removing a disk shelf from a single disk shelf configuration . . . 55
Removing a disk shelf from a loop . . . 57

Replacing a disk in a disk shelf . . . 59

Replacing a power supply in a disk shelf . . . 62

Replacing an LRC . . . 66
Removing an LRC . . . 67
Installing an LRC . . . 69
Hot-swapping an LRC . . . 70

Appendix A **Adding a Disk Shelf to an Existing System** . . . 73

Installing a DS14 disk shelf in an existing mixed shelf loop . . . 74

Hot-adding a DS14 to an existing loop . . . 79

Appendix B **Recommended Power Line Sizes** . . . 83

Recommended AC power line sizes . . . 84

Calculating the length of DC wires . . . 85

Appendix C **Communications Regulations** . . . 91

Regulatory notices . . . 92

Declaration of Conformity . . . 94

Index . . . 95

Preface

About this guide

This guide describes how to set up, install, connect, and manage the NetApp® Fibre Channel DiskShelf14 (DS14).

Audience

This guide is for qualified system administrators and service personnel who are familiar with Network Appliance™ filers and/or NetCache™ appliances.

Terminology

This guide uses the following terms:

- *Disk shelf* refers to any Fibre Channel disk shelf model.
- *Storage appliance* refers to those NetApp filers, NetCache appliances, and Fibre-Attached Storage (FAS) appliances that support the disk shelves.
- *Device carrier* refers to the container that encases a fan/power supply unit or a disk.
- *Disk* applies to any Fibre Channel disk encased in its device carrier.
- *Loop* refers to one or more daisy-chained disk shelves connected to a storage appliance.
- *Multiloop appliance* refers to a storage appliance with more than one FC-AL adapter connected to disk shelves.
- *LRC module* refers to the device that combines the LRC (Loop Resiliency Circuit), which keeps the FC-AL loop intact during the addition and removal of disks within a disk shelf and the enclosure services processor, which communicates the environmental data of the disk shelf.
- *Terminate* refers to the process of closing a loop on an LRC module by activating a terminate switch on the last disk shelf in the loop. The terminate switch replaces the Output terminators and the auto-termination mechanism in previous versions of Fibre Channel StorageShelves.

Command conventions

You can enter filer commands on the system console or from any client that can obtain access to the filer using a Telnet session. This guide uses the command syntax and output of SunOS 4.1*x* in examples of commands run on a UNIX® workstation. If you use a different version of UNIX, the command syntax and output might be different.

Formatting conventions

The following table lists different character formats used in this guide to set off special information.

Formatting convention	Type of information
Italic type	◆ Words or characters that require special attention. ◆ Placeholders for information you must supply. For example, if the guide requires you to enter the `fctest` *adaptername* command, you enter the characters "fctest" followed by the actual name of the adapter. ◆ Book titles in cross-references.
`Monospaced` font	◆ Command and daemon names. ◆ Information displayed on the system console or other computer monitors. ◆ The contents of files.
`Bold monospaced` font	Words or characters you type. What you type is always shown in lowercase letters, unless your program is case-sensitive and uppercase letters are necessary for it to work properly.

Keyboard conventions

This guide uses capitalization and some abbreviations to refer to the keys on the keyboard. The keys on your keyboard might not be labeled exactly as they are in this guide.

What is in this guide...	What it means...
hyphen (-)	Used to separate individual keys. For example, Ctrl-D means holding down the Ctrl key while pressing the D key.
Enter	Used to refer to the key that generates a carriage return, although the key is named Return on some keyboards.
type	Used to mean pressing one or more keys on the keyboard.
enter	Used to mean pressing one or more keys and then pressing the *Enter* key.

Special messages

This guide contains special messages that are described as follows:

Note

A note contains important information that helps you install or operate the system efficiently.

Caution

A caution contains instructions that you must follow to avoid damage to the equipment, a system crash, or loss of data.

WARNING

A warning contains instructions that you must follow to avoid personal injury.

Safety Information (Sicherheitshinweise)

Safety rules

All products are Class 1 laser devices. You must follow these safety rules when working with this equipment:

WARNING
Failure to follow these directions could result in bodily harm or loss of life.

- When installing disk shelves and a storage appliance into a movable cabinet or rack, install from the bottom up for best stability.
- DC-based systems must be installed in a restricted access location and the two input power terminals for the DC power supply must be connected to separate isolated branch circuits.
- To reduce the risk of personal injury or equipment damage, allow internal components time to cool before touching them and ensure that the equipment is properly supported or braced when installing options.
- This equipment is designed for connection to a grounded outlet. The grounding type plug is an important safety feature. To avoid the risk of electrical shock or damage to the equipment, do not disable this feature.
- This equipment is furnished with one or more replaceable batteries. There is danger of explosion if the battery is incorrectly replaced. Replace the battery only with the same or equivalent type recommended by the manufacturer. Dispose of used batteries according to the manufacturer's instructions.

Warning for units with multiple power cords

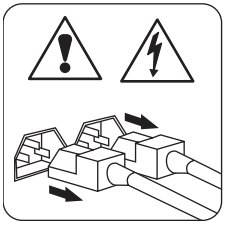

If your storage appliance or disk shelf has multiple power cords and you need to turn the unit off, heed the following warning:

WARNING
This unit has more than one power supply cord. To reduce the risk of electrical shock, disconnect all power supply cords before servicing.

Sicherheitsvorgaben

Alle Produkte sind Lasergeräte der Klasse 1. Die folgenden Sicherheitshinweise sind beim Betreiben des Geräts unbedingt zu beachten:

Vorsicht

Nichtbeachtung dieser Anweisungen kann zu schweren Körperschäden führen oder tödlich sein.

- Bei der Montage der Diskettenregale und Archivierungsgeräte, des NetCache™ -Geräts oder des NearStore™ -Systems in bewegliche Schränke oder Regale sind die Geräte von unten nach oben einzubauen, um optimale Stabilität zu gewährleisten.
- Gleichstrom-Systeme müssen an Betriebsstaette mit beschraenktem Zutritt installiert sein und die beiden Eingangsstromklemmen für das Gleichstrom-Netzteil müssen an separate und isolierte Abzweigleitungen angeschlossen sein.
- Zum Schutz vor Körperverletzung oder Sachschäden am Gerät lassen Sie die inneren Bauteile stets vor dem Berühren abkühlen. Sorgen Sie dafür, dass das Gerät richtig abgestützt ist oder fest aufrecht steht, bevor Sie neues Zubehör einbauen.
- Dieses Gerät ist für die Einspeisung aus einer geerdeten Netzverbindung ausgelegt. Der Netzstecker mit Erdungsvorrichtung ist ein wichtiger Sicherheitsschutz. Zum Schutz vor elektrischem Schlag oder Sachschäden am Gerät die Erdung nicht abschalten.
- Das Gerät ist mit einer oder mehreren auswechselbaren Batterien ausgestattet. Bei unsachgemäßem Auswechseln der Batterie besteht Explosionsgefahr. Batterien nur mit dem vom Hersteller empfohlenen Typ oder entsprechenden Typen ersetzen. Gebrauchte Batterien sind gemäß den Anweisungen des Herstellers zu entsorgen.

Warnhinweis für Geräte mit mehrfachen Netzanschlussleitungen

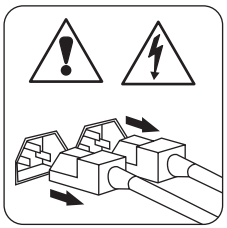

Sollte Ihr Archiviergerät, NetCache-Gerät, NearStore-System oder Diskettenregal mehrfache Netzanschlussleitungen aufweisen und Sie wollen das Gerät abschalten, bitte folgenden Warnhinweis beachten.

ACHTUNG

Gerät besitzt zwei Netzanschlussleitungen. Vor Wartung alle Anschlüsse vom Netz trennen.

Preparing for the Installation 1

About this chapter

This chapter describes the preparation requirements for first-time installation of the DS14 disk shelf.

Topics in this chapter

This chapter describes the following topics:

- "Preparing your site" on page 2
- "Required tools and equipment" on page 5
- "Planning and organizing the installation" on page 6

Preparing your site

About this section

This section tabulates the following information:

- Disk shelf dimensions
- Disk shelf weight
- Space requirements
- Environmental requirements for operating or storing your disk shelf and storage appliance
- Electrical requirements for your disk shelf

Your site must be capable of housing disk shelves with these requirements.

Disk shelf dimensions

The following table lists the dimensions of the disk shelf.

Dimensions	U.S.	Metric
Height	5.25 in. or 3U, where 1U = 1.75 in.	13.3 cm
Width	17.6 in.	44.7 cm
Depth	20 in.	50.85 cm

Disk shelf weight

The following table lists the weight of a single disk shelf based on its configuration.

Weight	U.S.	Metric
When empty	50.6 lbs	23 kg
With 14 disk drives	77 lbs	35 kg

Space requirements

For the disk shelf to have the proper operating conditions, the front of the disk shelf must be at least 1 inch from the nearest obstruction. The back of the disk shelf must be at least 6 inches from the nearest obstruction.

Environmental conditions

The following table lists the maximum environmental conditions that your site must meet to properly run or store your disk shelf and storage appliance.

Environmental condition	Operating condition	Storage condition
Temperature range	50° F to 104° F (10° C to 40° C)	-40° F to 149° F (-40° C to 65° C)
Relative humidity (noncondensing)	5% to 95%	5% to 95% in original shipping container; otherwise, 50%.

Note

The recommended operating condition temperature range is 68 to 77° F (20 to 25° C).

Electrical requirements

Voltage and inrush current requirements: The following table lists the inrush current and input voltage requirements with power applied to the disk shelf and storage appliance.

Current type	Input voltage	Inrush current
AC	220V AC	50A
	110V AC	40A
DC	-60V DC to -40V DC	No greater than 20A under any conditions

Note

The DC power can operate from a -48V or a +48V DC source.

Power requirements: The following table describes the power requirements for the disk shelf connected to two 20A circuits based on a maximum PSU load.

Type of disk shelf	Volts	Amps per disk shelf	Maximum number of disk shelves
DS14	100V to 120V AC	3.95	4
	200V to 240V AC	1.90	8
	-60V to -40V DC	7.50	N/A

Caution

Exceeding the allowed number of disk shelves can lead to power brownouts.

Power consumption and thermal rating: The power consumption (in watts) and the number of BTUs per hour produced by the disk shelf depend on the number and type of devices (for example, power supplies, disks, and so on) installed in the disk shelf.

The following table gives an example of average power consumption for one disk shelf with 14 disks, two fan/power supply units, and two LRC modules.

Type of disk shelf	Power consumption	Thermal rating
DS14	350W	1,191 BTUs/hr.

Required tools and equipment

Required tools and equipment for installation

Assemble the following tools and equipment:

- #1 and #2 Phillips screwdrivers
- Antistatic wrist strap and grounding leash

Caution

The disk shelf uses electronic components that are sensitive to static electricity. Static discharge from your clothing or other fixtures around you can damage these components. Put on an antistatic wrist strap and grounding leash to free yourself of static electricity before touching any electronic components.

- Appropriate screws, if the provided screws do not fit your rack

Note

This guide assumes that the rack has threaded holes. If it does not, you need to provide clip nuts or nut-bars for fastening the screws.

- Additional tools to fabricate the cables for disk shelves with DC power supplies:
  - Wire-strippers
  - Soldering tools
  - Pliers
  - 12 AWG x 3C copper wire (determine the length from the requirements of your environment)
  - Three copper compression connectors similar to the Panduit #LCA 8-10

Planning and organizing the installation

Preparing for the installation

This section identifies the components you require for your storage appliance system and the rules and regulations you need to observe for the proper installation of your storage appliance system. It also provides an overview of the entire system installation process and the appropriate documentation references for the procedures.

For detailed information

For detailed information, see the following topics:

- "Checking shipment contents" on page 7
- "Installation rules and restrictions" on page 8
- "Guide to the installation process" on page 9

Checking shipment contents

Checking shipment package contents

Make sure that your shipment package includes the following items, in addition to this *DiskShelf14 Hardware Guide:*

- A disk shelf containing the power supplies and Fibre Channel disks you ordered
- FC-AL cables, as ordered
- One 0.25m (~10 inches) copper grounding braid and M5 screw
- Four #10-32 screws for securing the disk shelf to a rack

Note

If the #10-32 screws cannot be used in your environment, you need four 6 mm screws.

- Four bezel mounting screw covers
- Envelope with ID labels for the disk shelves, if you are adding these disk shelves to an existing system.
- Three DS14 mounting kit options for each disk shelf, which contains the following items:
  - A center-of-gravity kit with a pair of center-of-gravity brackets and four M5 x 8 mm screws for the center-of-gravity brackets
  - A two-post telco tray kit with eight M5 screws and one two-piece equipment tray with left and right halves
  - A four-post rail kit with one side rail set, one side support set, four location pins, 14 M5 lock washers, 12 M5 washers, four M5 x 18 screws, two M5 x 10 screws/patchlock, 10 M5 x 10 screws, eight M5 nuts, and four M5 cage nuts

Installation rules and restrictions

Rules for installing disk shelves in a rack

You need to observe the following rules and restrictions when installing a disk shelf in a standard 19-inch (48.26 cm) telco equipment rack with mounting rails:

- You must work with another person.

  WARNING
  The disk shelf is extremely heavy. To avoid injuring yourself or damaging the disk shelf, you must work with at least one other person when you install the disk shelf in the rack.

- Install the storage appliance at the bottom of the rack. Installing the storage appliance at the bottom of the rack adds support for the disk shelves.

  WARNING
  Install the equipment from the bottom up when installing it in a movable rack. This helps prevent the rack from tipping over and seriously injuring you or someone else.

  Caution
  The top cover of the storage appliance has ventilation holes. When installing a disk shelf or other equipment above the storage appliance, leave at least 1.5 inches (4 cm) of space for air circulation directly above the ventilation holes. You can install equipment directly on top of the unventilated area of the top cover as long as it does not block the ventilation holes.

- When installing disk shelves in a rack, do not exceed the maximum storage limit for your storage appliance.
- Make sure that the ID on the back panel of each disk shelf matches the ID specified on its label.
- Always install the disk shelves fully loaded.
- If you have any empty drive bays, fill them with the provided empty drive shuttles to ensure proper cooling.

Guide to the installation process

The installation process

The following table is a guide to the disk shelf installation process.

Stage	Procedure	Is the procedure required?	For instructions, go to...
1	Install the storage appliance in a freestanding rack.	Only if the disk shelf installation is part of a new system installation.	Hardware guide for your storage appliance.
2	Install the disk shelves in the rack.	Yes, if the disk shelf is an addition to your existing system or if your new system was not shipped in a system cabinet.	"Installing a DS14 Disk Shelf" on page 11.
3	Connect the disk shelf to the storage appliance.	Only in the following scenarios: ◆ If the disk shelf installation is part of a new system installation. ◆ If the disk shelf is the first in an additional loop to your existing system.	"Connecting a DS14 to storage appliance" on page 25.
4	Connect the disk shelves.	Only in the following scenarios: ◆ If the new system installation has multiple disk shelves. ◆ If the disk shelf is an addition to your existing system.	"Connecting multiple DS14 disk shelves" on page 29. "Installing a DS14 disk shelf in an existing mixed shelf loop" on page 74.
5	Ground the Fibre Channel disk shelves and storage appliance.	Yes.	"Grounding disk shelves" on page 37.

Stage	Procedure	Is the procedure required?	For instructions, go to...
6	Connect the disk shelves to a power source.	Yes.	"Connecting the disk shelf to a power source" on page 39.
		If the system was shipped in a system cabinet, you must connect the system cabinet to a power source.	See the *System Cabinet Guide*.
7	Configure the system.	Yes, if the disk shelf installation is part of a new system installation.	See the *Data ONTAP Software Setup Guide* or the *NetCache Quick Setup*.

Installing a DS14 Disk Shelf 2

About this chapter

This chapter provides all the information you need to install a DS14 into a rack.

Topics in this chapter

This chapter describes the following topics:

- "Before you begin your installation" on page 12
- "Installing a DS14 in a rack" on page 16

Before you begin your installation

About disk shelf installation

Before you install one or more disk shelves in a rack, you need to understand the following information:

- Disk shelf numbering
- Loop IDs
- Supported disk drives
- Drive bay requirements

Disk shelf numbering

Each disk shelf in a loop must have a unique ID. A valid shelf ID is from 1 through 7, with disk shelf 1 connected to the storage appliance. If you install a second or third loop of disk shelves, the disk shelf IDs in each loop must start at 1. The ID of a single disk shelf must be 1.

Note

When connecting a DS14 to a preexisting mixed-shelf loop, the DS14 disk shelf ID must be higher than any of the disk shelves already in the loop.

Each disk shelf is shipped with its assigned ID set on its back panel. You must ensure that the disk shelf has the correct ID number on the label. The ID label is on the right side of the disk shelf, as shown in the following illustration.

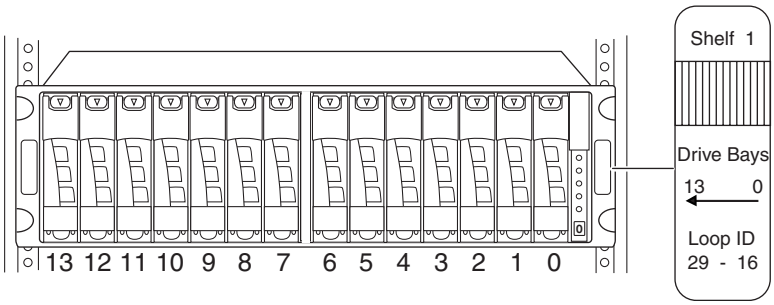

Network Appliance sets the disk shelf IDs at the factory on configured systems, using an ID switch on the back panel. If you order additional disk shelves, you must set the disk shelf ID.

Note

If you enter a shelf ID that is not from 1 through 7, the drive addresses will default to those of a shelf with the ID switch set to 7 even though the Shelf ID indicator in the front operation panel will display a dash (-).

The example in the following illustration shows s DS14 with the disk shelf ID set to 1.

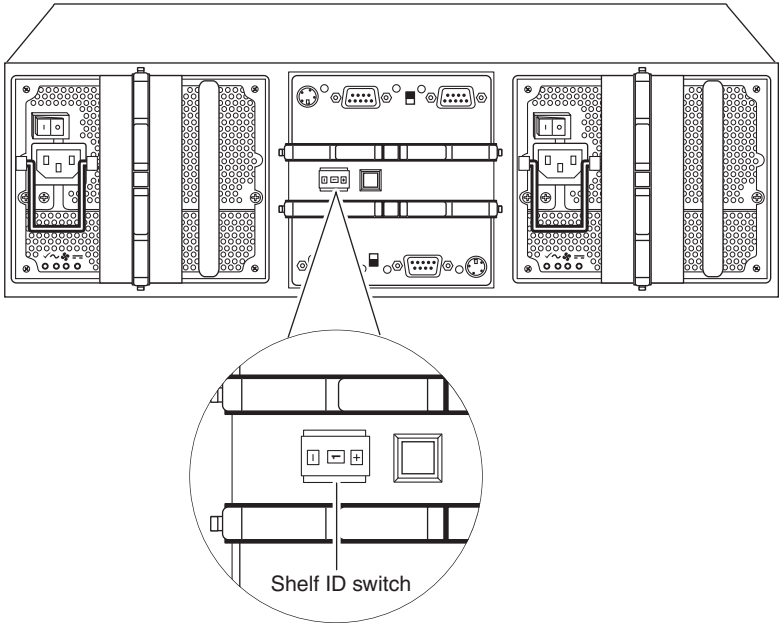

Loop IDs

In addition to identifying the disk shelf ID and the direction of the drive bays, the ID label on the right side of the disk shelf includes the loop ID. The loop ID identifies the disks in the disk shelf. The following table lists the seven disk shelf IDs and their corresponding loop IDs.

DS14 ID	Loop IDs
7	125–112
6	109–96
5	93–80

DS14 ID	Loop IDs
4	77–64
3	61–48
2	45–32
1	29–16

Supported disk drives

The DS14 supports 18-GB, 36-GB, and 72-GB block checksum disk drives.

Drive bay requirements

For enclosure services monitoring to work, drive bays 0 and 1 must contain a disk.

This requirement is posted on the label on the left flange of the disk shelf. The 14 drive bays in the disk shelf are numbered 0 through 13 from right to left, as shown in the following illustration.

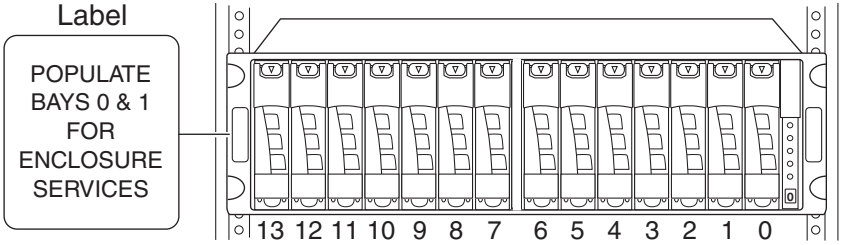

The storage appliance uses the enclosure services monitoring method to monitor environmental conditions of the disk shelf. Enclosure services conditions are communicated to the storage appliance through the LRC module.

The following table describes the three stages of enclosure services monitoring.

Stage	Device	What it does...
1	Storage appliance	Uses a subset of SCSI-3 commands to monitor the disk shelf for data related to disk presence, temperature, power supply units, and fan status.
2	Storage appliance	Sends the commands through its Fibre Channel interface to drive bays 0 and 1 on the disk shelf.
3	Drive bays 0 and 1	Communicate the request to the LRC module and send the data to the storage appliance.
	LRC module	Collects the requested data and sends it to drive bays 0 and 1.

Installing a DS14 in a rack

Installing a DS14

To install the DS14 in a rack, complete the following steps.

WARNING

You must install each disk shelf with either the telco tray or the center-of-gravity brackets that came in your shipment package. Do not ear-mount the DS14 into a telco-type rack; the DS14 disk shelf will collapse from the rack under its own weight.

Step	Action	
1	Put on the antistatic wrist strap and grounding leash.	
2	**If the disk shelf is...**	**Then...**
	Part of a new storage appliance system that you are installing	Install your storage appliance. See your storage appliance hardware guide for more information.
	An addition to an existing storage appliance system	Verify that you received the envelope with the disk shelf ID labels.
3	Select two holes on each side of the rack for the installation.	
4	**If you are using the...**	**Then...**
	Center-of-gravity bracket kit	**1.** Align each bracket to these holes on the rack and secure the bracket with the #10 Phillips head screws. **2.** Select two holes in the middle of each side of the DS14 to which you want to attach the brackets. **3.** Align the holes on the DS14 with the holes on the bracket and secure the disk shelf with the #10 Phillips head screws.

Step	Action	
	The following illustration shows a DS1 installed in a rack using a center-of-gravity bracket. 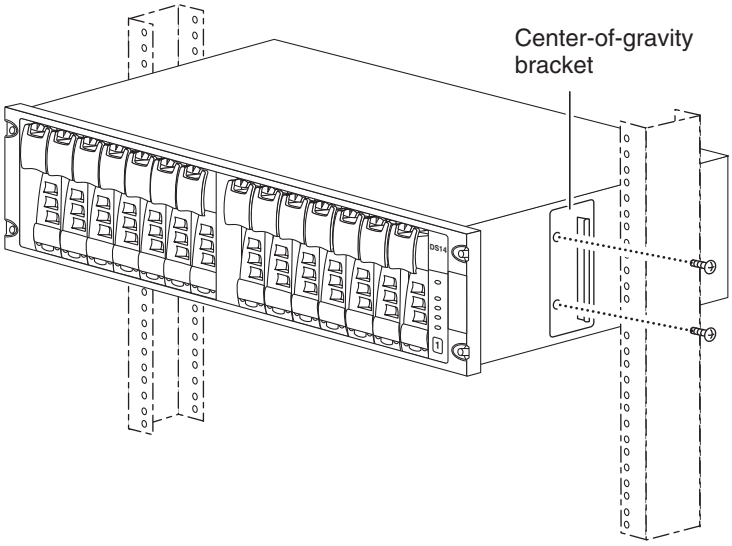 	
	Two-post telco tray kit	**1.** Align the left post screw holes on the two-post rack with the screw holes on the left half of the telco tray, then secure it to the post with four M5 screws. **2.** Align the right half of the telco tray with the left half and repeat Step 1 to secure it to the post. **3.** Install the DS14 onto the rack mount kit and retain it with the mounting screws to secure the DS14 mounting flanges to the telco-type rack. **4.** Conceal the mounting screws with the provided bezel mounting screw covers.

Step	Action
	The following illustration shows the two-post telco tray kit being installed. 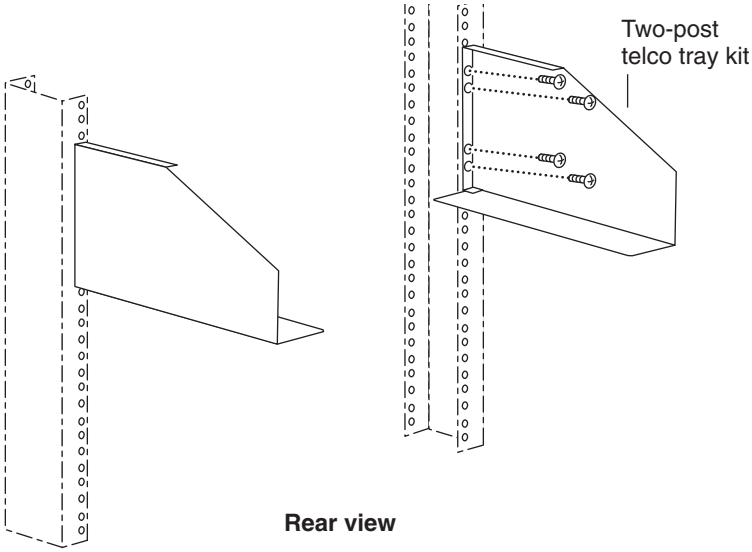 The following illustration shows a DS14 being installed in a two-post telco tray kit. 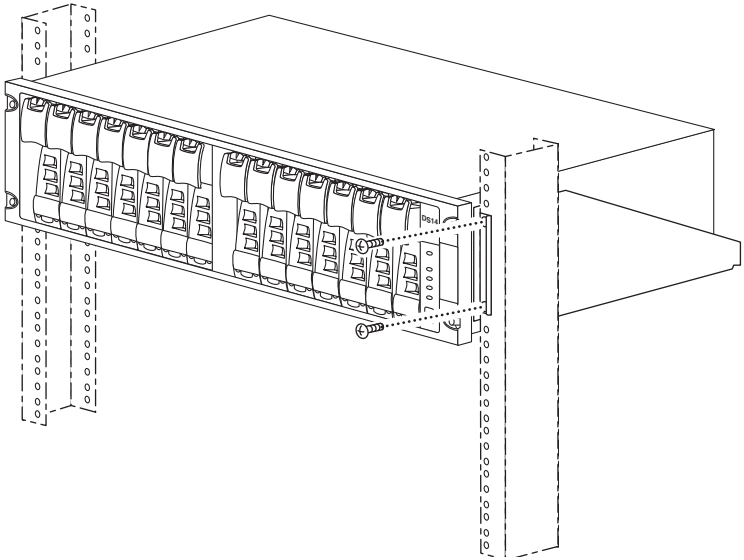

Step	Action	
	Four-post rail kit	For Step 1 through Step 5, see the accompanying illustration. **1.** Connect the left support with the left rail, using three M5 nuts, three lock washers, and three M5 x 10 screws. Leave them loose enough so that you can adjust the length of the rail. **2.** Align the holes in the front of the assembled rail with the front post of the four-post rack, and secure it to the post with two location pins and washers. **3.** Attach the rear of the assembled rail to the rear post using two M5 x 10 screws, washers, and lock washers, then tighten the rail and support. **4.** Repeat Step 1 through Step 3 for the right support rail. **5.** Install the clip nuts for the disk shelf into the equipment rack posts. The bottom-most clip nut should be directly above the bottom locator pin and the top clip nut should be six holes above the bottom clip nut. **6.** Install the DS14 disk shelf onto the rack mount kit and retain it with the mounting screws to secure the DS14 disk shelf mounting flanges to the front posts of the rack. **7.** Conceal the mounting screws with the provided bezel mounting screw covers.

Step	Action
The following illustration showshow to install a four-post rail kit.	

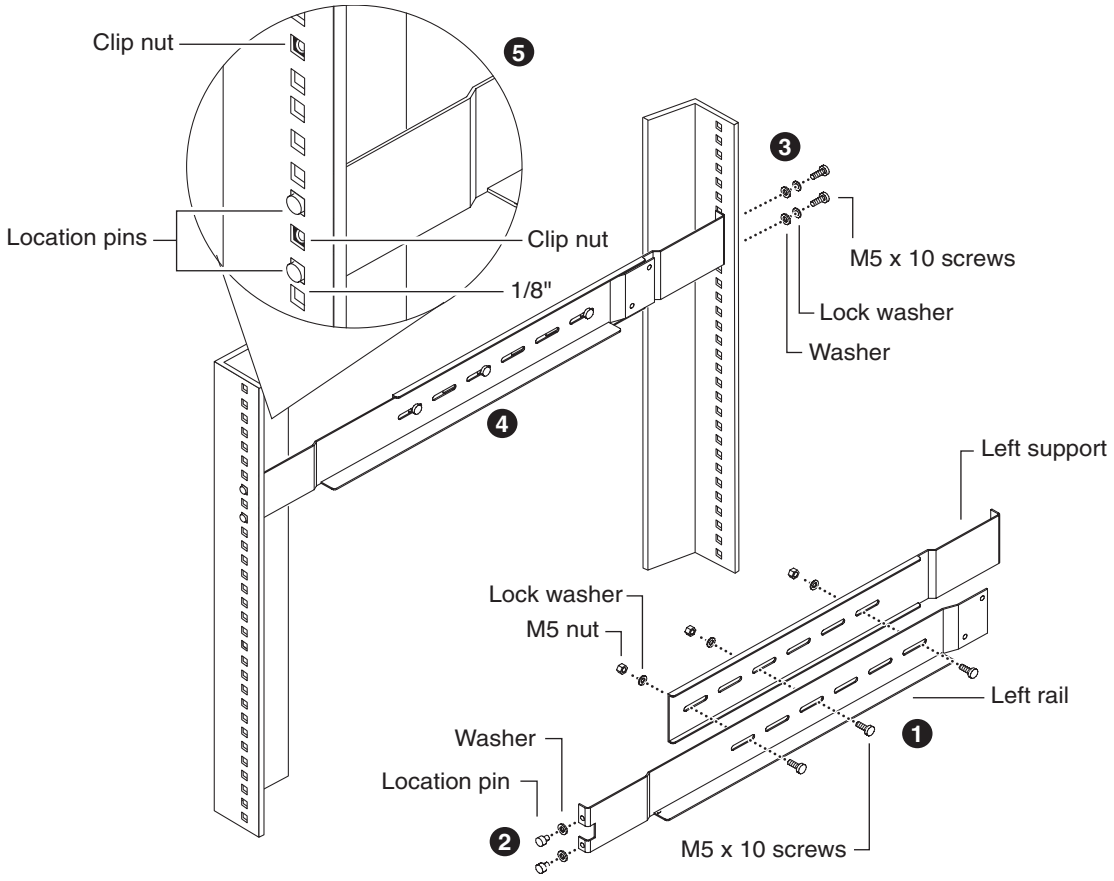

Step	Action	
5	**If the installed disk shelf is...**	**Then...**
	Part of a new storage appliance system	Make sure that the disk shelf ID is correct. **Note** For a single disk shelf installation, the disk shelf ID is 1.
	An addition to an existing storage appliance system	Change the disk shelf ID with the following procedure: **1.** Press the thumbwheel switch on the rear of the disk shelf and use the + button to raise the number and the - button to lower the number to valid ID from 1 through 7. **Note** If you change a disk shelf ID, you must power-cycle the disk shelf for the new ID to take effect. The disk shelf ID display on the front of the disk shelf blinks until you power-cycle the disk shelf. **2.** Select the correct label from the envelope identified in Step 2 and attach it to the right flange of the new disk shelf.
6	If there are multiple disk shelves in the installation on the same loop, follow Step 4 and Step 5 to install the remaining disk shelves in ascending numerical order, according to the IDs on their labels.	
7	Go to "Connecting a DS14 Disk Shelf" on page 23.	

Connecting a DS14 Disk Shelf 3

About this chapter

This chapter describes how to connect a single DS14 or a loop of disk shelves to a supported storage appliance, how to ground your system, and how to connect your system to power.

Topics in this chapter

This chapter describes the following topics:

- "Connecting disk shelves to a storage appliance" on page 24
- "Grounding disk shelves" on page 37
- "Connecting the disk shelf to a power source" on page 39

Connecting disk shelves to a storage appliance

About connecting the disk shelves

This section describes how to connect the DS14 to a supported storage appliance. The procedures also describe the options available for cabling the LRC B on the DS14, if the DS14 is not used in a clustered filer system. The following options are possible:

- Cabling a DS14 to a storage appliance that has an FC-AL adapter with a single copper interface
- Cabling a single DS14 or the first DS14 in a single loop to a filer that has Data ONTAP™ 6.1 software or later and two FC-AL adapters with single copper interfaces

  Note

  This option enables you to use the software enhancements provided by Data ONTAP 6.1 or later and incorporate redundancy in your filer system.

- Cabling a DS14 to a storage appliance that has an FC-AL adapter with a dual optical interface

For detailed information

The following sections provide detailed information about connecting one or more disk shelves in a rack:

- "Connecting a DS14 to storage appliance" on page 25
- "Connecting multiple DS14 disk shelves" on page 29
- "Connecting to multiple loops of disk shelves" on page 31

Connecting a DS14 to storage appliance

Assumptions about this procedure

The assumption about this procedure is that the DS14 is the only disk shelf connected to the storage appliance or it is the first disk shelf in a single loop.

Connecting a DS14 to your filer/ NetCache appliance

To connect the DS14 to a storage appliance, complete the following steps.

Step	Action	
1	Put on the antistatic wrist strap and grounding leash.	
2	Make sure that the storage appliance and the disk shelf are turned off.	
3	**If...**	**Then...**
	Your storage appliance has an FC-AL adapter with a single copper interface	Connect the cable to the FC-AL adapter on the storage appliance.
	Your single filer runs Data ONTAP 6.1 or later and has two FC-AL adapters with single copper interfaces	Connect the cable to one of the FC-AL adapters on the filer.
	Your storage appliance has a dual optical interface	Connect one end of the dual-headed cable into Port A (Port 1) of the adapter on the storage appliance.

Step	Action	
4	**If the LRC A input...**	**Then...**
	Has a copper interface	**1.** Connect the DB-9 end of the cable to the LRC A Input on disk shelf 1. **2.** Tighten the locking screws on the DB-9 connector with a screwdriver.
	The following illustration shows a DS14 connected to a storage appliance using a copper interface. 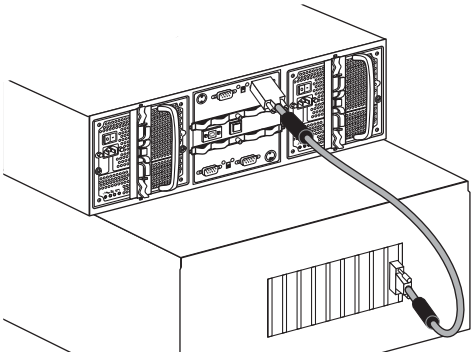	
	Has a dual optical interface	Connect the other end of the dual-headed cable to the LRC A Input on disk shelf 1
	The following illustration shows a DS14 connected to a storage appliance using a dual optical interface. 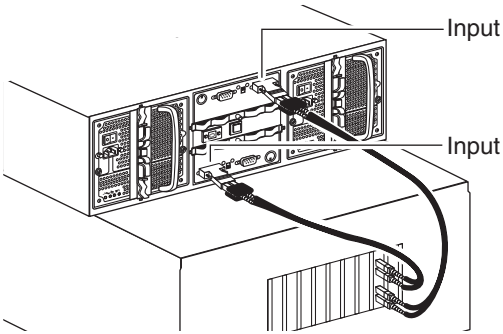	

Step	Action	
5	Set the terminate switch on Channel A to the On position (down). The following illustration shows the terminate switch set to the On position on LRC A. 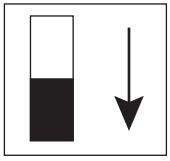 LRC A active terminate position	
6	**If...**	**Then...**
	Your storage appliance has an FC-AL adapter with a single copper interface	Go to Step 7.
	Your single filer runs Data ONTAP 6.1 or later and has two FC-AL adapters with single copper interfaces	Connect the cable to the second FC-AL adapter on the filer.
	Your storage appliance has a dual optical interface	Connect one end of the dual-headed cable into Port B (Port 2) of the adapter on the storage appliance.

Step	Action	
7	**If the LRC B input...**	**Then...**
	Is a copper interface on a DS14 and is not part of a clustered filer system	Place a terminator on the Fibre Channel input of Channel B.
	Has a copper interface and your single filer runs Data ONTAP 6.1 or later and has two FC-AL adapters with single copper interfaces	**1.** Connect the DB-9 end of the cable to the LRC B Input on disk shelf 1. **2.** Tighten the locking screws on the DB-9 connector with a screwdriver.
	Has a copper interface and is part of a clustered filer system	See the cluster guide for your filer for more information.
	Has an optical interface	Connect the other end of the dual-headed cable to the LRC B Input on disk shelf 1.
8	**If the disk shelf...**	**Then...**
	Is the only disk shelf in the loop connected to the storage appliance	**1.** Set the terminate switch on Channel B to the On position (up). **Note** The On position of LRC B is the inverse of LRC A. **2.** Connect the disk shelf to a power source. See "Connecting the disk shelf to a power source" on page 39.
	Is the first disk shelf in a loop of DS14 disk shelves	Connect the disk shelf to the remaining disk shelves. See "Connecting multiple DS14 disk shelves" on page 29.

Connecting multiple DS14 disk shelves

Connecting multiple DS14 disk shelves

To connect multiple DS14 disk shelves, complete the following steps.

Step	Action
1	Connect the remaining disk shelves in ascending order by completing the following connections: **1.** Connect one end of the cable to the LRC A Output on the DS14. **2.** Connect the other end of the cable to the LRC A Input on the next disk shelf.
2	On all but the last disk shelf in the loop, place the terminate switch on LRC A to the Off position (up).
3	On the last disk shelf in the loop, place the terminate switch on LRC A to the On position (down).
4	Connect the remaining disk shelves in ascending order by completing the following connections: **1.** Connect one end of the cable to the LRC B Output on the DS14.

Step	Action
	2. Connect the other end of the cable to the LRC B Input on the next disk shelf. 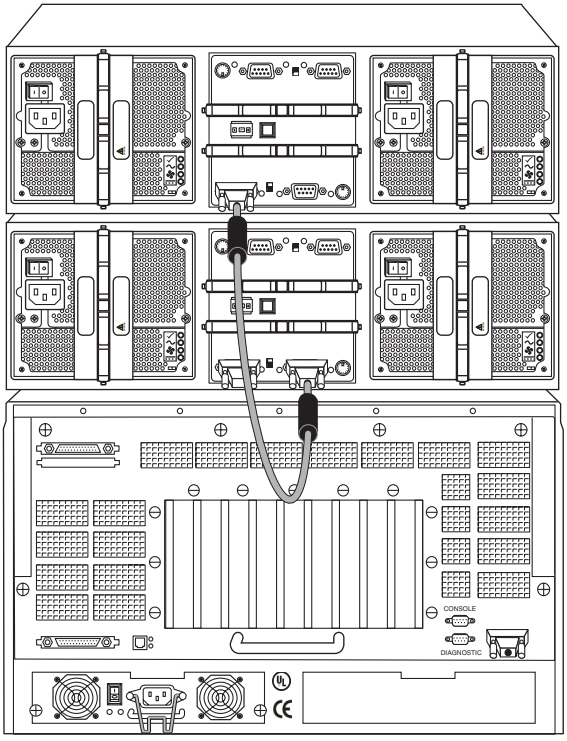
5	On all but the last disk shelf in the loop, place the terminate switch on LRC B to the Off position (down).
6	On the last disk shelf in the loop, place the terminate switch on LRC B to the On position (up).
7	Connect the disk shelf to a power source. See "Connecting the disk shelf to a power source" on page 39.

Connecting to multiple loops of disk shelves

Requirements for connecting additional loops

Before you connect multiple loops of disk shelves, make sure that your storage appliance meets the following requirements:

- Multivolumes and RAID are correctly configured for filers. See the Data ONTAP *System Administrator's Guide* for information about how to configure multivolumes and RAID.
- The disk firmware is up-to-date for all the disks in each disk shelf. Go to http://now.netapp.com for the correct firmware versions.
- Multiple loop configurations is supported by your storage appliance. To obtain information about the current configurations supported by your storage appliance, see the System Configuration Guide at http://now.netapp.com.

Connecting multiple loops to a storage appliance

Each additional loop requires an FC-AL disk adapter in the storage appliance. See the System Configuration Guide at http://now.netapp.com for information about the adapter supported by your storage appliance.

The following illustration shows a storage appliance connected to two loops of disk shelves without the benefit of multipath cabling.

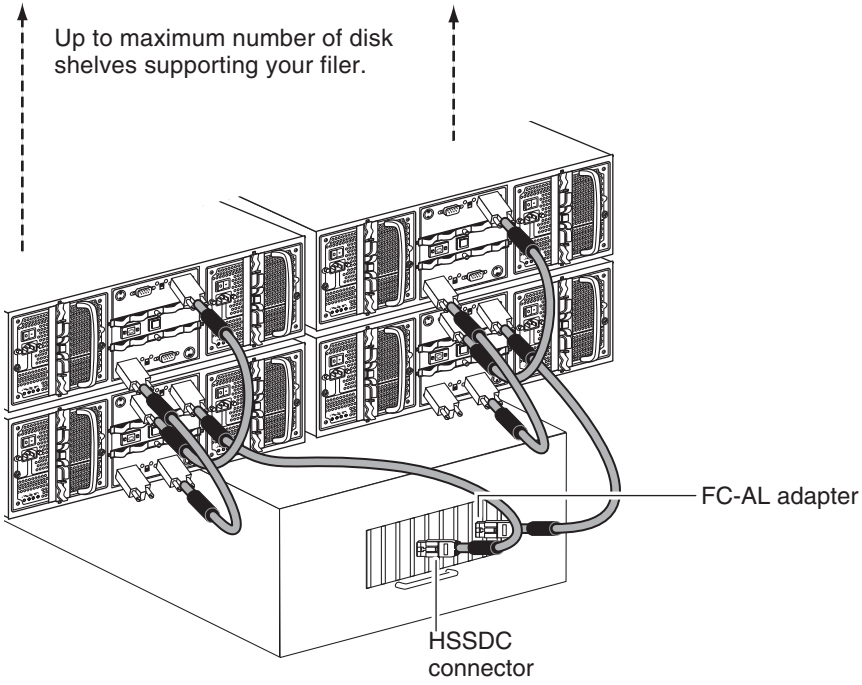

To connect another loop of disk shelves to a storage appliance, complete the following steps.

Step	Action	
1	**If...**	**Then**
	Your single filer runs Data ONTAP 6.1 or later and has four FC-AL adapters with single copper interfaces	Connect the loop to the remaining pair of FC-AL adapters on the filer by following the procedure in "Connecting a DS14 to storage appliance" on page 25.

Step	Action	
	Your storage appliance has a dual optical interface	**1.** Follow Step 1 through Step 6 of the procedure in "Connecting a DS14 to storage appliance" on page 25. **2.** Connect the storage appliance to LRC B of disk shelf 1 in the next loop of disk shelves. See "Ensuring data integrity with multiple loops" on page 33 which tabulates possible cabling options. **3.** Go to Step 8 of the procedure in "Connecting a DS14 to storage appliance" on page 25.

Ensuring data integrity with multiple loops

Software enhancements provided by Data ONTAP 6.1 or later enable you to ensure data integrity and incorporate redundancy in your filer system.

FC-AL adapters with the copper interface: Each loop of disk shelves must be connected to two FC-AL adapters.

The following table shows the possible configuration for a filer with four adapters connected to two loops of shelves.

Number of loops		Number of copper interface adapters			
		1	**2**	**3**	**4**
1	LRC A	X	-	-	-
	LRC B	-	-	-	X
2	LRC A	-	-	X	-
	LRC B	-	X	-	-

The following illustration shows a filer with two copper FC-AL adapters connected to a single loop of disk shelves with the benefit of multipath cabling.

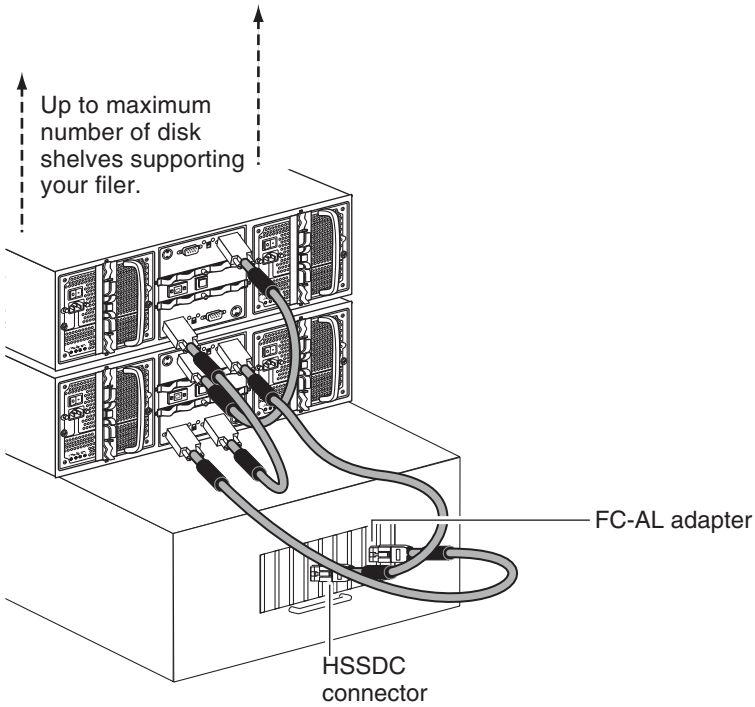

FC-AL adapters with the dual optical interface: If Port A (Port 1) of the adapter is connected to the LRC A of disk shelf 1 of a particular loop, Port B (Port 2) of the same adapter is not connected to LRC B of disk shelf 1 of the same loop.

The following table shows the possible configuration for a storage appliance with two adapters connected to two loops of shelves.

Number of loops		Number of dual optical interface adapters			
		1		2	
		A	B	A	B
1	LRC A	X	-	-	-
	LRC B	-	-	-	X
2	LRC A	-	-	X	-
	LRC B	-	X	-	-

The following illustration shows a filer with two dual optical FC-AL adapters connected to two loops of disk shelves with the benefit of multipath cabling.

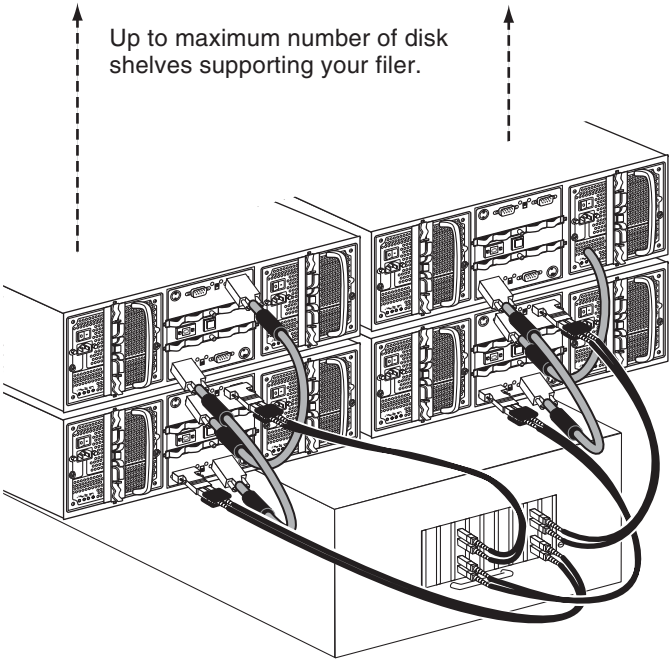

The following table shows a possible configuration for a filer with three adapters connected to three loops of DS14 disk shelves.

Number of loops		Number of dual optical interface adapters					
		1		2		3	
		A	B	A	B	A	B
1	LRC A	X	-	-	-	-	-
	LRC B	-	-	-	X	-	-
2	LRC A	-	-	X	-	-	-
	LRC B	-	-	-	-	-	X
3	LRC A	-	-	-	-	X	-
	LRC B	-	X	-	-	-	-

The following table shows the possible configuration for a filer with four adapters connected to four loops of DS14 disk shelves.

Number of loops		Number of dual optical interface adapters							
		1		2		3		4	
		A	B	A	B	A	B	A	B
1	LRC A	X	-	-	-	-	-	-	-
	LRC B	-	-	-	X	-	-	-	-
2	LRC A	-	-	X	-	-	-	-	-
	LRC B	-	-	-	-	-	X	-	-
3	LRC A	-	-	-	-	X	-	-	-
	LRC B	-	-	-	-	-	-	-	X
4	LRC A	-	-	-	-	-	-	X	-
	LRC B	-	X	-	-	-	-	-	-

Grounding disk shelves

About grounding connected disk shelves

For proper grounding, you must daisy-chain the disk shelves and storage appliance together with the provided braided copper cables and screws. Multiple racks should be grounded together.

Each disk shelf is shipped with a 0.25m (~6 inch) braided copper cable and an M5 x 0.5 inch Phillips head screw. The copper cable has a hole on each end for grounding filer-to-shelf or shelf-to-shelf.

The storage appliance is shipped with a 0.75m (~19 inch) braided copper cable and an 8-32 x 0.5 inch Phillips head screw. The copper cable has a lug connector on each end for grounding filer-to-shelf or filer-to-second loop.

Note

The copper cable shipped with the storage appliance is only necessary when grounding the storage appliance to a second loop, or when grounding the storage appliance to a disk shelf farther away than 0.75m (the length of the filer-to-shelf cable).

Grounding connected disk shelves

To ground connected disk shelves to a storage appliance, complete the following steps.

Step	Action
1	Secure the lug at one end of the 0.25m braided copper cable to the threaded insert at the back of the storage appliance using the M5 x 0.5 inch screw.
2	Overlay the hole on one end of another 0.25m copper cable to the unused lug end of the copper cable connected to the storage appliance.
3	Using the provided M5 x 0.5 inch shelf screw, connect both copper cables to the threaded hole adjacent to the power supply receptacles on disk shelf 1.

Step	Action
4	Overlay the hole on one end of another 0.25m copper cable to the unused lug end of the copper cable connected to the preceding disk shelf.
5	Using the provided M5 x 0.5 inch shelf screw, connect both copper cables to the threaded hole adjacent to the power supply receptacles on the next disk shelf. The following illustration shows disk shelves grounded to an F700 series storage appliance. You can ground any NetApp storage appliance in the same manner. 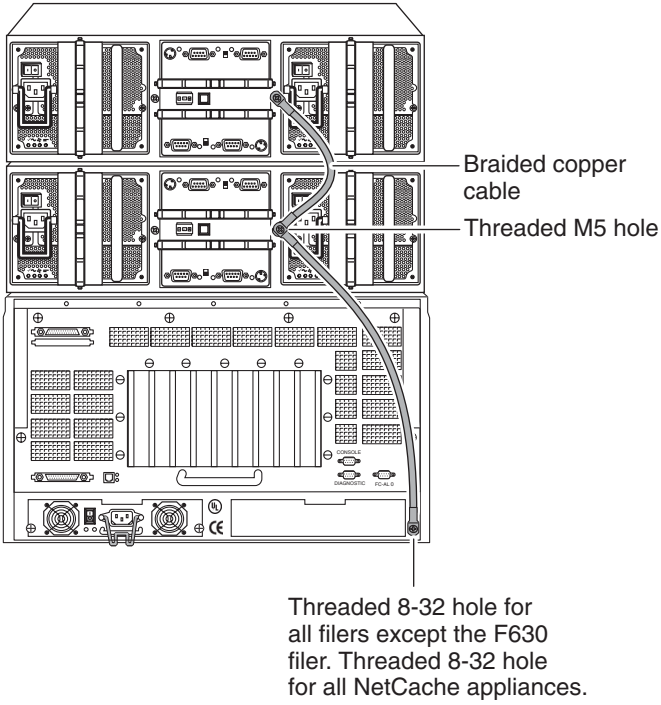
6	Repeat Step 4 and Step 5 with the supplied braided copper cables until the storage appliance and all disk shelves are grounded together.

Connecting the disk shelf to a power source

About the power supplies

The disk shelf is shipped with two power supplies, labeled PSU1 and PSU2, respectively.

About AC power supplies: The disk shelf is shipped with an AC power cord for each power supply. You must have separate circuit breakers for each power supply.

About DC power supplies: You must fabricate the power cords for the DC power connections labeled plus (+), minus (-), ground (G), and no connect (N/C).

Connecting the disk shelf to power

To connect a disk shelf to a power source, complete the following steps.

Step	Action	
1	Make sure that the storage appliance and the disk shelves are turned off.	
2	**If you are connecting to...**	**Then...**
	AC power	**1.** Plug the power cord for PSU1 into the power receptacle on the left connector (rear view). **2.** Plug the power cord for PSU2 into the power receptacle on the right connector (rear view). **3.** Fasten the power cords with the clamps. **4.** Plug the other end of each power cord into a grounded AC power source.

Step	Action	
		5. Turn on the power switch. **Note** The default spin up time for all disks in the disk shelf is 60 seconds. Reduce this spin up time to 20 seconds by turning on the switches of both power supplies within 5 seconds of each other.
	DC power	**1.** Remove the cover over the DC input connector. **2.** Fabricate a three-way cable: **a.** Use wire-strippers to strip an inch of the protective sheathing from the copper wire. **b.** Identify the positive, negative, and ground wires. **c.** Crimp and solder a connector to the end of the positive, negative, and ground wires. **3.** Connect the ground, positive, and negative wires to the power supply. **4.** Place the terminal cover over the DC input connector to avoid shorting the power supply cables. **5.** Plug the other end of each power cord into a power source and turn it on.

Monitoring a DS14 Disk Shelf 4

About this chapter

This chapter describes how to monitor the disk shelf from the error messages displayed on the console that is connected to the storage appliance and identifies the location of the various LEDs on the disk shelf.

Note

The quick reference cards in the slide-out tray at the base of the disk shelf describe the functions of each LED on the disk shelf and the suggested course of action.

Topics in this chapter

This chapter provides information about the following topics:

- "Monitoring the front operation panel" on page 42
- "Front operation panel console error messages" on page 44
- "Monitoring the DS14 power supply" on page 49
- "Monitoring the DS14 Fibre Channel disk" on page 51

Monitoring the front operation panel

About monitoring the front operation panel

The front operation panel has five LEDs and a disk shelf ID display. The LEDs indicate whether your disk shelf is functioning normally or there are problems with the hardware. You can also identify any hardware failure associated with the front operation panel of the disk shelf from the error messages displayed on your storage appliance console.

Location of LEDs

The following illustration shows the location of the disk shelf ID display and the front panel LEDs.

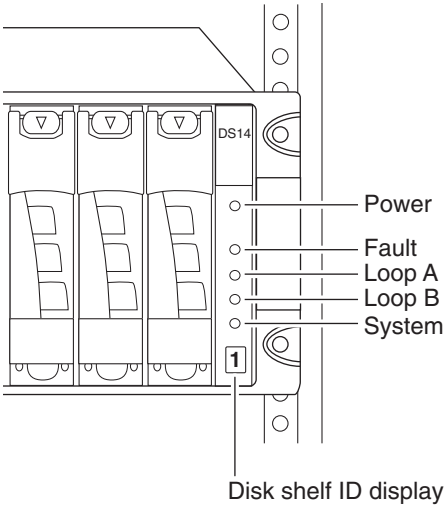

Note

The Fault and System LEDs are amber. The other three LEDs are green. See "Interpreting the front panel LEDs" on page 43 for an illustrated explanation of how the LEDs function.

Monitoring the disk shelf ID

When you use the thumbwheel switch on the back of the disk shelf to change the disk shelf ID, the disk shelf ID display on the front panel blinks until you power-cycle the disk shelf to make the change take effect.

Interpreting the front panel LEDs

Use the following table to interpret the front panel LEDs.

Fault condition	Description	LEDs					Action item
		Power	Fault	Loop A	Loop B	System	
N	Normal operation	Green on	Amber off	Green on or off	Green on or off	Amber off	None.
1	LRC A failure	Green on	Amber off	Green off	Green on	Amber on	Check LRC A LED status. See "Interpreting LRC module LEDs" on page 47.
2	LRC B failure	Green on	Amber off	Green on	Green off	Amber on	Check LRC B LED status.See "Interpreting LRC module LEDs" on page 47.
3	LRC A loop fault	Green on	Amber off	Green off	Green on	Amber off	Check In and Out port for LRC A. See "Interpreting LRC module LEDs" on page 47.
4	LRC B loop fault	Green on	Amber off	Green on	Green off	Amber off	Check In and Out port for LRC B. See "Interpreting LRC module LEDs" on page 47.
5	Enclosure hardware failure	Green on	Amber off	Green on or off	Green on or off	Amber on	Contact Network Appliance customer service.
6	No SES drive fitted	Green on	Amber off	Green on or off	Green on or off	Amber flashing	Check drives in bays 0 and 1.

Fault condition	Description	LEDs					Action item
		Power	Fault	Loop A	Loop B	System	
7	Drive Port A bypassed	Green on	Amber off	Green flashing	Green on	Amber off	Check the disk LED. See "Interpreting Fibre Channel disk LEDs" on page 51.
8	Drive Port B bypassed	Green on	Amber off	Green on	Green flashing	Amber off	Check the disk LED. See "Interpreting Fibre Channel disk LEDs" on page 51.
9	Any PSU or fan fault	Green on	Amber on	Green on or off	Green on or off	Amber off	Check power supply unit LED panel. See "Interpreting power supply LEDs" on page 50.
10	Temperature fault	Green on	Amber on	Green on or off	Green on or off	Amber flashing	Check environmental conditions.
11	Front panel hardware failure	Green on	Amber off	Green flashing	Green flashing	Amber on	Contact Network Appliance customer service.

Front operation panel console error messages

The following error messages appear on your storage appliance console if an SES element on the front operation panel fails. For information about replacing a disk shelf, see "Replacing a disk shelf in a rack" on page 54.

Error message	Action required
`Temperature sensor Element 1: failed`	The temperature sensor on the front operation panel failed. Contact Network Appliance customer service to replace the disk shelf.
`Alarm Element 1: failed`	The alarm located on the front operation panel failed. Contact Network Appliance customer service to replace the disk shelf.

Error message	Action required
`Display Element 1: failed`	The alarm located on the front operation panel failed. Contact Network Appliance customer service to replace the disk shelf.

Monitoring the DS14 LRCs

About monitoring the DS14 LRCs

The DS14 LRC has three LEDs. The LEDs indicate whether the LRC is functioning normally or there any problems with the hardware. You can also identify any hardware failure associated with the LRCs from the error messages displayed on your storage appliance console.

Location of LRC module LEDs

The LRCs are located in the middle of the back of the disk shelf. The LRC module contains three LEDs.

The following illustration shows the location of the LEDs for an LRC with copper interfaces.

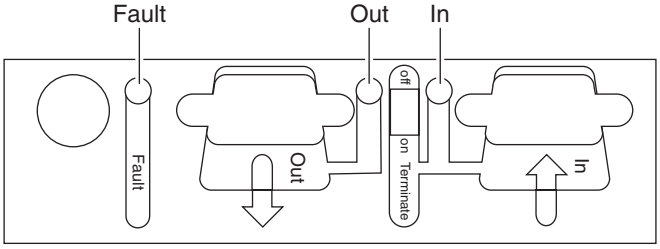

Note

The Fault LED is amber. The other two LEDs are green. See "Interpreting LRC module LEDs" on page 47 for an illustrated explanation of how the LEDs function.

The following illustration shows the location of the LEDs for an LRC with an optical input interface and copper output interface.

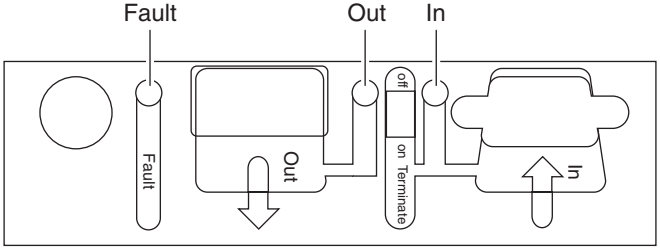

Note

Because LRC B on the DS14 is inverted, the location of the LRC B LEDs is the inverse of what is shown in the preceding illustrations.

Interpreting LRC module LEDs

The following table describes how to interpret the LRC module LEDs.

Fault condition	Description	LEDs			Alarm
		In port	Out port	Fault	
N	Normal operation	Green on	Green on	Amber off	None
1	ESI/LRC failure	Green on or off	Green on or off	Amber on	1 sec. beep
2	No signal on Input port	Green off	Green on	Amber off	None
3	No signal on Output port	Green on	Green off	Amber off	None
4	Invalid termination	Green on or off	Green flashing	Amber off	None

LRC console error messages

The following error messages appear on your storage appliance console if an SES element on the LRC fails. For information about replacing the LRC, see "Replacing an LRC" on page 66.

Error message	Action required
`Temperature sensor Element 2: failed`	The temperature sensor on LRC module A on the top back of the disk shelf failed. Contact Network Appliance customer service to replace the LRC.
`Temperature sensor Element 3: failed`	The temperature sensor on LRC module B on the bottom back of the disk shelf failed. Contact Network Appliance customer service to replace the LRC.
`SES electronics Element 1: failed`	LRC module A on the top back of the disk shelf failed. Contact Network Appliance customer service to replace the LRC.

Error message	Action required
`SES electronics Element 2: failed`	LRC module B on the bottom back of the disk shelf failed. Contact Network Appliance customer service to replace the LRC.

Monitoring the DS14 power supply

LEDs on the DS14 power supply

The DS14 power supply has four LEDs. The LEDs indicate whether the power supply or the integrated fan module is functioning normally or there are problems with the hardware. You can also identify any hardware failure associated with the power supplies from the error messages displayed on your storage appliance console.

Location of LEDs

Each power supply, which contains two LEDs, is encased in a device carrier and housed at the rear of the disk shelf. The following illustration shows the location of the power supply LEDs.

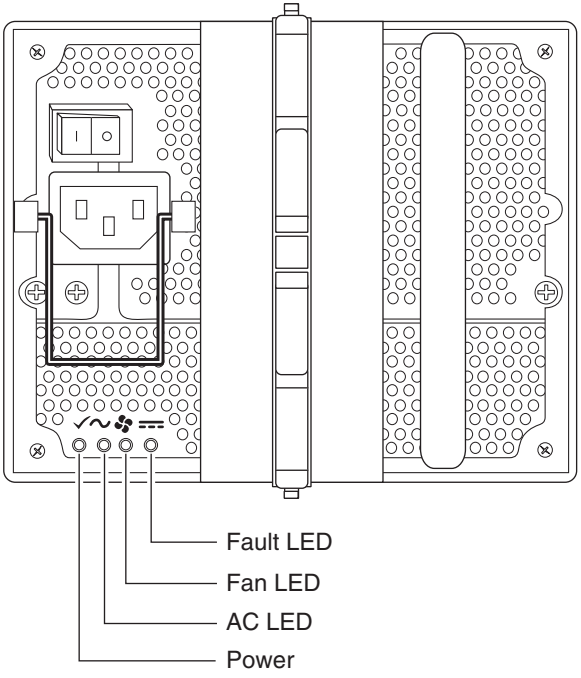

Interpreting power supply LEDs

The following table describes how to interpret the power supply LEDs.

Fault condition	Description	LEDs				Alarm
		Power	AC	Fan	Fault	
N	Normal operation	Green on	Amber off	Amber off	Amber off	None
1	Power supply failure	Green off	Amber off	Amber off	Amber on	1 sec. beep
2	Fan failure	Green off	Amber off	Amber on	Amber off	1 sec. beep
3	No power to PSU	Green off	Amber on	Amber off	Amber on	1 sec. beep

Power supply console error messages

The following error messages appear on your storage appliance console if an SES element on the power supply fails. For information about replacing the power supply, see "Replacing a power supply in a disk shelf" on page 62.

Error message	Action required
`Power supply Element 1: failed`	The power supply unit on the left at the back of the disk shelf failed. Contact Network Appliance customer service to replace the power supply.
`Power supply Element 2: failed`	The power supply unit on the right at the back of the disk shelf failed. Contact Network Appliance customer service to replace the power supply.
`Cooling element Element 1: failed`	The integrated fan module in the power supply unit on the left at the back of the disk shelf failed. Contact Network Appliance customer service to replace the power supply.
`Cooling element Element 2: failed`	The integrated fan module in the power supply unit on the right at the back of the disk shelf failed. Contact Network Appliance customer service to replace the power supply.

Monitoring the DS14 Fibre Channel disk

About monitoring the DS14 Fibre Channel disk

The DS14 Fibre Channel disk has two LEDs. The LEDs indicate whether the disk is functioning normally or there are problems with the hardware.

Location of LEDs

The following illustration shows the Fibre Channel disk, which has two LED indicators on the front.

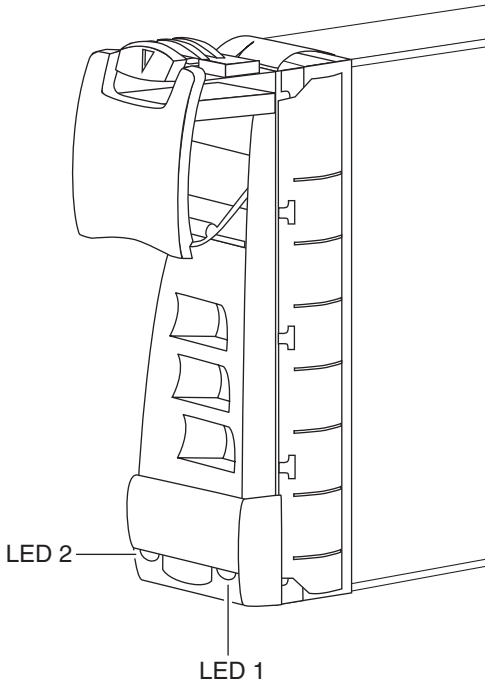

Interpreting Fibre Channel disk LEDs

Use the following table to interpret the disk LEDs.

LED 1 (Green)	LED 2 (Amber)	State
Off	Off	No drive installed.

LED 1 (Green)	LED 2 (Amber)	State
On/Blink off	Off	Drive installed and operational.
Off	Flashes 1 second on and 1 second off	SES device identification set.
Off	On	SES device fault bit set. Drive is failed.
Off	Flashes 3 seconds on and 1 second off	Disk port isolated (either port).

Replacing DS14 Devices 5

About this chapter

This chapter describes how to replace disk shelves in a rack, disks in a disk shelf, and other devices.

Topics in this chapter

This chapter provides information about the following topics:

- "Replacing a disk shelf in a rack" on page 54
- "Replacing a disk in a disk shelf" on page 59
- "Replacing a power supply in a disk shelf" on page 62
- "Replacing an LRC" on page 66

Replacing a disk shelf in a rack

About this section

This section discusses how to remove a disk shelf from a rack. It also discusses how to remove a disk shelf from a daisy-chain configuration. It does not discuss how to install a disk shelf. For information about installing a disk shelf in a rack, see "Installing a DS14 in a rack" on page 16.

For detailed information

For detailed information about removing a disk shelf from a rack, see the following topics:

- "Removing a disk shelf from a single disk shelf configuration" on page 55
- "Removing a disk shelf from a loop" on page 57

Removing a disk shelf from a single disk shelf configuration

Removing a disk shelf

To remove a disk shelf from a single disk shelf configuration, complete the following steps.

Step	Action	
1	Put on the antistatic wrist strap and grounding leash.	
2	**If the disk shelf connects to a...**	**Then...**
	Filer/FAS appliance	Shut down the filer/FAS appliance by entering the following command at the console: `halt` **Caution** Always use the `halt` command to perform a clean shutdown.
	NetCache appliance	1. From the NetCache Manager home page, select Maintenance tab > System Control > Halt/Reboot. 2. Select Halt NetCache.
3	Verify that the LCD display at the front of your storage appliance displays the following message: `Halted`	
4	**If the disk shelf has...**	**Then...**
	AC power supplies	Turn off the power switch on the disk shelf.
	DC power supplies	Turn off and unplug the cables from the power source.

Step	Action
5	Disconnect the two disk shelf power cords from the disk shelf.
6	Disconnect the Fibre Channel cable connecting the disk shelf and storage appliance.
7	Disconnect the grounding strap connecting the disk shelf and storage appliance.
8	Use a Phillips screwdriver to remove the screws securing the disk shelf to the telco tray, the center-of-gravity bracket, or the four-post rack.
9	With the help of another person, remove the disk shelf from the rack. **WARNING** **Because the disk shelf is very heavy when fully loaded, it is advised that at least two people remove the disk shelf.**

Removing a disk shelf from a loop

Removing a daisy-chained disk shelf

To remove a disk shelf from a loop of disk shelves, complete the following steps.

Step	Action	
1	Put on the antistatic wrist strap and grounding leash.	
2	**If the disk shelf connects to a...**	**Then...**
	Filer/FAS appliance	Shut down the filer/FAS appliance by entering the following command at the console: **`halt`** **Caution** Always use the `halt` command to perform a clean shutdown.
	NetCache appliance	1. From the NetCache Manager home page, select Maintenance tab > System Control > Halt/Reboot. 2. Select Halt NetCache.
3	Verify that the LCD display at the front of your storage appliance displays the following message: `Halted`	
4	**If the disk shelf has...**	**Then...**
	AC power supplies	Turn off the power switch on the disk shelf.
	DC power supplies	Turn off and unplug the cables from the power source.

Step	Action
5	Disconnect the two disk shelf power cords from the disk shelf that you are going to remove.
6	Disconnect the Fibre Channel cables connecting the disk shelf to the other disk shelves or the storage appliance.
7	Disconnect the grounding strap connecting the disk shelf to the other disk shelves or the storage appliance.
8	Use a Phillips screwdriver to remove the screws from the flanges of the disk shelf retention bracket.
9	With the help of another person, remove the disk shelf from the rack. **WARNING** **Because the disk shelf is very heavy when fully loaded, it is advised that at least two people remove the disk shelf.**

Replacing a disk in a disk shelf

Reasons to replace a disk

You can replace a disk in a disk shelf for any reason. However, the most common reason is disk failure. If a disk fails, the storage appliance logs a warning message to the system console indicating which disk on which loop failed.

Preparing to replace a disk

Before you replace a disk in a disk shelf, you must first check the disk shelf to ensure that after you remove the disk you still have enough disks installed to meet the enclosure services requirements. For information about these requirements, see "Drive bay requirements" on page 14.

About replacing a disk in a disk shelf

Replacing a disk in a disk shelf consists of the following procedures:

- "Removing a disk" on page 59
- "Installing a disk" on page 61

Removing a disk

To remove a disk, complete the following steps.

Step	Action	
1	**If the disk shelf connects to a...**	**Then...**
	Filer/FAS appliance	Enter one of the following commands, as appropriate: ◆ **`disk fail`** *disk_name* ◆ **`disk remove`** *disk_name* Either command causes the amber fault LED on the disk to illuminate. For more information about LEDs, see "Monitoring the DS14 Fibre Channel disk" on page 51. For more information about disk commands, see the Data ONTAP *System Administrator's Guide*.
	NetCache appliance	**1.** In the NetCache Manager utility, select Maintenance tab > Disk > Management. **2.** From the Disk Type column of the Disk Status table, identify the disk that you want to remove. **3.** Click Fail. **4.** Click Swap Drive. For more information about disk management, see the *NetCache Appliance System Administration Guide*.
2	Wait 30 seconds for the disk to stop spinning.	
3	Put on the antistatic wrist strap and grounding leash.	

Step	Action
4	To remove the disk, press down on its release mechanism with one hand while grasping the top flange of the disk shelf with the other hand. Gently slide the disk out of the disk shelf. **WARNING** **When removing a disk, always use two hands to support its weight.**

Installing a disk

To install a disk in a disk shelf, complete the following steps.

Step	Action
1	Put on the antistatic wrist strap and grounding leash.
2	Orient the device carrier so that the release mechanism is at the top.
3	Insert the device carrier into the guide slot in the disk shelf and firmly push it in until it engages the backplane and you see the release mechanism click into place. **Caution** Do not slam the device carrier into place.
4	Make sure that disks are installed in drive bays 0 and 1 for Enclosure Services to work.

Replacing a power supply in a disk shelf

About this section

Replacing a power supply in a disk shelf consists of the following procedures:

- "Removing a power supply" on page 62
- "Installing a power supply" on page 64

Rules for replacing power supplies

When replacing the power supply on your disk shelf, observe the following rules:

- You do not need to turn off the power when you replace one power supply.
- If you are replacing both power supplies in the same disk shelf, replace them one at a time to avoid powering down the disk shelf.

Removing a power supply

To remove a power supply, complete the following steps.

Step	Action	
1	Put on the antistatic wrist strap and grounding leash.	
2	**If you have a disk shelf with...**	**Then...**
	An AC power supply	**1.** Turn off the switch on the power supply that you are replacing. **2.** Lift up the clip lock and unplug the power cord from the storage appliance power supply.
	A DC power supply	**1.** Turn off and unplug the cable to the power supply you are replacing from the power source. **2.** Using a #2 Phillips screwdriver, remove and save the screws securing the connections to the power supply in the following order: ❖ For positive ground installations: first negative (–), then positive (+), then ground (⏚) ❖ For negative ground installations: first positive (+), then negative (–), then ground (⏚)

Step	Action	
3	**If the CAM mechanism on the power supply is...**	**Then...**
	In the middle of the rear of the unit	Using the thumb and index finger of both hands, press the CAM mechanism levers in the middle of the power supply to release it.

The following figure shows how to release the CAM mechanism.

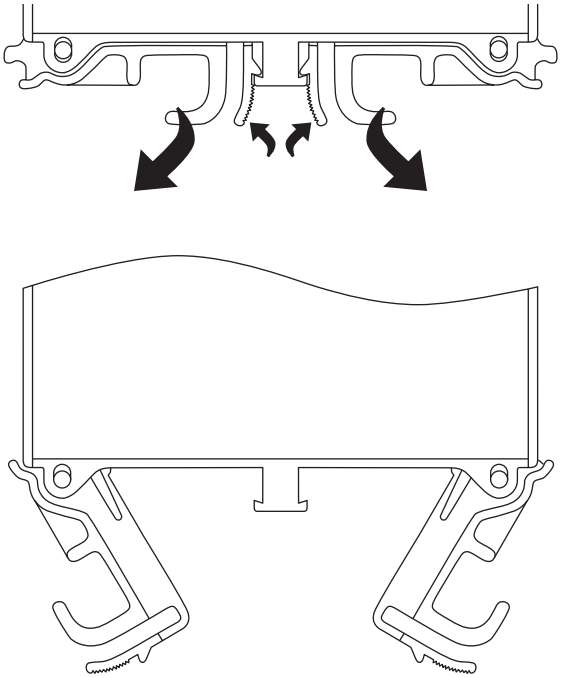

	At the top of the rear of the unit	Using your thumb and index finger, press the CAM mechanism levers toward each other to release the power supply handle.

The following figure shows how to press the levers on the CAM mechanism and release the power supply handle.

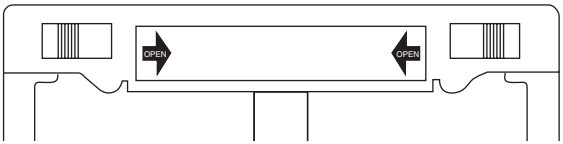

Step	Action
4	Use the handle to pull the power supply out of the disk shelf. **WARNING** **When removing a power supply, always use two hands to support its weight.**

Installing a power supply

To install a power supply in a disk shelf, complete the following steps.

Caution

Do not use excessive force when sliding the power supply into the disk shelf. You can damage the connector.

Step	Action	
1	Put on the antistatic wrist strap and grounding leash.	
2	**If the power supply CAM mechanism is...**	**Then slide the power supply in the power supply bay...**
	In the middle of the rear of the unit	And push the CAM mechanism levers into place.
	At the top of the rear of the unit	**1.** Until you hear the power supply connect with the connector inside the disk shelf chassis. **2.** Raise the handle and push it into place.

Step	Action	
3	The following figure shows how to raise the handle into place. 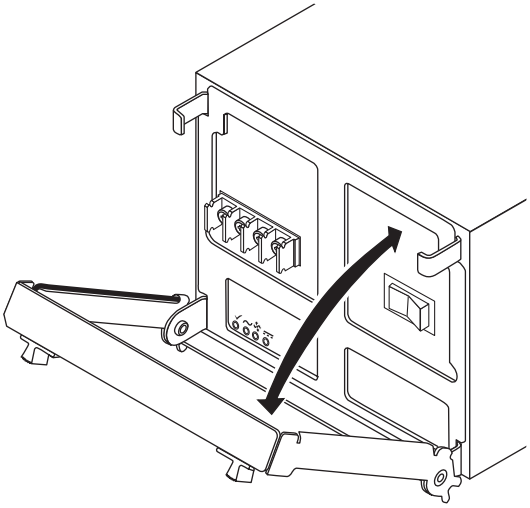	
4	**If the disk shelf has...**	**Then...**
	An AC power supply	**1.** Plug the power cord into the power receptacle and fasten it with the clamp. **2.** Plug the other end of the power cord into a grounded AC power source.
	A DC power supply	**1.** Connect the positive, negative, and ground wires to the power supply. **2.** Plug the other end of each power cord into a power source.
5	Turn on the power switch.	

Replacing an LRC

About the LRC

The LRC in a DS14 includes a SCSI-3 Enclosure Services Processor. It maintains the integrity of the loop when disks are swapped and provides signal retiming for enhanced loop stability. There are two LRCs in the middle of the rear of the disk shelf, one for Channel A and one for Channel B.

Note

The Input and Output ports on LRC B on the DS14 are inverted from LRC A.

The LRC has the following connectors.

LRC connector	Function
Input	Provides the interface between the disk shelf and the storage appliance.
Output	Provides the interface between two disk shelves to create a loop of daisy-chained disk shelves.

For detailed information

This section provides information about the following topics:

- "Removing an LRC" on page 67
- "Installing an LRC" on page 69
- "Hot-swapping an LRC" on page 70

Removing an LRC

Removing an LRC

To remove an LRC connected to the Fibre Channel loop, complete the following steps.

Step	Action	
1	Put on the antistatic wrist strap and grounding leash.	
2	**If the disk shelf connects to a...**	**Then...**
	Filer/FAS appliance	Shut down the filer/FAS appliance by entering the following command at the console: **`halt`** **Caution** Always use the `halt` command to perform a clean shutdown.
	NetCache appliance	**1.** From the NetCache Manager home page, select the Maintenance tab > System Control > Halt/Reboot. **2.** Select Halt NetCache.
3	Verify that the LCD display at the front of your storage appliance displays the following message: `Halted`	
4	**If the disk shelf has...**	**Then...**
	AC power supplies	Turn off the power switch on the storage appliance and disk shelves.
	DC power supplies	Turn off and unplug the cables from the power source.

Step	Action
5	Disconnect the LRC from the Fibre Channel cabling.
6	Using the thumb and index finger of both hands, press the levers on the CAM mechanism on the LRC to release it.
7	Pull the LRC out of the disk shelf.
8	Go to “Installing an LRC” on page 69.

Installing an LRC

Installing an LRC

To install an LRC, complete the following steps.

Step	Action
1	Put on the antistatic wrist strap and grounding leash.
2	Make sure that the power is off.
3	Push apart the levers on the CAM mechanism and slide the LRC into the slot at the rear of the disk shelf and push the levers of the CAM mechanism into place. **Caution** Do not use excessive force when sliding the LRC into the disk shelf; you might damage the connector.
4	Reconnect the Fibre Channel cabling.
5	Turn on the power to the disk shelves.
6	Reboot the storage appliance.

Hot-swapping an LRC

Assumptions about this procedure

The assumption about this procedure is that both LRCs on the DS14 are multipath connections to the storage appliance.

Caution

If you attempt to hot-swap the LRC on a disk shelf which does not have multipath connections, you will lose all access to the drives on this disk shelf as well as those below it.

Hot-swapping an LRC

To hot-swap an LRC, complete the following steps.

Step	Action
1	Put on the antistatic wrist strap and grounding leash.
2	From the console of the storage appliance, enter the following command to disable the loop in which the failed LRC is a connection: **`storage disable adaptername`** The *Data ONTAP System Administrator's Guide* (6.1 or later) provides more information about these commands.
3	Note the position of the terminate switch on the LRC you are removing and set the terminate switch on the replacement LRC to the same setting before inserting it into the disk shelf.
4	Disconnect the LRC that you are removing from the Fibre Channel cabling.
5	Using the thumb and index finger of both hands, press the levers on the CAM mechanism on the LRC to release it and pull it out of the disk shelf.

Step	Action
6	Slide the replacement LRC into the slot at the rear of the disk shelf and push the levers of the CAM mechanism into place. **Caution** Do not use excessive force when sliding the LRC into the disk shelf; you might damage the connector.
7	Reconnect the Fibre Channel cabling.
8	From the console of the filer, enter the following command to enable the loop in which the replacement LRC is a connection: `storage enable adaptername`

Adding a Disk Shelf to an Existing System A

About this appendix

This appendix discusses how to install a DS14 into an existing system.

Topics in this appendix

This appendix provides information about the following topics:

- "Installing a DS14 disk shelf in an existing mixed shelf loop" on page 74
- "Hot-adding a DS14 to an existing loop" on page 79

Installing a DS14 disk shelf in an existing mixed shelf loop

Assumptions about the existing mixed shelf loop

This section is based on the assumption that the last disk shelf in the existing mixed shelf loop connected to your storage appliance is not a DS14 disk shelf.

Note

If the last disk shelf in your storage appliance system is a DS14, you can add the DS14 disk shelf to the loop without shutting down the system. Go to "Hot-adding a DS14 to an existing loop" on page 79.

Installing a DS14 disk shelf in an existing mixed shelf loop

To install a DS14 disk shelf into an existing mixed shelf loop on a storage appliance, complete the following steps.

Caution

If you are installing the DS14 into a loop that contains FC7, FC8, or FC9 disk shelves, the DS14 must be the last disk shelf in the loop and must have the highest disk shelf ID in the loop to avoid address conflicts.

Step	Action	
1	Put on the antistatic wrist strap and grounding leash.	
2	**If the disk shelf connects to a...**	**Then...**
	Filer	Shut down the filer by entering the following command at the console: **`halt`** **Caution** Always use the `halt` command to perform a clean shutdown.
	NetCache appliance	**1.** From the NetCache Manager home page, select Maintenance tab > System Control > Halt/Reboot. **2.** Select Halt NetCache.

Step	Action	
3	Verify that the LCD display at the front of your storage appliance displays the following message: `Halted`	
4	Turn off the power to your storage appliance and the disk shelves.	
5	Install the DS14. Follow Step 2 through Step 6 of "Installing a DS14" on page 16.	
6	Ground the disk shelf using the provided grounding cable. Follow Step 4 and Step 5 of "Grounding connected disk shelves" on page 37.	
7	Connect the disk shelf to a power source. Follow Step 2 of "Connecting the disk shelf to power" on page 39.	
8	**If the last disk shelf in the loop to which you are adding the DS14 is...**	**Then...**
	An FC7 or FC8 disk shelf	**1.** Remove the terminator from the Output/Terminator connector. **2.** Go to Step 9.
	An FC9 disk shelf	Go to Step 9.
9	Connect one end of the provided cable to the Output/Terminator connector of the LRC A on the last disk shelf in the loop.	

Step	Action
10	Connect the other end of the cable to the LRC A Input on the DS14 disk shelf that you are adding. The following illustration shows a DS14 disk shelf installed above an FC9 disk shelf. 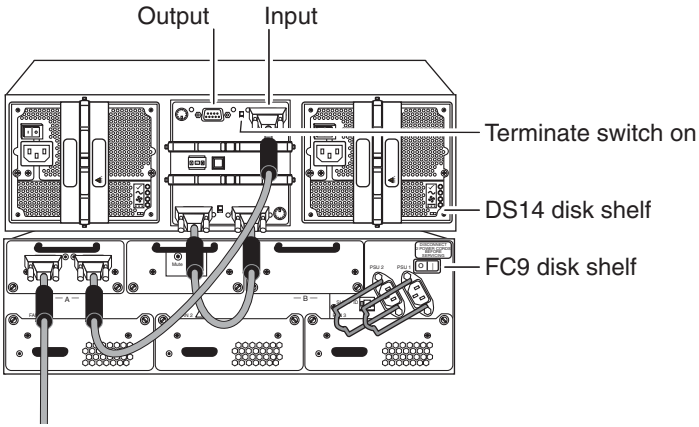

Step	Action	
11	**If the DS14 disk shelf...**	**Then...**
	Is the only disk shelf in the loop	**1.** Connect one end of the provided cable to the LRC B Input on the DS14. **2.** Connect the other end of the cable to the LRC B Output on the DS14. **3.** Turn the terminate switches on LRCs A and B to the On position. 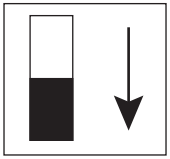 LRC A active terminate position **Note** Because LRC B on the DS14 disk shelf is inverted, the On terminate position on LRC B is up instead of down.
	Is the first of additional DS14 disk shelves being added to the loop	**1.** Turn the terminate switch on the first DS14 disk shelf in the mixed shelf loop to the Off position for LRC A (up) and LRC B (down). **2.** Connect one end of the provided cable to the LRC B Output on the first DS14 disk shelf in the mixed shelf loop. **3.** Connect the other end of the cable to the LRC B Input on the next DS14 disk shelf that you added to the mixed shelf loop.

Step	Action	
		4. Verify that the terminate switch on all but the last DS14 disk shelf is in the Off position for LRC A (up) and LRC B (down). The terminate switch on the last DS14 disk shelf should be in the On position for LRC A(down) and LRC B (up).
12	Give the disk shelf a unique disk shelf ID. See Step 5 of "Installing a DS14" on page 16 for specific instructions. **Note** A valid shelf ID ranges between 1 through 7. Network Appliance recommends using disk shelf ID 7 only if it is the last ID available. A shelf ID that is not from 1 through 7 causes the drive addresses to default to those of a shelf with the ID switch set to 7 even though the Shelf ID indicator in the front operation panel will display a dash (-).	
13	Turn on the power first to the disk shelves and then to the storage appliance.	
14	Reboot the storage appliance.	

Hot-adding a DS14 to an existing loop

About this section

This section provides information about how to hot-add a DS14 to an existing loop. It also tabulates the error messages that appear on your storage appliance console if the attempt at hot-adding was unsuccessful.

Requirements for hot-adding

To hot-add a DS14 to an existing loop, the following requirements must be met.

You are hot-adding a...	Your existing loop must...
DS14	Have a DS14 disk shelf as the last shelf

Hot-adding a DS14 to an existing loop

To hot-add a DS14 to an existing loop on a storage appliance, complete the following steps.

Step	Action
1	Put on the antistatic wrist strap and grounding leash.
2	Install the disk shelf. Follow Step 2 through Step 6 of "Installing a DS14" on page 16.
3	Ground the disk shelf using the provided grounding cable. Follow Step 4 and Step 5 of "Grounding connected disk shelves" on page 37.
4	Connect the disk shelf to a power source by following Step 2 of "Connecting the disk shelf to power" on page 39. **Caution** Do not turn on the power to the DS14 yet.
5	Give the disk shelf a unique disk shelf ID. See Step 5 of "Installing a DS14" on page 16 for specific instructions. **Note** Only use disk shelf ID 7 if it is the last ID available.

Step	Action
6	Verify that the disk shelf ID is not being used in the loop by entering the following command at the console: **`fcstat device_map`** ***`adaptername`*** **Caution** An invalid disk shelf ID causes the storage appliance to panic.
7	Turn on the power to the disk shelf.
8	Connect one end of the provided cable to the LRC A Output on the last DS14 disk shelf in the existing loop.
9	Connect the other end of the cable to the LRC A Input on the new DS14 disk shelf.
10	Connect one end of the provided cable to the LRC B Output on the last DS14 disk shelf in the existing loop.
11	Connect the other end of the cable to the LRC B Input on the new DS14 disk shelf.
12	Verify that all the cables are securely fastened. **Caution** Poorly secured cables cause the storage appliance to panic over an open loop.
13	Turn the terminate switch of the newly added DS14 disk shelf to the On position for LRC A (down) and LRC B (up). **Caution** Failure to place the terminate switches in the On position cause the storage appliance to panic over an open loop.
14	Turn the terminate switch of the now second-to-last DS14 to the Off position for LRC A (up) and LRC B (down). In 60 seconds, the storage appliance recognizes the hot-added disk shelf.

Error messages

The following error messages appear on your storage appliance console if your attempt at hot-adding the DS14 is unsuccessful.

Error message	Explanation
`Open loop panic`	The terminate switch on LRC A and LRCB on the new DS14 disk shelf are not in the On position.
`Open loop panic`	The shelf-to-shelf cable between the now second-to-last DS14 disk shelf and the newly added DS14 disk shelf is defective or is not securely fastened.
`Soft address panic`	One of two reasons cause this error message to appear: ◆ There is an invalid disk shelf ID. ◆ The power was turned on before the disk shelf ID was changed and the disk shelf was not power-cycled after the disk shelf ID was changed.

Recommended Power Line Sizes

B

About this appendix

This appendix describes how to determine the power line lengths running from the storage appliance to the power source.

Topics in this appendix

This appendix discusses the following information:

- "Recommended AC power line sizes" on page 84
- "Calculating the length of DC wires" on page 85

Recommended AC power line sizes

About AC power feeds

Longer AC power feeds need to be properly designed to preserve voltage levels to the equipment. The wiring from the breaker panel to the power strip, which supplies power to the storage appliance and disk shelves, can often exceed 50 feet.

Note

Total AC wire length = breaker to wall or ceiling outlet + extension cable or ceiling drop.

The following table lists the recommended conductor size for 2% voltage drop for a particular distance in feet (taken from the Radio Engineer's Handbook).

110V, single-phase	**20A circuit**	**30A circuit**	**40A circuit**	**50A circuit**
25 feet	12 AWG	10 AWG	8 AWG	8 AWG
50 feet	8 AWG	6 AWG	6 AWG	4 AWG
75 feet	6 AWG	4 AWG	4 AWG	2 AWG

220V, single-phase	**20A circuit**	**30A circuit**	**40A circuit**	**50A circuit**
25 feet	14 AWG	12 AWG	12 AWG	10 AWG
50 feet	12 AWG	10 AWG	8 AWG	8 AWG
75 feet	10 AWG	8 AWG	6 AWG	6 AWG

The following table list the approximate equivalent wire gauge (American Wire Gauge (AWG) to Harmonized Cordage).

AWG	8	10	12
Harmonized, mm-mm[1]	4.0	2.5	1.5

1. mm-mm = millimeter squared

Calculating the length of DC wires

Use these variable definitions

To calculate the maximum combined length of the positive and negative wires between the DC source and DC power supplies, use the following variable definitions:

- V_{SOURCE} — Voltage across the internal source resistance
- V_{OC} — Voltage across an open circuit of the input source
- V_{LOAD} — Voltage across a load, R_{TEST}, connected to the input source
- R_{TEST} — Test resistor of known value, that is, 10Ω at 300W
- R_{CABLE} — DC resistance of the cable at a given length
- R_{SOURCE} — DC resistance of the source
- R_{TOTAL} — Combined DC resistance of the cable and DC source:

  $$R_{TOTAL} = R_{SOURCE} + R_{CABLE}$$
- $V = IR$ — Ohm's Law
- $V_{OC} = V_{SOURCE} + V_{LOAD}$ — Kirchoff's Voltage Law

How to calculate the length

The following two examples show how to calculate the maximum combined length of the positive and negative wires that connect the DC power supply to the DC source.

Example 1: This example uses the following given values.

Given

V_{DROP}	=	2V	Maximum voltage drop through input source and cable
V_{MIN}	=	40V	Minimum input voltage
I_{MAX}	=	8.6V	Maximum input current at 40V
V_{OC}	=	48V	Measured
V_{LOAD}	=	47.5V	Measured
R_{TEST}	=	10Ω	(300W)

Solution

$$V_{DROP} = I_{MAX}R_{TOTAL}$$

$$2 = 8.6\ R_{TOTAL}$$

$$R_{TOTAL} = 2/8.6$$

$$R_{TOTAL} = .233\Omega$$

$$V_{LOAD} = I\ \ R_{TEST}$$

$$I = V_{LOAD}/R_{TEST}$$

$$V_{OC} = V_{SOURCE} + V_{LOAD}$$

$$V_{OC} = IR_S + V_{LOAD}$$

$$R_S = \frac{V_{OC} - V_{LOAD}}{I}$$

$$R_S = \frac{(V_{OC} - V_{LOAD})}{V_{LOAD}/R_{TEST}}$$

$$R_S = \frac{V_{OC} - V_{LOAD}}{V_{LOAD}} \times R_{TEST}$$

$$= \frac{48V - 47.5V}{47.5V} \times 10\Omega$$

$$= 0.105\Omega$$

$$R_{TOTAL} = R_{CABLE} + R_{SOURCE}$$

$$R_{CABLE} = R_{TOTAL} - R_{SOURCE}$$

$$R_{CABLE} = 0.233\Omega - 0.105\Omega$$

$$= 0.128\Omega$$

For example, if you have a 12 gauge wire, solid strand, at room temperature, use the following calculation.

$$\text{Total cable length} = \frac{R_{CABLE}}{\text{DC resis.}^{1}}$$

$$\text{Total cable length} = \frac{.128\Omega}{.0017\Omega/\text{ft}} = 75 \text{ ft}$$

AWG	Strand	DC resistance[1] [Ω/ft.]		Total cable length[2] [ft]	
		25° C	75° C	25° C	75° C
12	Solid	.0017	.0020	75	64
12	7/20	.0015	.0018	85	71
12	19/25	.0017	.0020	75	64
12	65/30	.0018	.0022	71	58
12	165/34	.0016	.0019	80	67

1. Data from Alpha Wire, wire manufacturer
2. Combined positive and negative run

Example 2: This example uses the following given values.

Given

V_{DROP} = 2V — Maximum voltage drop through input source and cable

V_{MIN} = 40V — Minimum input voltage

I_{MAX} = 8.6V — Maximum input current at 40V

$R_{SOURCE} \cong 0$

Solution

$$V_{DROP} = I_{MAX}R_{TOTAL}$$

$$R_{TOTAL} = \frac{V_{DROP}}{I_{MAX}}$$

$$R_{TOTAL} = 2/8.6$$

$$R_{TOTAL} = 0.233\Omega$$

$$R_{TOTAL} = R_{SOURCE} + R_{CABLE}$$

$$R_{CABLE} = R_{TOTAL} - R_{SOURCE}$$

$$R_{CABLE} = 0.233 - 0$$

$$R_{CABLE} = 0.233$$

For example, if you have a solid strand 12 gauge wire at room temperature, use the following calculation.

$$\text{Total cable length} = \frac{R_{CABLE}}{\text{DC resis.}^{1}}$$

$$\text{Total cable length} = \frac{.233\Omega}{.0017\Omega/\text{ft}} = 136 \text{ ft}$$

AWG	Strand	DC resistance[1] [Ω/ft.]		Total cable length[2] [ft]	
		25° C	75° C	25° C	75° C
12	Solid	.0017	.0020	136	116
12	7/20	.0015	.0018	155	129
12	19/25	.0017	.0020	136	116
12	65/30	.0018	.0022	129	105
12	165/34	.0016	.0019	145	122

1. Data from Alpha Wire, wire manufacturer.
2. Combined positive and negative run

About using other wire sizes

If you need a longer run for your combined positive and negative DC wires, choose a wire with a lower resistance and calculate the total cable length. For example, a solid #10 AWG has a lower DC resistance than a solid #12 AWG.

Communications Regulations C

About this appendix This appendix lists the regulatory notices you need to be aware of when installing and operating your Network Appliance equipment.

Regulatory notices

FCC notices (U.S. only)

Network Appliance devices are designed for a CFR 47 (Code Federal Regulations) Part 15 Class A environment.

The FCC and Network Appliance guarantee the user's rights to operate this equipment only if the user complies with the following rules and regulations:

- Install and operate this equipment in accordance with the specifications and instructions in this guide.
- Modify this equipment only in the ways specified by Network Appliance.
- Use shielded cables with metallic RFI/EMI connector hoods to maintain compliance with applicable emissions standards.
- If the system has nine or more Fibre Channel disk shelves, install the system in two or three NetApp System Cabinets to maintain performance within Part 15 of CFR 47 regulations.

Compliance with Part 15 of CFR 47

This equipment has been tested and found compliant with Part 15 of the CFR 47 rules for Class A digital devices. These rules are designed to provide reasonable protection from interference to electronics equipment operated in a commercial environment.

Operation of this device is subject to the following two conditions:

- This device cannot cause harmful interference.
- This device must accept any interference received, including interference that may cause undesired operation.

Compliance with ICES-003

This Class A digital apparatus complies with Canadian ICES-003.

Cet appareil numérique de la classe A conforme à la norme NMB-003 du Canada.

Compliance with EN regulations

Marking by the symbol CE indicates compliance of this Network Appliance device to the EMC Directive and the Low Voltage Directive of the European Union. Such marking is indicative that this Network Appliance device meets the technical standards listed in "Declaration of Conformity," later in this appendix.

Caution

This is a Class A product. In a domestic environment this product may cause radio interference, in which case the user may be required to take adequate measures.

Bureau of Standards, Metrology, and Inspections notice (BSMI, Taiwan only)

警告使用者:

這是甲類的資訊產品, 在居住的環境中使用時,可能會造成射頻干擾, 在這種情況下, 使用者會被要求采取某些適當的對策.

Translation of the BSMI notice:

Warning: This is a Class A product. In a domestic environment this product may cause radio interference, in which case the user may be required to take adequate measures.

Voluntary Control Council for Interference by Information Technology Equipment (VCCI, Japan)

この装置は、情報処理装置等電波障害自主規制協議会（ＶＣＣＩ）の基準に基づくクラスＡ情報技術装置です。この装置を家庭環境で使用すると電波妨害を引き起こすことがあります。この場合には使用者が適切な対策を講ずるよう要求されることがあります。

Translation of the VCCI-A notice:

This is a Class A product based on the standard of the Voluntary Control Council for Interference by Information Technology Equipment (VCCI). If this equipment is used in a domestic environment, radio disturbance may arise. If such trouble occurs, the user may be required to take corrective actions.

Declaration of Conformity

Declaration of Conformity

Network Appliance, Inc.
495 East Java Drive
Sunnyvale, CA 94089, U.S.A,

declare under our sole responsibility that the products

Type of equipment	Description	Model number	Year of manufacture
Disk drive storage shelf	Fibre Channel disk shelf	DS14	2001

to which this declaration relates conform to the following standards:

EN 60950:1992, Information Technology Equipment (Safety)
EN 55022:1987, Emissions Requirements for Information Technology Equipment
EN 55024:1988, Information Technology Equipment, Immunity Characteristics

following the provisions of the directives listed below:

73/23/EEC, ‘Low Voltage Directive’ (Product Safety)
89/336/EEC, Electromagnetic Compatibility Directive

Part number: 210-02616

Index

A

AC power line sizes 84
AC power supplies
    connecting disk shelf to 39
antistatic wrist strap 5
audience v

C

cabling
    multiloop, with multipath 35
    multiloop, without multipath 31
    multipath, without multiloop 34
command
    fcstat device_map 80
    halt 55, 57, 67, 74
    storage disable 70
    storage enable 71
conditions
    operating 3
    storage 3
connections of
    a second or third loop 31
    disk shelf to AC power 39
    disk shelf to DC power 40
    disk shelf to power source 39
    disk shelves to a storage appliance 24
    grounded disk shelves to a storage appliance 37
console error messages
    Alarm Element 1 44
    Cooling element Element 1 50
    Cooling element Element 2 50
    Display Element 1 45
    front operation panel 44
    Open loop panic 81
    power supply 50
    Power supply Element 1 50
    Power supply Element 2 50
    SES electronics Element 1 47
    SES electronics Element 2 48
    Soft address panic 81
    Temperature sensor Element 1 44
    Temperature sensor Element 2 47
    Temperature sensor Element 3 47
conventions
    command v
    formatting vi
    keyboard vi

D

DC power supplies
    about 39
    connecting disk shelf to 39
DC wires, calculating the length of 85
device carrier v
disk drive compatibility 14
disk shelves v
    DC 39
disks
    interpreting LEDs 51
    location of LEDs 51
drive bay requirements 14
DS14
    installing in a mixed-shelf loop 74

E

electrical requirements 3
element 47
empty drive shuttles, for empty drive bays 8
Enclosure Services, drive bays required for 14
environmental requirements 2

F

FC-AL filer-to-shelf cable 26
Fibre Channel Arbitrated Loop (FC-AL)
    adapter 25, 31
front operation panel
    console error messages 44
    interpreting LEDs 43, 49
    location of LEDs 42
    monitoring the disk shelf ID 42

front operation panel error messages
Alarm Element 1 44
Display Element 1 45
Temperature sensor Element 1 44

G

ground
connecting disk shelves to a storage appliance 37

H

hot-adding error message
Open loop panic 81
Soft address panic 81
hot-swap of LRC/ESH module 70
humidity, environmental requirements 3

I

IDs, disk shelf 12
installation
before you begin 12
preparing for 6
site requirements for 1
tools 5
installation of
power supply 64

L

LED interpretation
disks 51
front operation panel 43, 49
LRC module 47
power supply 50
LED locations
disks 51
front operation panel 42
power supply 49
loops, defined v
LRC error messages
SES electronics Element 1 47
SES electronics Element 2 48
Temperature sensor Element 2 47
Temperature sensor Element 3 47
LRC module v
interpreting LEDs 47
LRC/ESH module
hot-swapping 70

M

mixed-shelf loop
assumptions about 74
installing a DS14 to 74
module
LRC v
mounting kit options
center-of-gravity kit 7
four-post rail kit 7
two-post telco tray kit 7
multiloop file/NetCache appliance
requirements for 31
multiloop storage appliance v
adding a loop to 31
multiple disk shelves, connecting 29

O

Operating conditions
relative humidity 3
temperature range 3

P

power
brownouts 4
connecting disk shelves to 39
consumption 4
grounded electrical outlet 39, 65
requirements 4
power supplies
about 39
about DC 39
installing in a disk shelf 64
interpreting LEDs 50
location of LEDs 49
power cord with 65
power switch for 65
ratings of 4

removing from a disk shelf 62
replacing 62
power supply error messages
Cooling element Element 1 50
Cooling element Element 2 50
Power supply Element 1 50
Power supply Element 2 50

R

relative humidity, operating conditions 3
removal of
disk shelf 55
disk shelf from daisy-chain 57
power supply 62
replacement of
power supply 62
requirements
drive bay 14
electrical 3
environmental 2
for connecting additional loops 31
power 4
rules
for drive bays 14
for installing disk shelves 8

S

shipment contents
center-of-gravity kit 7
disk shelf 7
FC-AL cables 7
four-post rail kit 7
grounding copper braid 7
ID labels for the disk shelves 7
mounting kit 7
two-post telco tray kit 7
single disk shelf, connecting 25
special messages vii
storage appliance, multiloop v

T

temperature range, operating conditions 3
terminology v
thermal rating 4