SpinServer® 3300
Installation Guide

Network Appliance, Inc.
495 East Java Drive
Sunnyvale, CA 94089 USA
Telephone: +1 (408) 822-6000
Fax: +1 (408) 822-4501
Support telephone: +1 (888) 4-NETAPP
Documentation comments: doccomments@netapp.com
Information Web: http://www.netapp.com

Part number 215-00927
April 2004

Copyright and trademark information

Copyright information

Copyright © 2004 Network Appliance, Inc.; copyright © 2002-2004 Spinnaker Networks, LLC. All rights reserved. Specifications subject to change without notice.

No part of this book covered by copyright may be reproduced in any form or by any means—graphic, electronic, or mechanical, including photocopying, recording, taping, or storage in an electronic retrieval system—without prior written permission of the copyright owner.

Network Appliance reserves the right to change any products described herein at any time, and without notice. Network Appliance assumes no responsibility or liability arising from the use of products described herein, except as expressly agreed to in writing by Network Appliance. The use or purchase of this product does not convey a license under any patent rights, trademark rights, or any other intellectual property rights of Network Appliance.

The product described in this manual may be protected by one or more U.S. patents, foreign patents, or pending applications.

RESTRICTED RIGHTS LEGEND: Use, duplication, or disclosure by the government is subject to restrictions as set forth in subparagraph (c)(1)(ii) of the Rights in Technical Data and Computer Software clause at DFARS 252.277-7103 (October 1988) and FAR 52-227-19 (June 1987).

Trademark information

NetApp and the Network Appliance design are registered trademarks of Network Appliance, Inc. in the United States, Canada, and the European Union. Network Appliance is a registered trademark of Network Appliance, Inc. in Monaco and a trademark of Network Appliance, Inc. in the United States and Canada. FAServer is a registered trademark of Network Appliance, Inc. in the United States and the European Union. NetCache is a registered trademark of Network Appliance, Inc. in the United States, Canada, the European Union, and Japan. SnapCopy is a registered trademark of Network Appliance, Inc. in the European Union and a trademark of Network Appliance, Inc. in the United States. WAFL is a registered trademark of Network Appliance, Inc. in the United States, the European Union, and Canada. DataFabric, FilerView, NearStore, SecureShare, SnapManager, SnapMirror, and SnapRestore are registered trademarks of Network Appliance, Inc. in the United States. Data ONTAP is a trademark of Network Appliance, Inc. in the United States and Canada. Snapshot is a trademark of Network Appliance, Inc. in the United States and the European Union. NetApp—the Network Appliance Company is a registered trademark of Network Appliance, Inc. in the United States and other countries. ApplianceWatch, BareMetal, Center-to-Edge, ContentDirector, gFiler, MultiStore, SecureAdmin, Serving Data by Design, Smart SAN, SnapCache, SnapDrive, SnapVault, vFiler, and Web Filer are trademarks of Network Appliance, Inc. in the United States. Spinnaker Networks, the Spinnaker Networks logo, SpinAccess, SpinCluster, SpinFS, SpinHA, SpinMove, SpinServer, and SpinStor are registered trademarks of Spinnaker Networks, LLC in the United States, other countries, or both. SpinAV, SpinManager, SpinMirror, and SpinShot are trademarks of Spinnaker Networks, LLC in the United States, other countries, or both.

Network Appliance is a licensee of the CompactFlash and CF Logo trademarks.

All other brands or products are trademarks or registered trademarks of their respective holders and should be treated as such.

SpinServer 3300 Installation Guide

1.0 About This Guide 1
1.1 Typographical Conventions 1
1.2 Statements of Warning 2
1.3 Organization of the Guide 2

Part I: Introduction 3

2.0 Introduction 5
2.1 SpinServer 5
SpinServer 6
SpinStor 7
2.2 SpinServer Software 8
SpinFS Basic Software Package 8
SpinServer Optional Software Packages 9
2.3 SpinServer Documentation 9

Part II: Product Specifications and Safety Warnings 11

3.0 Product Specifications and Requirements 13
3.1 General Product Specifications 13
Product Tempering 13
Floor Space Requirements 13
3.2 SpinServer and SpinStor Port Interface Specifications 14
3.3 Dimensions and Environmental Specifications for the SpinServer 14
Physical Dimensions for the SpinServer 14
Power Specifications for the SpinServer 15
Equipment Environmental Requirements for the SpinServer 15
3.4 Dimensions and Environmental Specifications for the SpinStor 15
Physical Dimensions for the SpinStor RAID and JBOD 16
Power Specifications for SpinStor RAID and JBOD 16
Equipment Environment Requirements for the SpinStor RAID and JBOD 17
3.5 Dimensions and Environmental Specifications for the 120-Volt UPS 18
Physical Dimensions for the 120-Volt UPS 18
Power Specifications for the 120-Volt UPS 18
Environmental Requirements for the 120-Volt UPS 19
3.6 Dimensions and Environmental Specifications for the 208-Volt UPS 19
Physical Dimensions for the 208-Volt UPS 19
Power Specifications for the 208-Volt UPS 20
Environmental Requirements for the 208-Volt UPS 20
3.7 Hardware and Software Requirements 21
Hardware Requirements 21
Software Requirements 23
3.8 Tested Equipment 25

3.9 Certifications, Partnerships, and Memberships 26
Certifications 26
Partnerships 26

4.0 Preinstallation Tasks 29
4.1 Before You Begin 29
IP Addresses 29
Naming Conventions 29
4.2 Storage System Components 30
4.3 Designing Storage System Topologies 30
SpinServer Configuration 30
SpinStor RAID Configuration 32
SpinStor JBOD Configuration 33
High Availability Configurations 34
4.4 Designing Topologies for Expandability 38
Assigning IDs to SpinServer System Components 39
Expanding the Topology 39
4.5 Unpacking and Handling Components 41
4.6 Product Guidelines 42
Static Electrical Discharge Precautions 42
Laser Radiation Precautions 42
Electrical Precautions 43
Electrical Warnings 43
SpinServer System Precautions 46
SpinServer System Warnings 46
Rack Precautions and Warnings 47

Part III: Hardware Installation 49

5.0 Setting Up the Rack 51
5.1 Equipment Racks 51
Spinnaker Racks 51
Non-Spinnaker Racks 53
5.2 Designing the Rack Layout 53
Unit Size 53
Rack-Mounting Templates 54
Single Rack Layout 54
Multiple Rack Layout 54
Rack Voltage 54
Rack PDUs 55
SpinServer Components in the Rack Layout Design 55
Layout Examples 59
5.3 Setting Up a Spinnaker Rack 62
Unpacking the Rack 63
Removing Rack Doors 63
Removing Side Panels 64
Removing Stabilizing Plates 65
Removing the Rack from the Pallet 66
Adjusting the Position of the Vertical Rack Rails 68
Marking the Positions of SpinServer Components 68
5.4 Replacing Rack Side Panels 69
5.5 Replacing Rack Doors 69

5.6 Attaching Anti-Tip Plates 70
5.7 Moving Rack to Permanent Location 71

6.0 Installing the UPS 73
6.1 Installing the UPS in the Rack 73
Reviewing Rack Layout Design 74
UPS Installation in the Rack 74

7.0 Installing the SpinServer 75
7.1 Installing the SpinServer in the Rack 77
Reviewing the Rack Layout Design 77
SpinServer Installation Kit 77
SpinServer Installation in a Square Hole Rack Using Fastenerless Slide 79
SpinServer Installation in a Threaded-Hole Rack Using Universal Slides 83

8.0 Installing the SpinStor 87
8.1 Installing the SpinStor in the Rack 89
Reviewing the Rack Layout Design 89
SpinStor Installation Kit 89
SpinStor Installation in a Square-Hole Rack 91
SpinStor Installation in a Threaded-Hole Rack 93
Inserting the Disk Drive Carriers 96

9.0 Setting Disk IDs and Installing Cables 97
9.1 SpinServer Ports and Connectors 97
9.2 SpinStor RAID LEDs and Connectors 98
9.3 SpinStor JBOD LEDs and Connectors 98
9.4 Setting Disk IDs 99
SpinStor RAID 99
SpinStor JBOD 99
9.5 Connecting UPS Management Cable 100
9.6 Connecting Fibre Channel Cables 101
Dual Loops 102
Optical Fiber Fibre Channel Cables 102
Copper Fibre Channel Cables 103
9.7 Connecting Ethernet Cables 103
9.8 Connecting the SpinStor RAID to the SpinStor JBOD 104
9.9 Connecting the Console 106
9.10 SpinServer System Physical Connections 107

10.0 Clustering and HA Connections 109
10.1 Single Server System 109
Connections for the Single Server System 110
10.2 Clustered System 110
Connections for the Clustered System 111
10.3 High Availability Systems 111
Connections for the High Availability Systems 111

11.0 Power Connections 115
11.1 Rack Power Specifications 115
11.2 Power Configuration Examples 116

Power Configuration for a Single Server in a 120VAC System 116
Power Configuration for Dual Servers in a 208VAC System 118
Illustration for Dual Servers in a 208VAC System 121

12.0 Powering Up the System 123
12.1 Checking the Equipment 123
SpinServer 123
SpinStor RAID and JBOD 123
12.2 Powering Up the SpinServer System 123
UPS 124
SpinStor JBOD 124
SpinStor RAID 125
Backup Equipment 126
SpinServer 127

13.0 Powering Down the System 129
13.1 Stopping the SpinServer System 129

Part IV: Troubleshooting 133

14.0 Troubleshooting 135
14.1 SpinServer Front Panel Switches and LEDs 135
SpinServer Front Panel LEDs 135
SpinServer Front Panel Switches 137
14.2 Additional LEDs on the SpinServer 137
SpinServer SCSI Drive Carrier LEDs 137
SpinServer Power Supply LEDs 138
14.3 SpinStor LEDs and Fault Indicators 139
SpinStor Front Panel LEDs 139
SpinStor Fault Indicators 141
14.4 Power Connection Troubleshooting 144
Power Cord Connections 144
Circuit Breakers 146
14.5 Disk Enclosure Troubleshooting 146
System Communication 146
Disk Drive I/O Modules 147
Disk Drive Enclosures 147
Replacing Expansion JBOD or RAID Blowers 147
Debugging RAID Subsystem Configuration 148

15.0 Disk ID Settings 149

16.0 Technical Assistance Center 153
16.1 Contacting Technical Support 153
16.2 SpinServer Information 153

Part V: Appendixes and Notices 155

17.0 Appendix A: EMC Statements 157
17.1 FCC Class A 157
17.2 ICES-003 Class A 157

18.0 Appendix B: Regulatory Compliance Review 159
18.1 Regulatory Summary for the SpinServer..... 159
18.2 Regulatory Summary for the SpinStor RAID and SpinStor JBOD..... 160
18.3 EU Declarations of Conformity..... 161
SpinServer EU Declaration of Conformity..... 161
SpinStor EU Declarations of Conformity 162
18.4 Emissions Statements for the SpinServer and the SpinStor 164
FCC Class A..... 164
ICES-003 Class A 165
18.5 Class 1 Laser Statement for the SpinServer and the SpinStor..... 165

19.0 Appendix C: Third Party License 167
19.1 Apache Software License 167
19.2 Kerberos Software License..... 168
19.3 Kerberos V5 License 169
19.4 The OpenLDAP Public License 169
19.5 Westhawk SNMP License 170
19.6 Net-SNMP License..... 171
Part 1: CMU/UCD copyright notice: (BSD like)..... 171
Part 2: Networks Associates Technology, Inc copyright notice (BSD)..... 172
Part 3: Cambridge Broadband Ltd. copyright notice (BSD)..... 172
Part 4: Sun Microsystems, Inc. copyright notice (BSD)..... 173
19.7 GNU Lesser General Public License..... 174
19.8 GNU General Public License 182

20.0 Glossary 189

List of Figures

Figure 2-1. SpinServer 3300 6
Figure 2-2. The front view of the SpinStor RAID or JBOD disk enclosure 7
Figure 4-1. Single SpinServer topology 31
Figure 4-2. Cluster with two nodes 32
Figure 4-3. RAID connections to other system components 32
Figure 4-4. Server-to-RAID connections and the interconnections among three RAID and four attached JBOD enclosures 33
Figure 4-5. JBOD connections to other system components 33
Figure 4-6. JBOD-to-RAID enclosure connections 34
Figure 4-7. High availability with two SpinServers and one SpinStor RAID disk enclosure 35
Figure 4-8. High availability with two SpinServers and two SpinStor RAID disk enclosures 36
Figure 4-9. High availability with two SpinServers and two SpinStor RAID disk enclosures 37
Figure 4-10. High availability with two SpinServers and four SpinStor RAID disk enclosures 38
Figure 4-11. Assigning IDs to the SpinServer system components in the topology design. 39
Figure 4-12. Expanding the topology to include an additional SpinServer and two additional SpinStor RAID enclosures 41
Figure 4-13. A single rack installation requires the attachment of the anti-tip plate 47
Figure 5-1. A Spinnaker rack with functional and safety features 52
Figure 5-2. This illustration demonstrates the relationship between rack units (U) and inches or centimeters. 53
Figure 5-3. Spinnaker rack with PDUs 55
Figure 5-4. The SpinServer requires 4U of vertical rack space. 56
Figure 5-5. The disk enclosure requires 3U of vertical rack space. 57
Figure 5-6. The UPS is placed at the bottom of the rack. The 120-volt UPS requires 2U of vertical rack space. . 58
Figure 5-7. The UPS is placed at the bottom of the rack. The 208-volt UPS requires 3U of vertical rack space. . 58
Figure 5-8. A recommended rack layout design with 120-volt UPSs 59
Figure 5-9. A recommended rack layout design with 208-volt UPSs 60
Figure 5-10. Another recommended rack layout design with 120-volt UPSs 61
Figure 5-11. Another recommended rack layout design with 208-volt UPSs 62
Figure 5-12. This illustration demonstrates the rotating handle on the doors of Spinnaker racks. 63
Figure 5-13. Lift the door up and away from the hinge pins. 64
Figure 5-14. To remove the side panels of the Spinnaker racks, grasp the top of the panel and pull it away from the rack. 65
Figure 5-15. Remove the stabilizing plates from the rack. 66
Figure 5-16. Remove the pallet brackets. 67
Figure 5-17. Lift the rack off the pallet and move the rack to the work area. 67
Figure 5-18. To replace the side panels on the Spinnaker racks, set the bottom of the panel onto the rack and push the top of the panel toward the rack. 69
Figure 5-19. Position the door over the three hinge pins and pull down to seat the door on the hinges. 70
Figure 5-20. Proper anti-tip plate placement 71
Figure 7-1. Fastenerless slide assembly. 77
Figure 7-2. Universal slide assembly 78
Figure 7-3. Insert the hooking tabs into the rack holes. 79
Figure 7-4. Align the lines on the blue safety latch and the slide assembly. 80
Figure 7-5. Cage nut installation 80

Figure 7-6. Secure the slide assembly to the rack with the #10-32 truss head screws. 81
Figure 7-7. The extended inner slide 81
Figure 7-8. Depress the white tab. 82
Figure 7-9. The inner slide is locked in place on the SpinServer with the locking tab. 82
Figure 7-10. The inner slide is inserted into the slide assembly in the rack. 82
Figure 7-11. Depress the white tab. 83
Figure 7-12. Universal slide assembly 84
Figure 7-13. Fasten the slides to the front of the rack. 84
Figure 7-14. Fasten the slides to the back of the rack with the washers and the screws. 85
Figure 7-15. Pull the inner slide out to the fully extended position. 85
Figure 7-16. Use the inner locking tab to free the inner sliding rail. 86
Figure 7-17. The inner slide is attached by using pan head screws. 86
Figure 7-18. The inner slide is inserted into the slide assembly in the rack. 86
Figure 8-1. The assembled shelf and bracket 91
Figure 8-2. Adjust the extension brackets to match the correct length for the depth of the rack. 91
Figure 8-3. Attach the mounting plates and shelf to the vertical rack rails 92
Figure 8-4. The tight fit of the disk enclosure in the rack requires you to smoothly push it into the rack. 92
Figure 8-5. Place the end cap over the ball studs and press firmly in place. 93
Figure 8-6. The assembled shelves and brackets 93
Figure 8-7. Adjust the extension brackets to match the correct length for the depth of the rack. 94
Figure 8-8. Attach the mounting plates and shelf to the vertical rack rails (front view). 94
Figure 8-9. The tight fit of the disk enclosure in the rack requires you to smoothly push it into the rack. 95
Figure 8-10. Place the end cap over the ball studs and press firmly in place. 95
Figure 8-11. Insert the carriers into the disk enclosure. 96
Figure 9-1. SpinServer ports and connectors. 97
Figure 9-2. RAID LEDs and connectors. 98
Figure 9-3. SpinStor JBOD LEDs and connectors. 98
Figure 9-4. Illustration of MSB and LSB switches on the SpinStor JBOD 99
Figure 9-5. Rear view of the 120-volt UPS 101
Figure 9-6. Rear view of the 208-volt UPS 101
Figure 9-7. The Fibre Channel cable is attached to the SpinServer and to the RAID enclosure. 102
Figure 9-8. The Ethernet cable is attached to the enclosure and to the Ethernet switch. 103
Figure 9-9. The Ethernet cable is attached to one SpinServer, to the Ethernet switch, and to the second SpinServer for clustering. 104
Figure 9-10. The SpinStor RAID disk ports. 105
Figure 9-11. The SpinStor JBOD disk ports. 105
Figure 9-12. The serial cable is connected to the console. 106
Figure 9-13. System cable connections for SpinServer components. 107
Figure 10-1. High availability with two SpinServers and one SpinStor RAID disk enclosure 112
Figure 10-2. High availability with two SpinServers and two SpinStor RAID disk enclosures 113
Figure 11-1. Rear view of the 120-volt UPS 117
Figure 11-2. A power configuration with one of each of the following components: SpinServer, SpinStor RAID, SpinStor JBOD, and 120-volt UPS 118
Figure 11-3. Rear view of the 208-volt UPS 120
Figure 11-4. A power configuration with two of each of the following components: SpinServer, SpinStor RAID, SpinStor JBOD, and 208-volt UPS 121
Figure 12-1. Press the **|Test** power button on the 120 volt UPS. 124
Figure 12-2. Turn on both power switches. 124
Figure 12-3. Turn on both power switches. 125
Figure 12-4. SpinStor JBOD LEDs 126
Figure 12-5. Press the power button on the front panel of the SpinServer. 127
Figure 12-6. SpinStor RAID LEDs 127

Figure 13-1. Press the power button on the front panel of the SpinServer. 130
Figure 13-2. Turn off both power switches. 130
Figure 13-3. Turn off both power switches. 131
Figure 14-1. The LEDs and switches on the front panel of the SpinServer 135
Figure 14-2. The SCSI drive carrier LEDs 138
Figure 14-3. The power supply LED 138
Figure 14-4. The front panel LEDs on the SpinStor RAID or JBOD 139
Figure 14-5. The fault indicator LEDs on the back of the SpinStor JBOD enclosure 141
Figure 14-6. The fault indicator LEDs on the back of the SpinStor RAID enclosure 141
Figure 14-7. SpinStor JBOD LEDs 141
Figure 14-8. RAID LEDs 143
Figure 14-9. Power cord connections 145
Figure 14-10. Spinnaker rack with PDUs 146
Figure 15-1. The slot settings on the SpinStor enclosure 149
Figure 15-2. The rotary switches on the back of the SpinStor JBOD 150
Figure 15-3. MSB and LSB switches are set to 1 and 0 150
Figure 15-4. The MSB and LSB switches on the SpinStor JBOD 150

List of Tables

Table 3-1. Physical Dimensions for the SpinServer 14
Table 3-2. Power Specifications for the SpinServer 15
Table 3-3. Environmental Requirements for the SpinServer 15
Table 3-4. Physical Dimensions for the SpinStor RAID and JBOD 16
Table 3-5. Power Specifications for the SpinStor RAID 16
Table 3-6. Power Specifications for the SpinStor JBOD 17
Table 3-7. Environmental Requirements for the SpinStor RAID and JBOD 17
Table 3-8. Physical Dimensions for the 120-Volt UPS 18
Table 3-9. Power Specifications for the 120-Volt UPS 18
Table 3-10. Environmental Requirements for the 120-Volt UPS 19
Table 3-11. Physical Dimensions for the 208-Volt UPS 19
Table 3-12. Power Specifications for the 208-Volt UPS 20
Table 3-13. Environmental Requirements for the 208-Volt UPS 20
Table 7-1. SpinServer Installation Kit 76
Table 7-1. SpinServer Mounting Hardware Kit 78
Table 8-1. SpinStor Mounting Hardware Kit. 90
Table 9-1. Settings for MSB and LSB Switches on the SpinStor JBOD 100
Table 11-1. PDU Specifications 115
Table 15-1. Disk ID Settings for JBODs 152
Table 18-1. Regulatory Summary for the SpinServer 159
Table 18-2. Regulatory Summary for the SpinStor 160
Table 18-3. SpinServer EU Declaration of Conformity 161
Table 18-4. SpinStor RAID-146 and JBOD-146 EU Declaration of Conformity 162
Table 18-5. SpinStor RAID-73 and JBOD-73 EU Declaration of Conformity 163

1.0 About This Guide

The *SpinServer 3300 Installation Guide* is written for system administrators. It includes information that is needed to install a SpinServer® 3300 system. After you install the system hardware, see the current version of the *Admininstration Guide* for instructions on installing and configuring the SpinFS® software.

1.1 Typographical Conventions

This document uses the following typographical and keying conventions:

- **`Fixed-width bold`** indicates commands and command options in syntax definitions, examples, and running text.
- *Italics* indicate user-supplied values. For example, **`-deviceid`** *`device_ID`* indicates that you supply a device ID for *`device_ID`* after the **`-deviceid`** parameter. Italics also indicate emphasis and the titles of books.
- **Bold** indicates GUI elements (including menus, menu items, labels, buttons, icons, and folders), keys on the keyboard (for example, **Enter** and **ESC**), and literal values.
- `Fixed-width text` indicates screen output.
- The backslash character (`\`) is used to indicate a line break in a command. When issuing a command, you do not need to enter this symbol.
- Lists from which you must choose an item in syntax descriptions are enclosed in braces (`{ }`). For example, `{`**`true`** `|` **`false`**`}` indicates that you must choose between **`true`** and **`false`**.
- The vertical column (`|`) separates items in a list of choices enclosed in braces in syntax descriptions, as shown in the previous example.
- Ellipses (**`...`**) in syntax descriptions indicate that you can repeat the preceding item one or more times. Ellipses in examples indicate that the information is omitted for the sake of brevity.
- An item in syntax descriptions enclosed in square brackets (`[ ]`) is optional. For example in this command, the `[ ]` indicate that the parameter **`-nodetype`** is optional: `spinserver::>` **`spinaccess cifs servers new -vsname VS1 -netbios NB1 -domain ENG`** `[`**`-nodetype H`**`]`. Leaving the optional parameters out of the command line has no consequences for command execution. The brackets are not to be entered as part of the command.

1.2 Statements of Warning

Statements of warning and caution are used in this guide. They have the following meanings and uses.

Warning: This statement indicates that failure to follow directions in the statement could result in bodily harm or loss of life.

Caution: This statement indicates that failure to follow directions in the statement could result in damage to equipment or loss of information and data.

Important: This statement presents clarifying information or specific instructions.

Note: This statement presents commentary, sidelights, or interesting points of information.

1.3 Organization of the Guide

This guide provides preinstallation information that is followed by specific tasks that you must complete to install the SpinServer 3300 components in your equipment racks. After the installation is complete, you are ready to configure the SpinServer and the SpinStor® RAID and JBOD.

Part I: Introduction

Part I includes the following chapter:

Chapter 2: Introduction

Chapter 2 provides an introduction to the features of the Spinnaker Networks SpinServer and SpinStor products. See page 5.

2.0 Introduction

The SpinServer 3300 provides the following advantages:

- High capacity for storage and delivery of content and data.
- Storage capacity that can be expanded without system downtime or disruptions.
- Simple management and maintenance.
- Single point of global management.
- SpinCluster® enables end users to view a number of SpinServers as a single file system in a server cluster.
- SpinShot™ creates a snapshot of data.
- SpinRestore restores data from SpinShots.
- SpinMove® provides the administrative tools to nondisruptively move file systems to new locations within a SpinCluster.
- SpinMirror™ provides the administrative tools to mirror data within a SpinCluster.
- SpinHA® provides a system with high availability (HA) that has no single point of failure.

2.1 SpinServer

The SpinServer is an enterprise-class, transparently scalable storage system that includes these major components: the SpinServer, the SpinStor Redundant Array of Independent Disks (RAID), and the SpinStor Just a Bunch of Disks (JBOD). With these components and SpinFS, the file-management tool suite that is presented in the SpinManager™ graphical user interface (GUI) and command line interface (CLI), the SpinServer system processes file system requests from NFS and CIFS clients.

SpinServer

Figure 2-1. SpinServer 3300

The following items are included in the SpinServer shipping carton:

- SpinServer chassis
- Two AC power cords
- Null modem cable (for console connection)
- Slide assemblies for rack installation
- SpinServer software and documentation CD
- *Spinnaker Networks SpinServer 3300 Rack-mounting Template*
- *Spinnaker Networks SpinServer 3300 Quick Start Guide*

If any item is missing or damaged, contact the Spinnaker Networks Technical Assistance Center (TAC). See the chapter “Technical Assistance Center” in “Part V: Troubleshooting” on page 153 in this guide for further information.

SpinServer Chassis Components

The SpinServer chassis includes the following components:

- Two redundant power supplies
- Two redundant SpinFS SCSI disk drives
- Two 1.26-GHz Intel Pentium III processors, 4 GB memory
- Two Gigabit Ethernet (1000Base-T) network ports
- One 10/100 MB Ethernet port for management
- Two dual port Fibre Channel Host Bus Adapters (HBA)
- Two Gigabit Ethernet (1000Base-T) SpinCluster ports

SpinStor

Figure 2-2. The front view of the SpinStor RAID or JBOD disk enclosure

Additional RAID and JBOD enclosures can be added when you need to expand your storage capacity. The SpinStor RAID enclosure provides reliable, fault-tolerant data storage. The SpinStor JBOD enclosure is attached to the RAID enclosure to provide additional storage space for data.

The SpinStor RAID and SpinStor JBOD disk enclosures can be populated with the following choices of disk drives:

- 73 GB, 15,000 revolutions per minute (RPM) disk drive
- 146 GB, 10,000 RPM disk drive

The SpinStor enclosures include the following components. If any item is missing or damaged, contact the Spinnaker Networks Technical Assistance Center (TAC). See the chapter “Technical Assistance Center” in “Part V: Troubleshooting” on page 153 in this guide for additional information.

SpinStor RAID

The following items are included in the SpinStor RAID shipping carton:

- SpinStor RAID enclosure with dual RAID controllers
- Two AC power cords
- Four fiber-optic Fibre Channel cables
- Four fiber-optic Gigabit Interface Converters (GBICs)
- Two copper GBICs
- Shelf assemblies for rack installation
- Two enclosure end caps
- One hardware-mounting kit
- SpinServer software and documentation CD
- *Spinnaker Networks SpinStor RAID/JBOD Rack-mounting Template*
- Separately boxed disk drives in disk carriers

SpinStor JBOD

The following items are included in the SpinStor JBOD shipping carton:

- SpinStor enclosure with dual JBOD I/O modules
- Two AC power cords
- Two copper DB-9 Fibre Channel cables
- Four copper Fibre Channel GBICs
- Shelf assemblies for rack installation
- Two enclosure end caps
- One hardware-mounting kit
- SpinServer software and documentation CD
- *Spinnaker Networks SpinStor RAID/JBOD Rack-mounting Template*
- Separately boxed disk drives in disk carriers

2.2 SpinServer Software

The SpinServer 3300 includes the SpinFS software, which is provided on the Spinnaker CD for installation on the SpinServer.

SpinFS Basic Software Package

The SpinFS software package includes the following:

- SpinManager CLI and GUI provide management tools.
- SpinCluster scales capacity and performance.
- SpinMove provides nondisruptive file-system movement anywhere within a SpinCluster.
- SpinShot provides a snapshot of data, taken at a particular point in time, that is stored on the same SpinServer. A SpinShot is read-only.
- SpinRestore restores data from SpinShots.

The SpinManager management CLI and GUI interfaces provide the tools to set up and configure clusters, RAID sets, storage pools, and virtual file systems (VFSs). After initial configuration, use the CLI and GUI tools to monitor the performance of the SpinServer system.

SpinServer Optional Software Packages

Optional software packages can be separately ordered from Spinnaker Networks, including the following:

- SpinHA provides fast, transparent disk-access failover in the event of a server failure when configured on two or more SpinServers.
- SpinMirror provides the asynchronous VFS mirroring of data to SpinServers that are connected via a LAN, MAN, or WAN in a SpinCluster.

2.3 SpinServer Documentation

The following documentation is provided for the SpinServer 3300:

- *SpinServer 3300 Installation Guide*
- *SpinServer 3300 Quick Start Guide*
- *SpinServer 3300 Field Service Guide*
- *SpinServer 3300 Release Notes*
- *SpinServer Site Preparation Guide*
- *Administration Guide* for the current version of the SpinFS software.
- *Administration Reference* for the current version of the SpinFS software.

Documentation is available in PDF format and can be accessed from the SpinManager GUI or from the Spinnaker CD. To access the documentation from the CD, open the *root_directory*/SpinDocs/index.html file in a web browser, where *root_directory* is the root directory of the CD.

Part II: Product Specifications and Safety Warnings

Part II includes the following chapters:

Chapter 3: Product Specifications and Requirements

Chapter 3 provides detailed information about product specifications and product site requirements. See page 13.

Chapter 4: Preinstallation Tasks

Chapter 4 describes system component topology and provides safety information and warnings specific to the features of the SpinServer and SpinStor products. See page 29.

3.0 Product Specifications and Requirements

This chapter describes the physical dimensions of the SpinServer system components. It also details the power and environmental requirements for proper functioning of the SpinServer system.

3.1 General Product Specifications

Product Tempering

If the equipment has been stored in an environment outside the operating temperature range specified in the following section, allow the equipment to sit at room temperature for 24 hours before beginning the installation process.

Caution: Condensation can occur during shipment. It is important to allow the equipment to warm to room temperature before installation.

Floor Space Requirements

It is important to provide sufficient floor space to allow adequate airflow around the system and to allow you to perform maintenance procedures on the SpinServer chassis. Provide adequate floor space to meet the following requirements:

- With side panels and doors in place, the actual floor space needed by a Spinnaker rack is equal to 2 feet (60 cm) by 3 feet, 3 inches (97.5 cm).
- At least three feet (90 cm) of clearance behind the equipment rack is required to provide adequate space for exhaust air and easy access to the SpinServer chassis and SpinStor enclosures for servicing.
- To access the interior components of the SpinServer chassis, a minimum of three feet (90 cm) in front of the chassis is required to slide the chassis from the rack.

3.2 SpinServer and SpinStor Port Interface Specifications

The specifications for the port interfaces for the SpinServer and the SpinStor follow:

Fibre Channel Physical Layer Interface

- 1.0625 Gigabaud/second
- Multimode 850 nm laser fiber optic interface
- Compliant with FDA and IEC Class 1 laser safety standards
- Duplex SC fiber optic receptacle
- Multimode 50 um/125 um fiber, maximum fiber cable length is 500 m
- Multimode 62.5 um/125 um fiber, maximum fiber cable length is 200 m

SpinServer Network and Cluster Ethernet 1000Base-T Interface

- Copper 10Base-T/100Base-T/1000Base-T
- Compliant with standards IEEE 802.3u and IEEE 802.3ab
- Copper RJ-45 connector
- UTP Category 5/5e cable, up to 100 m installed in accordance with ANSI/TIA/EIA-568-A and ISO/IEC 11801:1995 standards

3.3 Dimensions and Environmental Specifications for the SpinServer

For your reference, the physical dimensions and the power and environmental requirements for the SpinServer are given in the following tables.

Physical Dimensions for the SpinServer

The physical dimensions of the SpinServer chassis are given in the following table.

Table 3-1. Physical Dimensions for the SpinServer

Physical Dimensions for the SpinServer			
Dimensions (HxWxD)		**Weight**	
Inches	6.97 x 17.52 x 25.99	**Lbs.**	62
Centimeters	17.7 x 44.5 x 66.0	**Kg.**	28.2

Power Specifications for the SpinServer

The power requirements for proper functioning of the SpinServer are given in the following table.

Table 3-2. Power Specifications for the SpinServer

Power Specifications for the SpinServer				
Typical Input Requirements Note: These values are approximate and are provided for the purpose of specifying PDU and UPS equipment and branch circuits.	Voltage (Vac)	Current (A)	VoltAmp (VA)	Power (W)
	120	2.11	253	242
	208	1.42	296	236
Power Supply Output, Maximum (W)	350			
Heat Dissipation, Typical BTU/hr Kg-cal/min	815 3.42			

Equipment Environmental Requirements for the SpinServer

The environmental requirements for proper functioning of the SpinServer chassis are given in the following table.

Table 3-3. Environmental Requirements for the SpinServer

Environmental Requirements for the SpinServer	
Ambient Temperature Operating Range C° (F°) Nonoperating Range C° (F°)	10 – 35 (50 – 95) -10 – 60 (14 – 140)
Relative Humidity (noncondensing) Operating (%) Nonoperating (%)	20 – 80 5 – 90
Operating Elevation M (ft.)	3048 (10,000)

3.4 Dimensions and Environmental Specifications for the SpinStor

For your reference, the physical dimensions and the power and environmental requirements for the SpinStor RAID and JBOD are given in the following tables.

Physical Dimensions for the SpinStor RAID and JBOD

The physical dimensions of the SpinStor enclosures are given in the following table.

Table 3-4. Physical Dimensions for the SpinStor RAID and JBOD

Physical Dimensions for the SpinStor RAID and JBOD			
Dimensions (HxWxD)		**Weight**	
Inches	5.22 x 17.72 x 22.759	**Lbs.**	88
Centimeters	13.3 x 45.0 x 57.8	**Kg.**	40

Power Specifications for SpinStor RAID and JBOD

The power requirements for the proper functioning of the SpinStor enclosures are given in the following tables.

SpinStor RAID Power Specifications

The power requirements for proper functioning of the SpinStor RAID are given in the following table.

Table 3-5. Power Specifications for the SpinStor RAID

Power Specifications for the SpinStor RAID				
Input Requirements, Rated Rated Voltage (Vac) Rated Frequency (Hz) Rated Input Current, Max. (A)	100 – 240 50 – 60 9 (100 Vac)			
Typical Input Requirements Note: These values are approximate and are provided for the purpose of specifying PDU and UPS equipment and branch circuits.	Startup Peak Power			
	Power (W)		565	
	Duration (S)		6	
	Operating			
	Voltage (Vac)	Current (A)	VoltAmp (VA)	Power (W)
	120	3.74	449	449
	208	2.13	443	434
Power Supply Output, Max. (W)	430			
Heat Dissipation, Typical BTU/hr Kg-cal/min	1508 6.33			

SpinStor JBOD Power Specifications

The power requirements for proper functioning of the SpinStor JBOD are given in the following table.

Table 3-6. Power Specifications for the SpinStor JBOD

Power Specifications for the SpinStor JBOD				
Input Requirements, Rated Rated Voltage (Vac) Rated Frequency (Hz) Rated Input Current, Max. (A)	100 – 240 50 – 60 9 (100 Vac)			
Typical Input Requirements Note: These values are approximate and are provided for the purpose of specifying PDU and UPS equipment and branch circuits.	Startup Peak Power			
	Power (W)		525	
	Duration (S)		6	
	Operating			
	Voltage (Vac)	Current (A)	VoltAmp (VA)	Power (W)
	120	3.45	414	414
	208	1.98	412	402
Power Supply Output, Max. (W)	430			
Heat Dissipation, Typical BTU/hr Kg-cal/min	1392 5.85			

Equipment Environment Requirements for the SpinStor RAID and JBOD

The environmental requirements for the proper functioning of the SpinStor disk enclosures are given in the following table.

Table 3-7. Environmental Requirements for the SpinStor RAID and JBOD

Environmental Requirements for the SpinStor RAID and JBOD	
Ambient Temperature Operating Range C° (F°) Nonoperating Range C° (F°)	5 – 35 (41 – 95) 0 – 65 (32 – 149)
Relative Humidity (noncondensing) Operating (%) Nonoperating (%)	5 – 95 5 – 95
Operating Elevation M (ft.)	3048 (10,000)

Caution: Operating the disk enclosure with one or more disks removed increases the operating temperature of the remaining disks. Although the increase is modest and does not cause imminent failure, avoid operating the disk enclosure with one or more disks removed.

3.5 Dimensions and Environmental Specifications for the 120-Volt UPS

For your reference, the physical dimensions and the power and environmental requirements for the 120-volt Uninterrupted Power Supply (UPS) are given in the following tables.

Physical Dimensions for the 120-Volt UPS

The physical dimensions of the 120-volt UPS chassis are given in the following table.

Table 3-8. Physical Dimensions for the 120-Volt UPS

Physical Dimensions for the 120-Volt UPS			
Dimensions (HxWxD)		**Weight**	
Inches Chassis Front Panel	 3.36 x 17.0 x 18.0 4.42 x 18.9 x 18.0	Lbs.	62
Centimeters Chassis Front Panel	 8.53 x 43.2 x 45.7 8.70 x 48.0 x 45.7	Kg.	28.1

Power Specifications for the 120-Volt UPS

The power specifications for the 120-volt UPS are given in the following table.

Table 3-9. Power Specifications for the 120-Volt UPS

Power Specifications for the 120-Volt UPS	
Online Input Voltage Range	82 – 144 VAC
Output Voltage Range	106 – 127 VAC
Frequency Limits, Online Operation (Hz)	47 – 63
Transfer Time	2 ms Typical, 4 ms Maximum
Maximum Load	1000 VA/670 W
On-Battery Output Voltage	115 VAC

On-Battery Frequency (Hz)	50 or 60, unless synchronized to utility during brownout
Typical Battery Life	3 – 6 years, depending on number of discharge cycles and ambient temperature
Typical Recharge Time	3 hours

Environmental Requirements for the 120-Volt UPS

The environmental requirements for proper functioning of the 120-volt UPS are given in the following table.

Table 3-10. Environmental Requirements for the 120-Volt UPS

Environmental Requirements for the 120-Volt UPS	
Ambient Temperature Operating Range C° (F°) nonoperating Range C° (F°)	 0 – 40 (32 – 104) -15 – 45 (5 – 113)
Relative Humidity (noncondensing) Operating and nonoperating (%)	0 – 95
Operating Elevation	0 – 10,000 ft. (0 – +3,000 m)

3.6 Dimensions and Environmental Specifications for the 208-Volt UPS

For your reference, the physical dimensions and the power and environmental requirements for the 208-volt UPS are given in the following tables.

Physical Dimensions for the 208-Volt UPS

The physical dimensions of the 208-volt UPS chassis are given in the following table.

Table 3-11. Physical Dimensions for the 208-Volt UPS

Physical Dimensions for the 208-Volt UPS			
Inches	5.25 x 17.0 x 24.5	**Lbs.**	128
Centimeters	13.3 x 43.2 x 62.2	**Kg.**	58

Power Specifications for the 208-Volt UPS

The power specifications for the 208-volt UPS are given in the following table.

Table 3-12. Power Specifications for the 208-Volt UPS

Power Specifications for the 208-Volt UPS	
Online Input Voltage Range	160 – 253 VAC
Output Voltage Range	177 – 229 VAC
Frequency Limits, Online Operation (Hz)	47 – 63
Transfer Time	2 ms typical, 4.5 ms maximum
Maximum Load	3000 VA/2250 W
On-Battery Output Voltage	208 VAC
On-Battery Frequency (Hz)	50 or 60, unless synchronized to utility during brownout
Typical Battery Life	3 – 6 years, depending on number of discharge cycles and ambient temperature
Typical Recharge Time	2 – 5 hours

Environmental Requirements for the 208-Volt UPS

The environmental requirements for proper functioning of the 208-volt UPS are given in the following table.

Table 3-13. Environmental Requirements for the 208-Volt UPS

Environmental Requirements for the 208-Volt UPS	
Ambient Temperature Operating Range C° (F°) nonoperating Range C° (F°)	 0 to 40 (32 – 104) -15 to 45 (5 – 113)
Relative Humidity (noncondensing) Operating and nonoperating (%)	0 – 95
Operating Elevation	0 – 10,000 ft. (0 – +3,000 m)

3.7 Hardware and Software Requirements

Additional hardware and software requirements for the proper functioning of the SpinServer system are detailed in this section.

Hardware Requirements

The following hardware is required to run and manage the SpinServer system.

Ethernet

Depending on your configuration, your SpinServer can use as many as four gigabit Ethernet network connections in addition to the 10/100Base-T Ethernet connection used for the management interface.

- One 10/100Base-T Ethernet port for management of the SpinServer
- Two gigabit Ethernet (1000Base-T) ports for network traffic
- Two gigabit Ethernet (1000Base-T) ports for multiple SpinServer clustering

Console

To initialize the SpinServer, a serial console, connected to the serial port (COM1) with the null modem cable, is needed to access the command line interface (CLI) management software.

After initialization, the management software is used to complete configuration and management tasks, receive error messages, and maintain your system. For the flexibility and convenience of working remotely, any host running secure shell (SSH) can access the CLI and any host with a web browser can access the GUI.

Ethernet Switches for SpinCluster Ports

The following Ethernet switches, for clustering, have been tested and certified for interoperability with the SpinServer in the Spinnaker Integration Labs and have been labeled Spinnaker Certified:

- Extreme Networks Gigabit Ethernet Switch, Summit 7i
- Extreme Networks Gigabit Ethernet Switch, Summit 5i
- Extreme Networks Gigabit Ethernet Switch, Summit 1i
- Cisco Systems, Inc. Gigabit Ethernet Switch, Catalyst 6500 series
- Dell PowerConnect 5224

If you need to use a different Ethernet switch, it must support the functional features listed below:

- 1000Base-T Ethernet connections
- 9KB jumbo frames
- Port-based VLAN
- BootP/DHCP relay

Also, if you need to use a different Ethernet switch, a switch supporting the following switch features are recommended but not required for normal SpinServer operations:

- Layer 3 routing
- 802.1q VLAN tagging
- Port mirroring

Note: Any standard 10/100/1000Base-T Ethernet switch can be used for the network and management port connections.

Fiber Channel Switches for SAN Connectivity

The following Fiber Channel switches have been tested and certified for interoperability with the SpinServer in the Spinnaker Integration Labs and have been labeled Spinnaker Certified:

- Brocade Communications Systems, Inc. SilkWorm 3900 32-port, 1 Gbit/sec and 2 Gbit/sec Fibre Channel switch
- Brocade Communications Systems, Inc. SilkWorm 3800 16-port, 1 Gbit/sec and 2 Gbit/sec Fibre Channel switch
- Brocade Communications Systems, Inc. SilkWorm 3200 8-port, 1 Gbit/sec and 2 Gbit/sec Fibre Channel switch
- Brocade Communications Systems, Inc. SilkWorm 2800 16-port, 100 MB/sec Fibre Channel switch
- Brocade Communications Systems, Inc. SilkWorm 2400 8-port, 100 MB/sec Fibre Channel switch

Spinnaker is also a member of the Brocade Fabric Developers Program and is working with Brocade Communications Systems, Inc. on interoperability.

Certified Backup and Restore Hardware Products

The following hardware equipment has been tested and certified for backups and restores on the SpinServer in the Spinnaker Integration Labs and has been labeled Spinnaker Certified:

- ADIC Scalar 100 tape robot (with internal IBM Ultrium TD-1 tape drive)
- Dell PowerVault 110T DLT1 tape drive
- Hewlett-Packard StorageWorks Ultrium 230 tape drive
- IBM TotalStorage Ultrium 3580 tape drive
- Overland Storage Neo series tape robot (with internal HP Ultrium 1 tape drive)
- Quantum DLT 8000 tape drive
- Quantum SDLT 220 tape drive
- Sony SDX-500C tape drive
- StorageTek L20 tape robot (with internal Seagate Ultrium 6242 tape drive)
- A tape library that is certified to work with VERITAS Software Corporation NetBackup DataCenter 3.4 and 4.5, Legato NetWorker 7.0, or IBM Tivoli Storage Manager 5.2.2.0.
- A standalone tape drive that is certified to work with VERITAS Software Corporation NetBackup DataCenter 3.4 and 4.5, Legato NetWorker 7.0, or IBM Tivoli Storage Manager 5.2.2.0.

Software Requirements

The following software is required to run, manage, and access your SpinServer system.

Client Operating Systems

The following CIFS and NFS operating system requirements have been tested and certified for interoperability with the SpinServer in the Spinnaker Integration Labs and have been labeled Spinnaker Certified:

CIFS

- Microsoft Windows 98, Windows NT 4.0 (with Service Pack 6a), Windows 2000, Windows XP, Windows 2003 Server, or Microsoft .NET.
- Mac OS X v10.3 (Panther)

NFS

- AIX 5.1
- HP-UX 11.0
- IRIX 6.5.13 or later
- Red Hat Linux 7.2, with Linux kernel 2.4.9-31 (operational problems can occur when

using other versions of the Linux kernel)

- Solaris 7.0 or 8.0

File Access Protocols

Your client computers must be running one of the following file access protocols:

- NFS, Version 2 or 3
- CIFS

Backup and Restoration Protocols

For data backup and restoration, the SpinServer system supports the following NDMP protocols:

- NDMP, Version 2.0
- NDMP, Version 3.0

Certified Backup and Restoration Software Product

The following software has been tested and certified for backup and restoration on the SpinServer in the Spinnaker Integration Labs and has been labeled Spinnaker Certified:

- VERITAS Software Corporation NetBackup DataCenter, 3.4 and 4.5
- Legato NetWorker 7.0
- IBM Tivoli Storage Manager 5.2.2.0

SNMP Trap Destinations

For Simple Network Management Protocol (SNMP) trap destinations, the following SNMP protocols are supported.

- SNMPv1 (Version 1)
- SNMPv2c (Version 2)

Network Management Solution

The following software has been tested and certified for use with the SpinServer in the Spinnaker Integration Labs and has been labeled Spinnaker Certified:

- Hewlett-Packard Company HP OpenView Network Node Manager

Spinnaker is a Hewlett-Packard Company HP OpenView Member Partner.

Browser

Microsoft Internet Explorer 5.x or 6.x or Netscape Navigator 4.7 is recommended for accessing the management software from a browser.

Adobe Acrobat Reader

Adobe Acrobat Reader is required to view Spinnaker documentation in the portable document format (PDF). You can obtain a free copy of the Adobe Acrobat Reader from www.adobe.com/products/acrobat/.

3.8 Tested Equipment

The following equipment has been tested with the SpinServer system and is compatible with the SpinServer components.

UPS

The following 120-volt and 208-volt uninterruptible power supply units (UPS) have been tested for use with the SpinServer system.

- American Power Conversion Corp. (APC) UPS, 120Vac, 1000VA
- American Power Conversion Corp. (APC) UPS, 208Vac, 3000VA

Equipment for Backup and Restoration

The following software and hardware equipment has been tested and certified for backup and restoration on the SpinServer in the Spinnaker Integration Labs and has been labeled Spinnaker Certified:

- VERITAS Software Corporation NetBackup DataCenter, 3.4 and 4.5
- Legato NetWorker 7.0
- IBM Tivoli Storage Manager 5.2.2.0
- A tape library that is certified to work with VERITAS Software Corporation NetBackup DataCenter 3.4 and 4.5, Legato NetWorker 7.0, or IBM Tivoli Storage Manager 5.2.2.0
- A standalone tape drive that is certified to work with VERITAS Software Corporation NetBackup DataCenter 3.4 and 4.5, Legato NetWorker 7.0, or IBM Tivoli Storage Manager 5.2.2.0

In addition, VERITAS Software Corporation in independent tests in their labs has qualified the SpinServer as VERITAS Netbackup compatible. Spinnaker is an active member of the VERITAS Software Corporation Enabled Program.

Spinnaker is continuously testing new backup and restoration products. If you are using other backup products, contact the Spinnaker Technical Assistance Center to verify compatibility. See the chapter “Technical Assistance Center” in “Part V: Troubleshooting” on page 153 in this guide for further information.

Note: For information about tape devices for backup and restoration that have been tested for use with the SpinServer, see Support on the Spinnaker Networks web site at www.spinnakernet.com/support/support_home.html.

Fibre Channel Bridges, Routers, and Gateways

The following Fiber Channel bridges, routers, and gateways have been tested and certified for interoperability with the SpinServer in the Spinnaker Integration Labs and have been labeled Spinnaker Certified:

- ATTO Technology, Inc. FibreBridge 1180E
- Advanced Digital Information Corporation (ADIC) Storage Networking Controllers SNC 5100 Fibre Bridge
- Crossroads Systems, Inc. Crossroads 4250 Storage Router

Equipment for Server Load Balancing

The following equipment has been tested and Spinnaker Certified for use with the SpinServer system for server load balancing:

- Extreme Networks Summit 5i Switch

For information about server load balancing, contact the Spinnaker Technical Assistance Center. See the chapter “Technical Assistance Center” in “Part V: Troubleshooting” on page 153 in this guide for further information.

3.9 Certifications, Partnerships, and Memberships

Spinnaker Networks lists the following achievements in certifications, partnerships, and memberships.

Certifications

Spinnaker Networks SpinServer 3300 is qualified for use with VERITAS Software Corporation NetBackup DataCenter, 3.4 and 4.5.

Partnerships

Spinnaker Networks has established the following partnerships:

Oracle Corporation

Spinnaker Networks has joined the Oracle Corporation Oracle PartnerNetwork to provide network attached storage for Oracle users.

VERITAS Software Corporation

Spinnaker is a member of the VERITAS Software Corporation Enabled Program and works closely with VERITAS to provide VERITAS tested and qualified solutions.

Extreme Networks

Spinnaker is a member of the Extreme Networks Partner Program for interoperability testing and certification.

Brocade Communications Systems, Inc.

Spinnaker is a Member of the Brocade Communications Systems, Inc. Brocade Fabric Developers Program, The Brocade Developer, and together we create and qualify products that interoperate seamlessly in Brocade-based heterogeneous Storage Area Networks (SANs).

Hewlett-Packard Company

Spinnaker is a member of the Hewlett-Packard Company HP Solution Alliance Program, and is developing and certifying solutions to work with HP OpenView Products.

4.0 Preinstallation Tasks

This chapter provides assistance in designing storage system topology. It also details the unpacking, handling, and safety guidelines for the SpinServer system components.

4.1 Before You Begin

The tasks that must be completed before you begin installation and configuration include obtaining necessary IP addresses and designing a naming topology for system entities.

IP Addresses

You need the following IP addresses before you begin the configuration of the SpinServer system components. Each set of ports must be on a separate IP subnet. Obtain these IP addresses from your network administrator:

- An IP address is needed for the management software port (mgmt0) for each SpinServer. For remote access of the management interface, the port can be configured on a separate management LAN.
- An IP address is needed for both SpinServer network ports (serv0 and serv1) for each SpinServer.
- For clustering, an IP address is needed for both cluster ports (clus0 and clus1). For security reasons, cluster ports must be attached to a secure network. The cluster port must be configured even if only a single SpinServer is being installed to assure that all system components work together properly.

Note: For further information see the chapter “Configuring the SpinServer System” on page 147 in this guide.

Naming Conventions

For ease of management of the SpinServer system and the data stored on it, you need to give some thought to the names you choose for the SpinServer system entities, including the SpinServers, network virtual interfaces, storage pools, virtual servers, and virtual file systems.

To prevent confusion and potential loss or misplacement of data, the names you choose must be orderly and easily recognizable by all system administrators who maintain the SpinServer system. Any naming system can be chosen for the system, but you must observe the following rules:

- The IDs for the SpinServers must be unique within a cluster.
- Names can be 1 to 32 characters long, consisting of letters, numbers, period, and underscore. They must start with a letter or number. Names are case sensitive; for example, **`vs0`**, **`vS0`**, and **`Vs0`** are all distinct, acceptable names for a virtual server.
- Virtual file system (VFS) names must be unique within a cluster. You cannot use the same VFS name on multiple, different virtual servers.

4.2 Storage System Components

The SpinServer storage system can include the following:

- One or more SpinServers
- One or more SpinStor RAID disk enclosures attached to the SpinServers or to another SpinStor RAID disk enclosure
- An optional SpinStor JBOD disk enclosure attached to the SpinStor RAID disk enclosure or to another SpinStor JBOD disk enclosure
- A management LAN connection
- A SpinCluster LAN on a secure network

4.3 Designing Storage System Topologies

Using the components listed previously, it is important to design the storage system topology before you begin the process of setting up the equipment. This presetup design exercise makes the installation of equipment in the rack and the cabling tasks easier to complete.

SpinServer Configuration

The SpinServer includes the following:

- One 10/100 Ethernet port (mgmt0) is included for management of the SpinServer system. This port must be connected to the network that is used to configure and control the SpinServer.
- Two gigabit Ethernet ports for network traffic and client access. These network ports (serv0 and serv1) connect the SpinServer to the clients that are using the SpinServer for

data storage.

- Two gigabit Ethernet ports for clustering (clus0 and clus1). These ports connect the SpinServer to other SpinServers for scalability and performance.
- Four fiber-optic Fibre Channel connectors. These ports connect the SpinServer to the RAID and JBOD disk enclosures that provide the actual physical storage of the data.
- To access the CLI management software, connect a console with a null modem cable to the serial port (COM1).
- With the cable provided by the UPS manufacturer, connect the COM2 port to the UPS computer interface port.

The three types of Ethernet ports (management, network, and clustering) are used to transport very different types of data, and for that reason, it is appropriate to connect them to different networks. For example, the management port is connected to a physically secure network that is dedicated to management; the network port is connected to the general corporate network for client access; and the cluster ports are connected to a dedicated, secure network for maximum performance and security.

Simple SpinServer Configuration

In the simplest configuration, the SpinServer management and network ports are connected to the network, and two of the Fibre Channel ports are connected to a RAID enclosure. The other two Fibre Channel ports are unused. The UPS is connected to the COM2 port of the SpinServer. No other equipment is connected to the UPS.

The RAID enclosure includes two RAID controllers and 15 disks, as well as the mechanical, electrical, and thermal components necessary for their operation, which is monitored by the SCSI Enclosure Services (SES) manager. The SES manager reports the operational status of the disks to the RAID controllers.

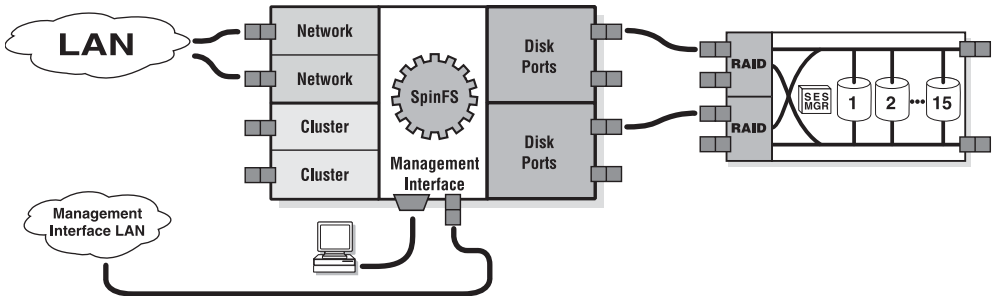

Figure 4-1. Single SpinServer topology

The SpinServer management port is connected to a console with a null modem cable to access the CLI management software.

Clustered SpinServer Configuration

In a larger, clustered configuration, the management ports are connected to their own, isolated management network for security purposes. For performance and security, the cluster ports are connected through dedicated gigabit Ethernet switches, and the Fibre Channel ports are connected to the RAID enclosures to provide the desired storage capacity. The diagram below displays one option for RAID connectivity in a cluster.

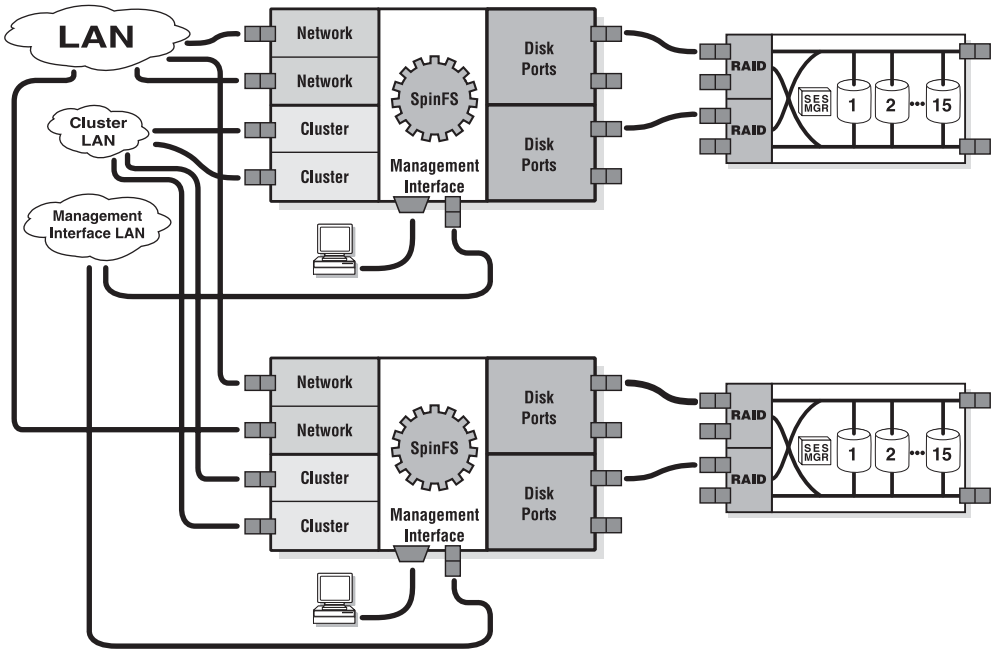

Figure 4-2. Cluster with two nodes

SpinStor RAID Configuration

The SpinStor RAID enclosures include two RAID controllers that provide redundancy and flexibility in making connections to the SpinServer.

Dual RAID Controllers

The two RAID controllers enable the RAID enclosure to be connected to the SpinServer using two separate Fibre Channel ports. The use of pairs of RAID controllers, connected separately, improves performance and reliability in addition to providing redundancy and flexibility of connections to the SpinServers in the system.

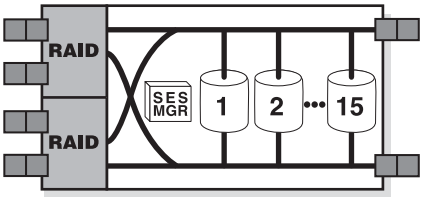

Figure 4-3. RAID connections to other system components

Connections between the SpinServer and the RAID enclosure are made with fiber-optic cables that plug into the Fibre Channel ports on the SpinServer and into the fiber-optic GBICs on the RAID enclosure. A GBIC is an interchangeable connector that converts fiber-optic or electronic signals into a standard electrical form.

In addition to the four fiber-optic GBICs (two for each RAID controller), the RAID controller enclosure has two copper GBICs that connect the RAID enclosure to a chain of up to six JBOD enclosures. Together, the RAID enclosure, plus its connected JBOD enclosures, form a storage system that can control up to 105 disks.

SpinServer to RAID Connections

The SpinServer is equipped with four fiber-optic Fibre Channel ports. Each of these ports connects directly to a RAID enclosure. Additional RAID enclosures can be connected to the RAID enclosures that are directly connected to the SpinServer. Any number of RAID enclosures can be attached to a single SpinServer, but any given RAID enclosure can have only six JBOD enclosures attached to it.

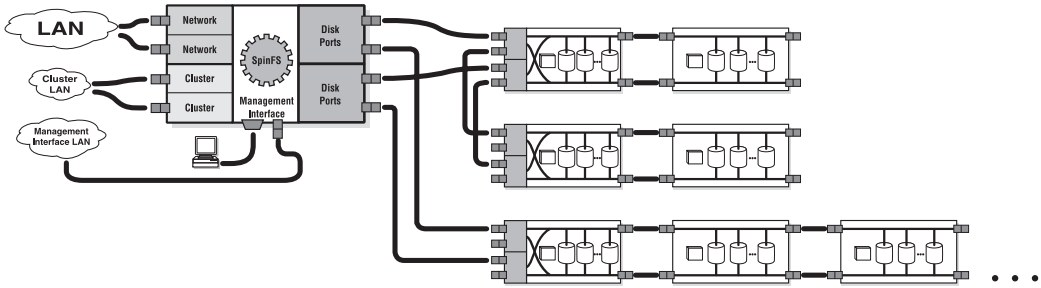

Figure 4-4. Server-to-RAID connections and the interconnections among three RAID and four attached JBOD enclosures

SpinStor JBOD Configuration

The JBOD enclosures includes 15 disks, as well as the mechanical, electrical, and thermal components necessary for their operation.

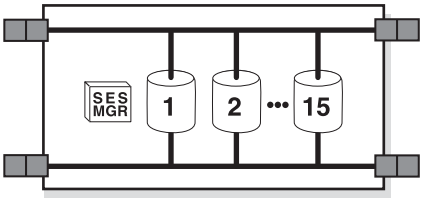

Figure 4-5. JBOD connections to other system components

The JBOD enclosures connect to the RAID enclosure and to each other. They do not connect directly to the SpinServer.

JBOD enclosures are expansion enclosures and are used to add additional disks to those controlled by the RAID controllers in a RAID enclosure. They are equipped with four copper GBICs that allow the expansion enclosure to be connected to a RAID enclosure in two independent chains, improving reliability.

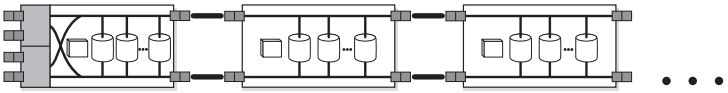

Figure 4-6. JBOD-to-RAID enclosure connections

Two GBICs are connected to the RAID enclosures by using copper Fibre Channel cables. To increase capacity, additional JBOD enclosure can be connected, using the two remaining GBICs and copper Fibre Channel cables, to other JBOD enclosures.

High Availability Configurations

SpinHA provides disk access failover if a SpinServer in a system fails. High availability (HA) configurations require two or more SpinServers and are designed to provide the system with resiliency and easy system expansion.

Note: All SpinServers sharing responsibility for a storage pool must be configured into the same cluster.

Resiliency

The goal of all HA configurations is to provide a system that has no single point of failure. In HA configurations, two or more SpinServers share responsibility for a particular storage pool. If one SpinServer fails, the other SpinServer automatically take control of its disks and continues system operations without losing any committed data.

Redundancy

Redundancy is an essential feature of an HA configuration. When properly configured, the system continues operating normally even if any of the following components fails:

- A SpinServer chassis
- Either of the pairs of disk ports in a SpinServer chassis
- A Fibre Channel cable or GBIC
- A Fibre Channel loop switch
- A RAID controller
- A disk (if it is part of a redundant RAID set)
- Any of the other redundant components, such as power supplies and fans

In many cases, multiple component failures can be tolerated if the system configuration is properly designed for redundancy.

Note: All of the HA configurations described in this section include all of the network connectivity that is detailed in Figure 4-2.

High Availability with Two SpinServers and One SpinStor RAID

The most basic high availability configuration is a system with two SpinServers, both of which are attached to the same SpinStor RAID disk enclosure. In this configuration, two disk ports from each SpinServer are connected to the SpinStor, one to each RAID controller. This is the simplest configuration that provides redundancy for the SpinServer, disk port pair, Fibre Channel, and RAID controller.

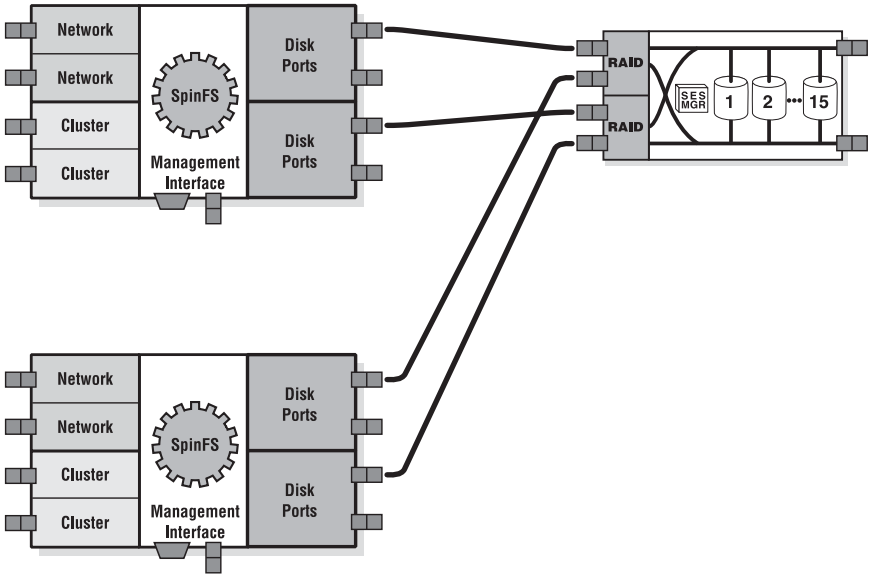

Figure 4-7. High availability with two SpinServers and one SpinStor RAID disk enclosure

High Availability with Two SpinServers and Two SpinStor RAIDs

In the second HA configuration, another SpinStor RAID enclosure, using the SpinServer disk ports that are available, is added to the previous example. This adds storage capacity and maintains redundancy for the SpinServer, disk port pair, Fibre Channel, and RAID controller.

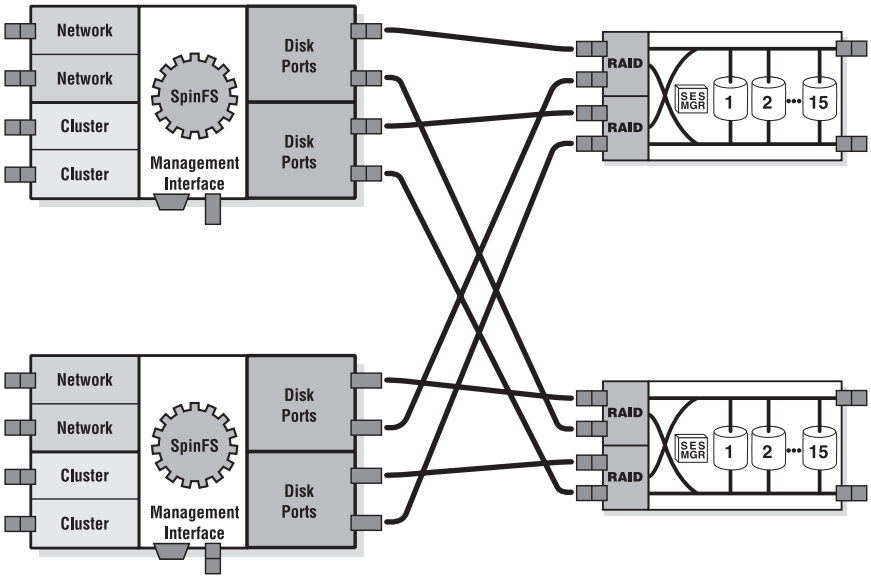

Figure 4-8. High availability with two SpinServers and two SpinStor RAID disk enclosures

High Availability with Two SpinServers, Two SpinStor RAIDs, and Switches

In the third HA configuration example, two Fibre Channel loop switches are added to simplify connectivity and add expandability. Two separate switches are needed to maintain redundancy. System operations continue even if one of the switches fails.

This configuration meets all resiliency requirements for HA. It is also easy to expand. Additional SpinServers and SpinStor RAID enclosures can be added indefinitely, limited only by the number of ports on the loop switches. However, this configuration uses only half of the available Fibre Channel ports.

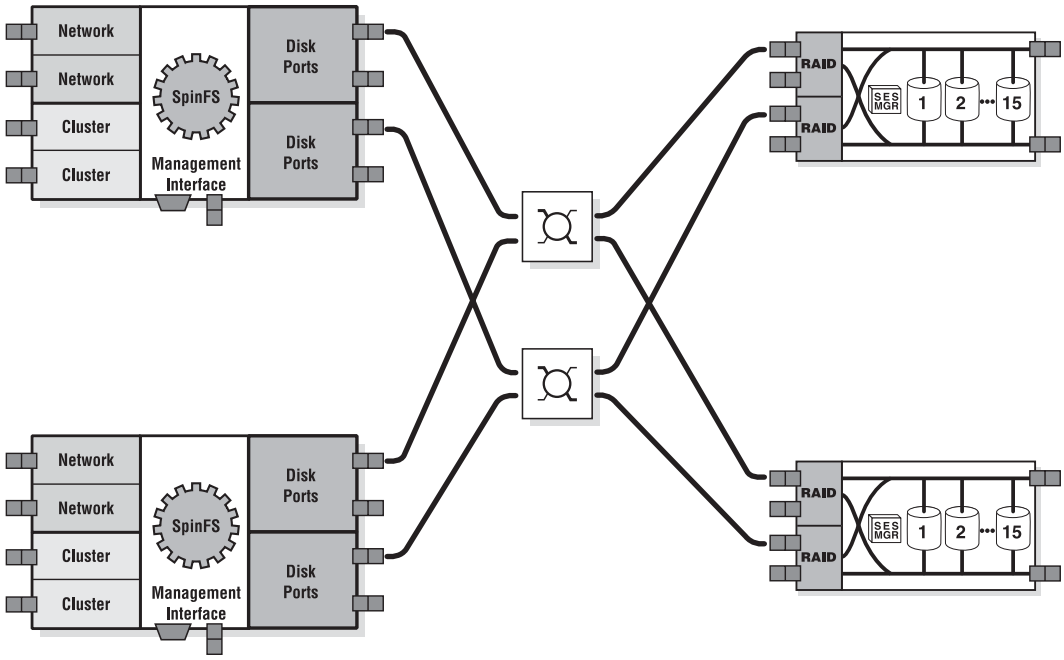

Figure 4-9. High availability with two SpinServers and two SpinStor RAID disk enclosures

High Availability with Two SpinServers, Four SpinStor RAIDs, and Two Switches

In this fourth HA configuration example, loop switches are each divided into zones to allow the two SpinServers to connect to the four SpinStor RAID controllers. A zoned switch is physically one switch chassis, but it is configured logically to do the work of two switches. With four switch zones, it is possible to use all four SpinServer ports and adhere to the requirement that there must be exactly one path from each SpinServer to each SpinStor RAID controller. Even though all of the SpinServer disk ports are used, only two of each of the SpinStor RAID enclosure ports are used. This has little effect on reliability.

This configuration meets all resiliency requirements for HA. By using the two zoned loop switches, this configuration can lose any one disk port pair, Fibre Channel connection, or loop switch and continue to maintain robust and redundant system connectivity.

For expandability, storage capacity can be added until the limit of 22 TB per SpinServer is reached.

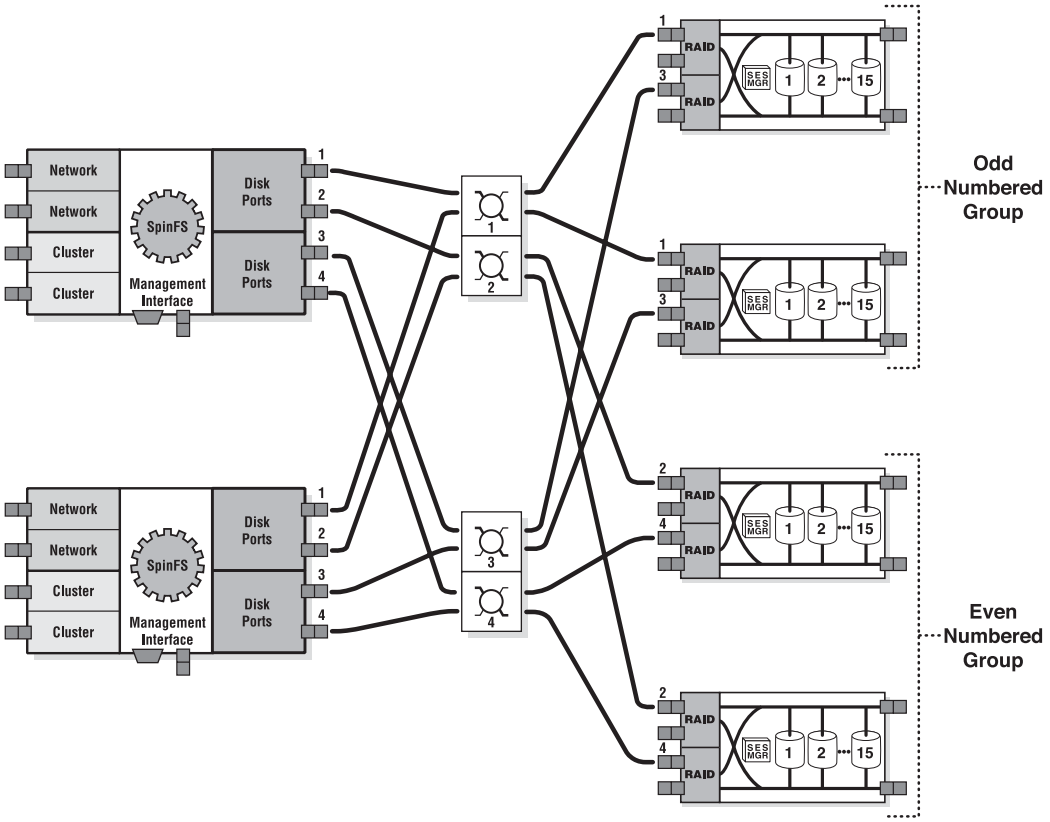

Figure 4-10. High availability with two SpinServers and four SpinStor RAID disk enclosures

4.4 Designing Topologies for Expandability

It is important to use a standard pattern for component connectivity when designing a system for expandability. If you have such a standard pattern, adding new connections is simple and orderly. All of the preceding examples follow the guidelines given here.

A properly designed topology for an HA system follows these guidelines:

- There is exactly one path from each SpinServer to each SpinStor RAID controller. This is a requirement.
- There are two paths from each SpinServer to each SpinStor, one to each of the RAID controllers.
- Each path uses a SpinServer port from one of the two pairs of disk ports, and the other path uses a port from the other pair.
- Each path uses a different loop switch.

If these guidelines are followed, the failure of a pair of disk ports, any single Fibre Channel cable, or even an entire loop switch does not prevent the SpinServers from continuing to access the SpinStor RAID enclosures.

Assigning IDs to SpinServer System Components

To prepare for the orderly expansion of the previous HA example, numeric labels are added to the Fibre Channel ports and switch zones as shown in Figure 4-11.

The two SpinServers have their four disk ports numbered, in order, 1 through 4. The zones in the two switches are also numbered 1 through 4.

The SpinStor RAID enclosures are divided into two groups, one with the RAID controllers numbered with odd numbers and the other with the RAID controllers numbered with even numbers. As noted earlier, only one of each of the RAID controller's pair of ports is used in this configuration.

For each SpinServer, the disk port numbered 1 is connected to the zone numbered 1, port 2 is connected to zone 2, and so on as shown in Figure 4-11.

For the SpinStor RAID chassis, RAID controller 1 is connected to the zone numbered 1 using only one Fibre Channel cable, and so on in orderly progression for the other SpinStor RAID controllers as shown in Figure 4-11.

This topology design meets all the HA guidelines that are described above.

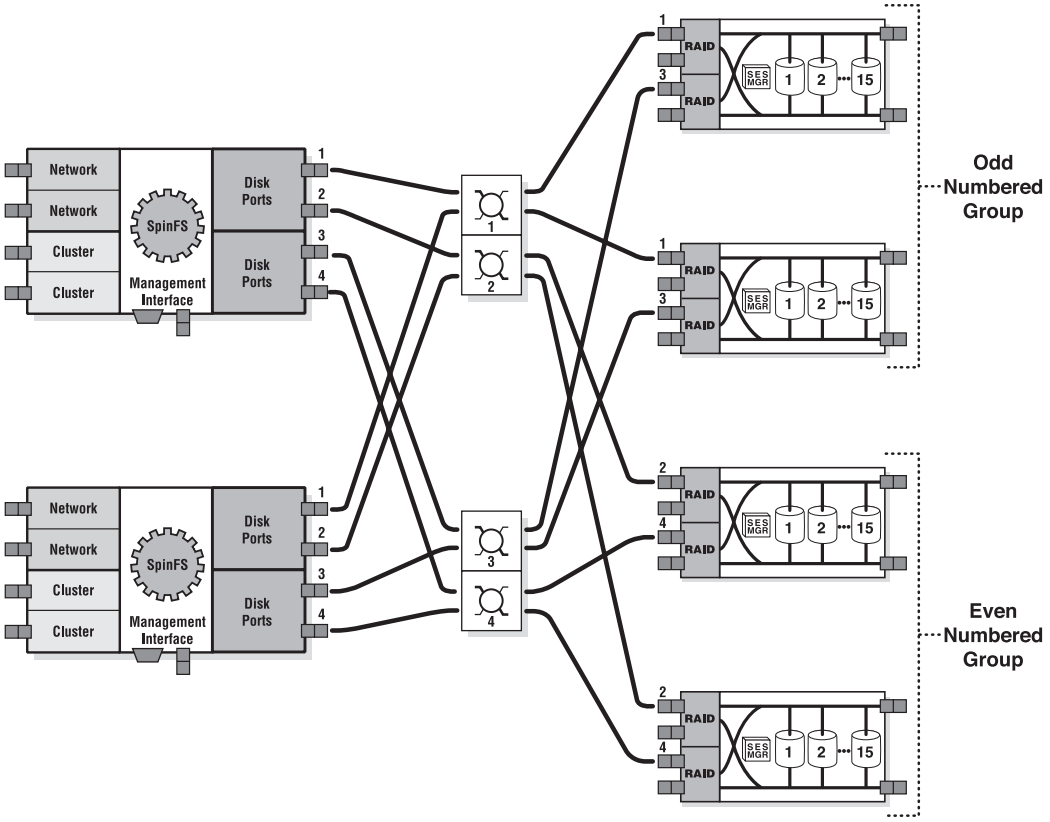

Figure 4-11. Assigning IDs to the SpinServer system components in the topology design.

Expanding the Topology

To expand the system illustrated in Figure 4-11, a third SpinServer can be added and its

disk ports are again numbered 1 through 4. Connect the numbered ports to the zones with the same numbers as described above. Additional SpinServers can be added in exactly the same manner.

When adding a fifth SpinStor RAID enclosure, place it in the odd-numbered group and number its RAID controllers 1 and 3. Those RAID controllers are connected to the switch zones numbered 1 and 3, respectively, connecting only one of each RAID controller's ports.

To add a sixth SpinStor RAID enclosure, place it in the even-numbered group and number its RAID controllers 2 and 4. Those RAID controllers are connected to the switch zones numbered 2 and 4, respectively, again connecting only one of each RAID controllers ports.

Additional SpinStors are added in the same manner, alternately adding them to the odd numbered and even numbered groups.

As components are added, the zoned loop switches can run out of ports. When that happens, each zone can be replaced with an independent loop switch, doubling the number of available ports.

Using these expansion guidelines, additional SpinServers and SpinStor RAID enclosures can be added easily, and the many connections among system components can quickly be accomplished.

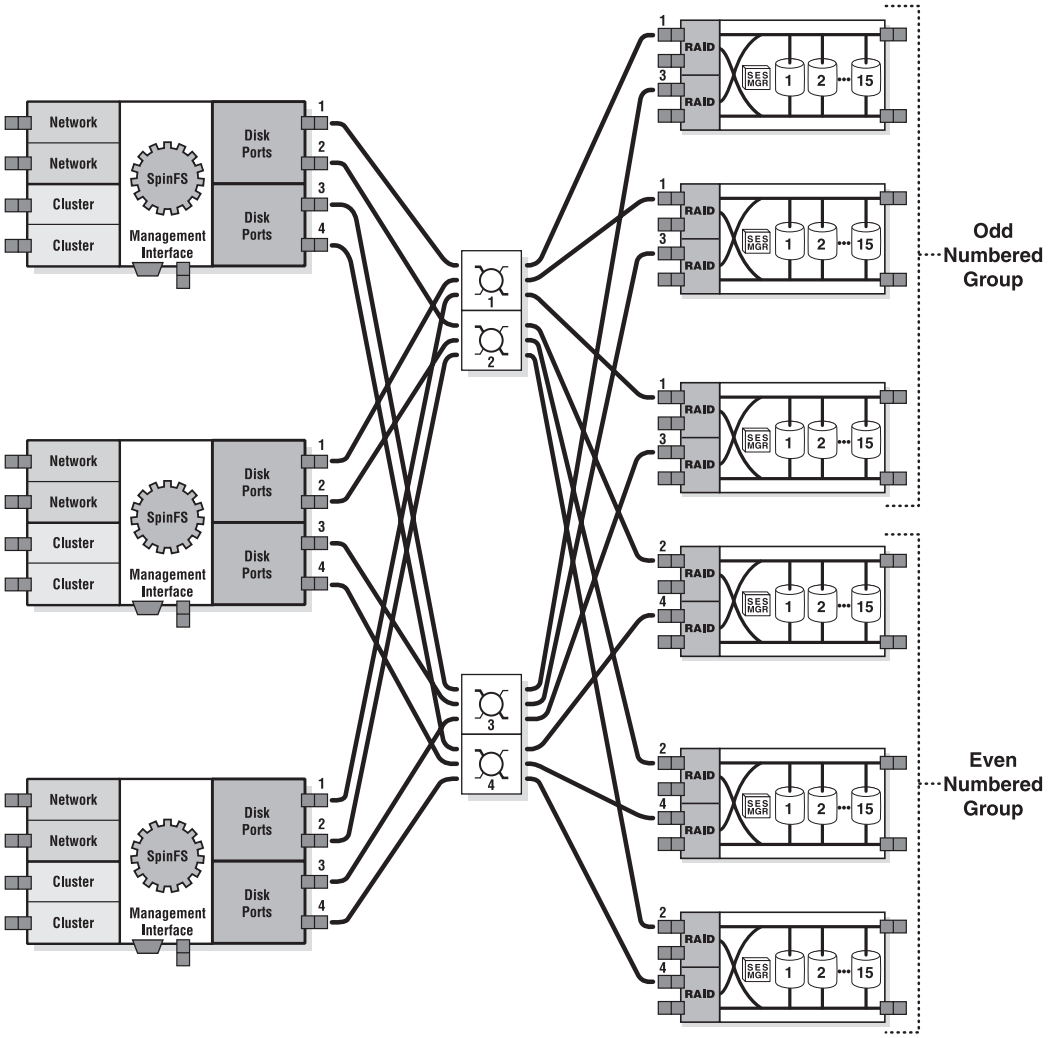

Figure 4-12. Expanding the topology to include an additional SpinServer and two additional SpinStor RAID enclosures

4.5 Unpacking and Handling Components

To prevent damage to the components and avoid injury, you must carefully unpack and handle the SpinServer chassis and SpinStor enclosures.

Inspect the box the components were shipped in and note whether the components were damaged in any way. If the components show evidence of damage, file a damage claim with the carrier who delivered it.

4.6 Product Guidelines

Guidelines for safe handling and maintenance of the SpinServer components are listed in this section.

Static Electrical Discharge Precautions

Static electricity is generated when two objects with different electrical charges come into contact with each other. An electrostatic discharge (ESD) is created to neutralize this difference. Electronic devices can be severely damaged by ESD.

To prevent damage to the equipment from ESD, follow these precautions:

- Do not unpack or install electronic equipment without using a properly grounded wrist or heel strap. Spinnaker Networks provides a disposable wrist strap with all new equipment purchases.
- Keep all electronic assemblies such as printed circuit boards (PCBs) and disk drives in their original ESD-protective packaging until you are ready to install them.
- Handle all electronic assemblies carefully. Do not touch connectors, contacts, or component leads.
- Ensure that electronic assemblies do not come in contact with insulators such as clothing and plastics.

Laser Radiation Precautions

The SpinServer and the SpinStor emit invisible laser radiation.

Warning: CLASS 1 LASER PRODUCT

Warnung: LASER KLASSE 1 PRODUKT

Warning: Lasers emit invisible radiation from the aperture opening when no fiber-optic cable is connected. When removing cables, do not stare into the open apertures. In addition, install protective aperture covers to fiber ports with no cable connected.

Warnung: Laser strahlen unsichtbare Strahlung von der Blendonöffnung Öffnung aus, wenn kein Glasfaserkabel angeschlossen wird. Wenn Sie Kabel löschen, starren Sie nicht in die geöffneten Blendenöffnungen an. Zusätzlich installieren Sie schützende Blendenöffnung Abdeckungen zu den Faserkanälen ohne das angeschlossene Kabel.

Electrical Precautions

To prevent serious damage to yourself and the SpinServer components, always observe basic electrical precautions, including the following:

- Use only one hand when working with powered-on electrical equipment. This is to avoid making a complete circuit, which causes electrical shock. Use extreme caution when using metal tools, which can easily damage any electrical components or circuit boards they touch.
- Do not use mats designed to decrease static electrical discharge as protection from electrical shock. Instead, use rubber mats that have been specifically designed as electrical insulators.
- Call the Spinnaker Technical Assistance Center when the battery near the DIMM modules in the SpinServer chassis, which maintains clock settings during power failure, needs to be replaced. Improper installation causes damage to the equipment.

Caution: There is a risk of explosion if the battery is replaced by an incorrect type. Dispose of used batteries according to the instructions.

Electrical Warnings

To prevent serious injury to yourself and damage to the SpinServer components, always observe the following electrical warnings:

Warning: Never apply AC power to, or operate, equipment without proper earth grounding. Equipment installations must comply with all applicable local, state, and national electrical codes and regulations. Contact a qualified electrician if you are unsure about the proper earth grounding of equipment, power distribution units (PDU), and equipment racks.

Warnung: Keinen Netzstrom anlegen oder das Gerät nicht betreiben, wenn keine vorschriftsmäßige Erdung vorhanden ist. Alle Geräte müssen gemäß den anwendbaren Bestimmungen für elektrische Installationen installiert werden. Wenden Sie sich an einen qualifizierten Elektriker, wenn Sie sich über die ordnungsgemäße Erdung des Geräts, der Stromverteilungen und der Geräteracks nicht sicher sind.

Warning: Due to leakage current accumulation, Spinnaker Networks recommends that industrial locking type plugs and receptacles are used for power strips, PDUs, and UPSs that supply power to multiple pieces of equipment. These types of robust connections ensure the integrity of the protective earth ground.

Warnung: Aufgrund des Leckstromaufkommens empfiehlt Spinnaker Networks die Verwendung von verschließbaren Industriesteckern und Steckdosen für Anschlussleisten, Stromverteilungen und unterbrechungsfreie Stromversorgungen, die mehrere Geräte mit Strom versorgen. Durch diese robusten Anschlüsse wird eine vollkommene Schutzerdung gewährleistet.

Warning: Power distribution, earth grounding systems, equipment, and equipment rack installations must comply with all applicable local, state, and national electrical codes and regulations.

Warnung: Stromverteiler, Erdungssysteme, Geräte und Geräteracks müssen gemäß den anwendbaren Bestimmungen für elektrische Installationen installiert werden.

Warning: Always connect Spinnaker Networks AC line-powered equipment only to TN type power systems.

Warnung: Mit Wechselstrom gespeiste Spinnaker Networks Geräte dürfen nur an TN-Netzsysteme angeschlossen werden.

Warning: To prevent injury when performing maintenance on a powered-down SpinServer, disconnect the power cords from all AC inlets before opening the cover of a server chassis.

Warnung: Um Verletzungen bei Wartungsarbeiten an einem ausgeschalteten SpinServer zu vermeiden, die Netzkabel vor dem Öffnen der Server-Chassis-Abdeckung aus den Netzsteckdosen herausziehen.

Warning: Be aware of the locations of the power on/off switch on the chassis, as well as the room's emergency power off switch, disconnection switch, or electrical outlet. If an electrical accident occurs, quickly remove power from the system.

Warnung: Personen, die mit dem System arbeiten, müssen wissen, wo sich der Netzschalter am Chassis, der Notausschalter im Raum, der Trennschalter und die Steckdose befinden. Bei einem Stromunfall muss das System sofort ausgesteckt werden.

Warning: When working with high voltage components or exposed electrical circuits, do not work alone. Be sure to have another person nearby who is familiar with the power controls to switch off the power if necessary.

Warnung: Beim Arbeiten an Hochspannungskomponenten oder freigelegten Stromkreisen niemals alleine arbeiten. Es sollte stets eine zweite Person anwesend sein, die mit den Leistungsschaltern vertraut ist und das Gerät im Notfall ausschalten kann.

Warning: Use only power cords with a grounding plug. Always plug the cords into grounded electrical outlets.

Warnung: Nur Netzkabel mit Schukosteckern verwenden. Die Kabel müssen in eine vorschriftsmäßig geerdete Schukokosteckdose eingesteckt werden.

Warning: Spinnaker Networks SpinServer and SpinStor products have *Power-On/Standby* power switches. *Power-On/Standby* power switches, when in the *Standby* position, do not completely remove AC power from the equipment. For equipment with this type of power switch, the AC power cords serve as the main disconnect device. When performing maintenance that requires the equipment to be completely powered down, put the power switch in the *Standby* position, and remove all power cords from the equipment.

Warnung: Die Netzschalter der SpinServer- und SpinStor-Produkte von Spinnaker Networks verfügen über eine *Einschalt- und eine Bereitschaftsstellung*. Wenn dieser*Ein-/Bereitschaftsschalter* auf *Bereitschaft (Standby)* steht, darf die Netzstromversorgung nicht vollständig getrennt werden. Bei Geräten mit dieser Art von Netzschalter, wird die Stromversorgung durch Herausziehen des Netzkabels getrennt. Wenn Wartungsarbeiten durchgeführt werden, die ein komplettes Ausschalten des Geräts erfordern, den Schalter auf *Bereitschaft* stellen und dann alle Netzkabel herausziehen.

Warning: Some equipment is provided with multiple power cords. To disconnect all power from the equipment, remove all power cords.

Warnung: Einige Geräte verfügen über mehrere Stromkabel. Um die Stromversorgung vollständig zu trennen, müssen alle Stromkabel herausgezogen werden.

Warning: To avoid potential burns, remove all chains, rings, watches, and other metal jewelry when performing maintenance on powered-on equipment. Burns can be caused by the flow of current through a metallic object if the metallic object comes in contact with powered circuits.

Warnung: Um potentielle Verbrennungen bei Wartungsarbeiten an eingeschalteten Geräten zu vermeiden, müssen Kettchen, Ringe Armbanduhren und andere Metallobjekte vorher abgenommen werden. Derartige Verbrennungen können durch Stromfluss durch Metallobjekte entstehen, wenn diese mit den unter Strom stehenden Schaltkreisen in Kontakt kommen.

Warning: The power supply units for SpinStor products have detachable power cords. Disconnect the power cord at the power supply unit before removing the power supply unit from the enclosure. When installing a power supply unit, insert the power supply unit into the enclosure before connecting the power cord.

Warnung: Die Netzteile für SpinStor-Produkte sind mit abnehmbaren Stromkabeln ausgestattet. Das Stromkabel zuerst vom Netzteil herausziehen und dann das Netzteil aus dem Gehäuse entfernen. Beim Installieren eines Netzteils muss dieses zuerst in das Gehäuse eingesetzt und dann das Netzkabel angeschlossen werden.

SpinServer System Precautions

To ensure general safety, follow these guidelines.

- Keep the area around the SpinServer system clean and free of clutter.
- When servicing the SpinServer, place the server chassis top cover, and any system components that have been removed, in a safe location to avoid damaging them.
- Use a UPS to protect the SpinServer from power surges and voltage spikes and to keep the system operating in the event of a power failure.
- Do not wear jewelry or other metal objects that are excellent conductors. If such items come into contact with circuit boards or areas where power is present, a short circuit can be created.
- Before replacing any components that are not hot swappable, power down the SpinServer and disconnect all AC power cords. After accessing the interior of the SpinServer, close the top cover securely, slide the chassis back into position, and fasten the screws on the front panel to the rack.

SpinServer System Warnings

To prevent serious injury to yourself and damage to the SpinServer components, always observe the following warnings:

Warning: During normal operations, the internal components of the SpinServer and SpinStor become hot. During service operations, avoid touching hot surfaces.

Warnung: Bei normalem Betrieb werden die internen SpinServer- und SpinStor-Komponenten heiß. Die heißen Oberflächen während der Reparaturarbeiten nicht berühren.

Warning: To prevent personal injury, always allow the blowers to spin down before removing the blower assembly.

Warnung: Um Verletzungen zu vermeiden, sollte vor dem Entfernen der Gebläsebaugruppe gewartet werden, bis das Gebläse zum Stillstand gekommen ist.

Warning: To prevent personal injury, always allow the fans to spin down before removing the fan assembly.

Warnung: Um Verletzungen zu vermeiden, sollte vor dem Entfernen der Ventilatorbaugruppe gewartet werden, bis die Ventilatoren zum Stillstand gekommen sind.

Rack Precautions and Warnings

The equipment rack must be placed in an area that is clean, dust free, and carefully ventilated. Avoid any areas where heat, electrical noise, or electromagnetic fields are generated. Be sure to place the rack near separately fused, grounded power outlets to accommodate the redundant power supplies in the components.

Always follow these rack precautions and warnings:

- After the rack is moved to its permanent location, the leveling jacks on the bottom of the rack must be fully extended to the floor with the full weight of the rack resting on them.
- In a single rack installation, an anti-tip plate must be attached to the rack.

Figure 4-13. A single rack installation requires the attachment of the anti-tip plate

Warning: To reduce the risk of personal injury or damage to equipment, it is important to install heavy components first and install them at or near the bottom of the rack.

Warnung: Um die Gefahr von Verletzungen oder Schäden am Gerät zu reduzieren, müssen schwere Komponenten zuerst unten im Rack bzw. in die unteren Einschübe eingesetzt werden.

Part III: Hardware Installation

Part III includes the following chapters:

Chapter 5: Setting Up the Rack

Chapter 5 provides information about unpacking and setting up the equipment rack. See page 51.

Chapter 6: Installing the UPS

Chapter 6 provides information about installing the UPS in the equipment rack. See page 73.

Chapter 7: Installing the SpinServer

Chapter 7 provides information about installing the SpinServer in the equipment rack. See page 75.

Chapter 8: Installing the SpinStor

Chapter 8 provides information about installing the SpinStor in the equipment rack. See page 87.

Chapter 9: Setting Disk IDs and Installing Cables

Chapter 9 provides detailed information about setting the IDs for the SpinStor JBOD disk enclosures and basic instructions for installing cables to connect SpinServer system components. See page 97.

Chapter 10: Clustering and HA Connections

Chapter 10 provides information and illustration examples demonstrating the physical connections needed to set up the SpinServer system components for clustering and HA. See page 109.

Chapter 11: Power Connections

Chapter 11 provides information and illustration examples demonstrating power connections for the SpinServer system components. See page 115.

Chapter 12: Powering Up the System

Chapter 12 provides information about powering up the SpinServer system components. See page 123.

Chapter 13: Powering Down the System

Chapter 13 provides information about powering down the SpinServer system components. See page 129.

5.0 Setting Up the Rack

This chapter discusses the equipment racks used for your SpinServer system's equipment.

When installing equipment in the rack, always observe these safety warnings:

Warning: Extend only one rack component at a time. Extending two or more rack components simultaneously can cause the rack to become unstable and tip over, causing serious injury and damage to equipment.

Warnung: Jeweils nur eine Rackkomponente herausziehen. Wenn zwei oder mehrere Rackkomponenten herausgezogen werden, kann das Rack umkippen und schwere Verletzungen sowie Schäden am Gerät verursachen.

Warning: To reduce the risk of personal injury or damage to equipment, it is important to install heavy components first and install them at or near the bottom of the rack.

Warnung: Um die Gefahr von Verletzungen oder Schäden am Gerät zu reduzieren, müssen schwere Komponenten zuerst unten im Rack bzw. in die unteren Einschübe eingesetzt werden.

5.1 Equipment Racks

Spinnaker Racks

Your Spinnaker racks have the following functional and safety features:

- The width and depth dimensions are sufficient to accommodate the SpinServer components. The depth of the rack is 36 inches, and the mounting flanges conform with EIA-310-D and IEC 297 standards for a 19 inch rack.
- The holes in the interior vertical rack rails are standard 3/8-inch square holes.
- Interior vertical rack rail holes are positioned along standard Unit (U) intervals (1 U = 1.75 inches). Each unit of vertical space comprises three holes that conform with universal spacing as detailed in the EIA-310-D standards.An anti-tip plate can be

attached to prevent the rack from tipping when fully loaded.

- The rack can hold 42U of equipment.
- The overall height of the rack with casters is 80 inches.
- The load capacity of the rack is sufficient to handle the weight of the components even when completely loaded with SpinServer components.
- Both rack casters and rack levelers are provided to ensure ease of movement and to position the rack safely when it is placed in a permanent location.
- The rack is provided with locking doors and side panels.
- The rack can be ordered as a 120VAC rack or as a 208VAC rack.

Figure 5-1. A Spinnaker rack with functional and safety features

Non-Spinnaker Racks

If you supply your own equipment rack, it must meet the functional and safety features listed above and conform to the following standards:

- International Electrotechnical Commission (IEC) standards: 297-1 and 297-2. For further information about the IEC standards, see the web site www.iec.ch.
- Electronics Industries Association (EIA) standard: EIA-310-D.

5.2 Designing the Rack Layout

It is important to design your equipment rack layout before you begin the process of setting up the rack and installing the SpinServer components. This preliminary design work allows you to make the best use of the rack space and features. Make a sketch or a spreadsheet of the layout design for each rack and the equipment to be installed in it.

Unit Size

The height of the equipment to be installed in an equipment rack in measured in units (U). As shown in this illustration, each 1U is equal to three holes on the rack's vertical rails and 1.75 inches or 4.45 cm.

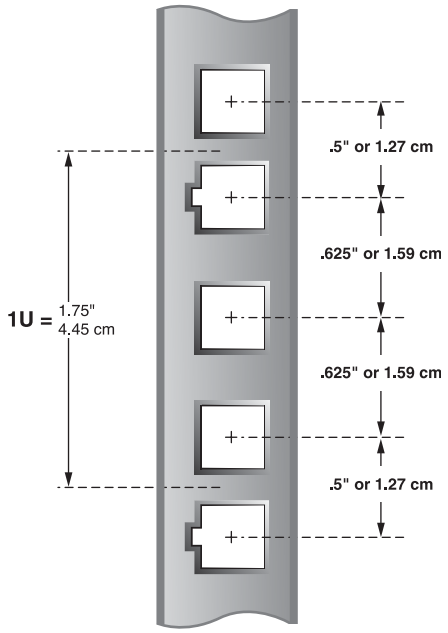

Figure 5-2. This illustration demonstrates the relationship between rack units (U) and inches or centimeters.

Rack-Mounting Templates

Rack-mounting templates for the SpinServer and the SpinStor are included in the packing boxes. Use these templates to design your layout.

The SpinServer template indicates the height of the SpinServer, the number of rack holes that are used for that height, and the position to attach the slide assemblies. The SpinStor template indicates the height of the SpinStor, the number of rack holes that are used for that height, and the position to attach the shelf assemblies.

Note: The SpinServer chassis slides and the SpinStor enclosure shelves are shorter in height than the chassis themselves. You must plan your layout design to correctly position the slide assembly and SpinStor enclosure shelf-installation kits while still providing sufficient vertical space to accommodate the chassis.

Single Rack Layout

When developing a rack layout design using a single rack, position your system's equipment in the rack to make the rack stable and to minimize rack space that is left unused at the top or the bottom of the rack.

You must also take into consideration the aggregate power distribution and heat dissipation requirements of the SpinServer system components that is to be installed in the rack. Refer to the chapter "Product Specifications and Requirements" on page 13 to review the power and environmental requirements for each component that is to be installed in the rack. From this data, you can develop the aggregate requirements. See the chapter "Setting Disk IDs and Installing Cables" on page 97 for additional information.

Multiple Rack Layout

If your system includes more equipment than can be installed in one rack, the first step in designing a rack layout is to divide your equipment into equipment groups that best serve your needs. One possible layout design installs all SpinServers and UPSs in one rack and all SpinStor RAID and JBOD enclosures in a second rack. Another possible layout design follows the layout illustrations in this chapter and installs the equipment as a balanced number of SpinServers and SpinStors in each rack.

After designing the rack layouts for a multiple rack system, assign a rack ID to each rack by giving the rack a name or a number.

Rack Voltage

If you are using a Spinnaker rack, you must select the AC voltage that is to be used within the rack. Spinnaker racks can be ordered as a 120VAC rack or a 208VAC rack. The rack voltage is determined by the type of power distribution unit (PDU) that is preinstalled in the rack.

If your rack layout includes one or two SpinServers, the 120VAC rack provides adequate power. For a rack layout with three SpinServers, you must use a 208VAC rack to provide adequate power.

Important: If these voltages are not compatible with your installation, contact the Spinnaker Technical Assistance Center.

Rack PDUs

As shown in the following illustration, the Spinnaker rack has four PDUs and each PDU has a circuit breaker.

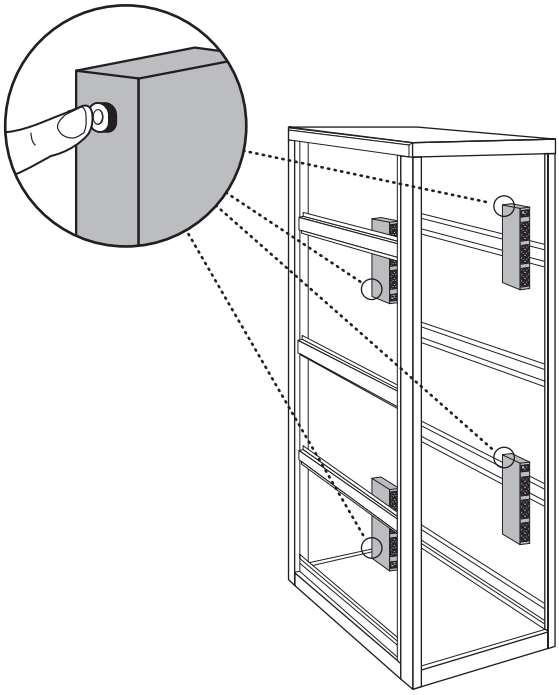

Figure 5-3. Spinnaker rack with PDUs

A circuit breaker is tripped if there is a power overload. To reset the circuit breaker, press the button on the PDU.

Note: If access is limited to the circuit breaker from the rear of the rack, remove the side panel of the rack to reach the circuit breaker button.

SpinServer Components in the Rack Layout Design

When designing a rack layout, use the following information about the SpinServer, SpinStor, and UPS to create a design that efficiently uses the rack space.

SpinServer

When designing your equipment rack layout, consider the positioning of the SpinServer components in the rack first. For ease of use, position the server chassis in the midsection of the rack. This allows you to easily remove the cover and access the interior of the chassis when maintenance is required. As shown in the following illustration, the SpinServer requires 4U of vertical space in the rack.

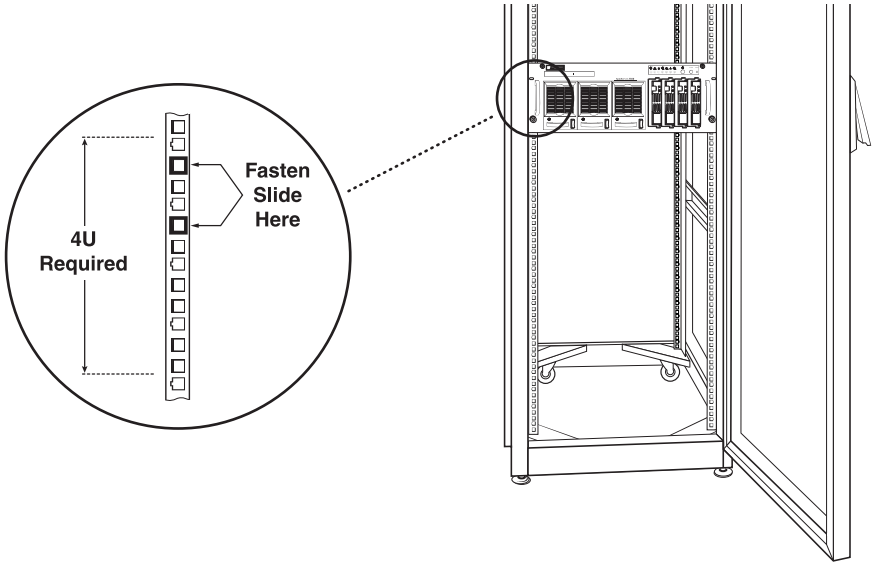

Figure 5-4. The SpinServer requires 4U of vertical rack space.

Each SpinServer in your layout design must be attached to a UPS. If you are designing your rack layout to include more than one SpinServer, your layout design must include a UPS for each SpinServer in the rack.

For layout designs that include one or two SpinServers and two to four SpinStors, the 120-volt UPS can be used.

Try to position the SpinServers in the rack to minimize the need to relocate the SpinServers and SpinStors when expanding the system. With this in mind, it is important to note that the U-spacing between the bottom of the lowest SpinStor enclosure (3U) and the top of the upper 120-volt UPS (2U) is not a multiple of 3U. This means that you must relocate the SpinServers in the rack to avoid wasting rack space if you increase your storage capacity by adding additional SpinStor enclosures.

For layout designs that include more than two SpinServers and an equal number of SpinStor RAID enclosures, the 208-volt UPS (3U) must be used and the Spinnaker rack with the 208-volt PDU is needed.

SpinStor

A fully loaded SpinStor enclosure is very heavy (approximately 88 pounds). If possible, place the disk enclosure low in the rack or evenly distribute these components above and below the server chassis. For example, if there are two disk enclosures, place one above the server and one below, or place both below the server.

If there are three SpinStor enclosures, place one above the server and two below, or place all three below the server if there is sufficient rack space.

Each SpinStor enclosure requires 3U of rack space. The disk enclosure can be placed above or below the SpinServer in the rack.

Note: The enclosure shelf assemblies for the disk enclosure installation are shorter in height than the disk enclosure itself. A full 3U of vertical height for the disk enclosure is required.

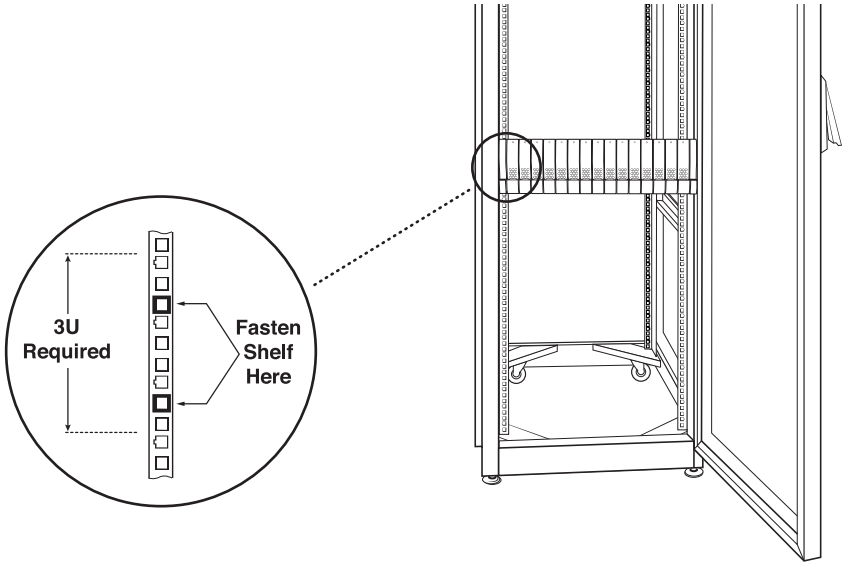

Figure 5-5. The disk enclosure requires 3U of vertical rack space.

UPS

Despite its low height (2U for the 120 volt and 3U for the 208 volt), the UPS is heavy. It must be placed at the bottom of the rack.

UPS, 120 volt

As shown in the following figure, because of its weight, the 120-volt UPS is placed at the bottom of the rack and requires 2U of rack space.

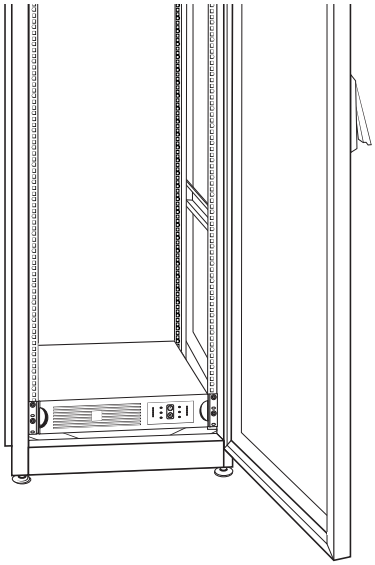

Figure 5-6. The UPS is placed at the bottom of the rack. The 120-volt UPS requires 2U of vertical rack space.

UPS, 208 Volt

Because of its weight, the 208-volt UPS is also placed at the bottom of the rack. It requires 3U of rack space.

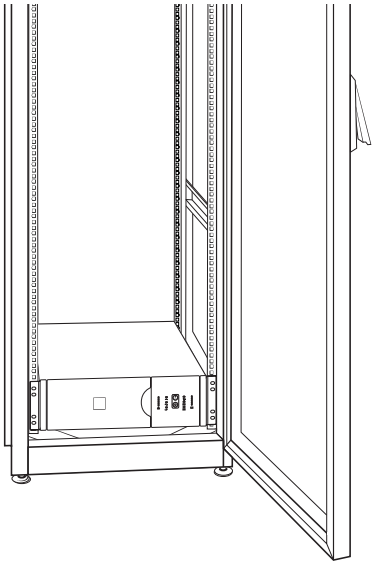

Figure 5-7. The UPS is placed at the bottom of the rack. The 208-volt UPS requires 3U of vertical rack space.

Layout Examples

The following illustrations demonstrate equipment rack layouts that provide easy access to the server chassis and adhere to the safety guidelines for evenly distributing the weight of the equipment in the rack.

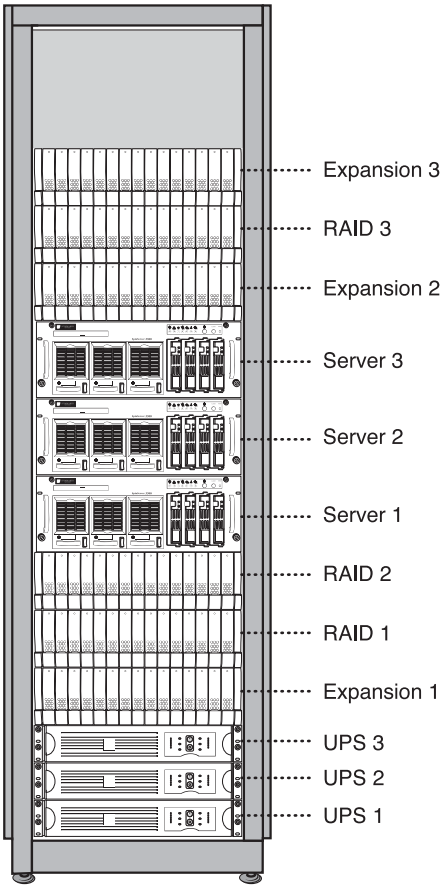

Figure 5-8. A recommended rack layout design with 120-volt UPSs

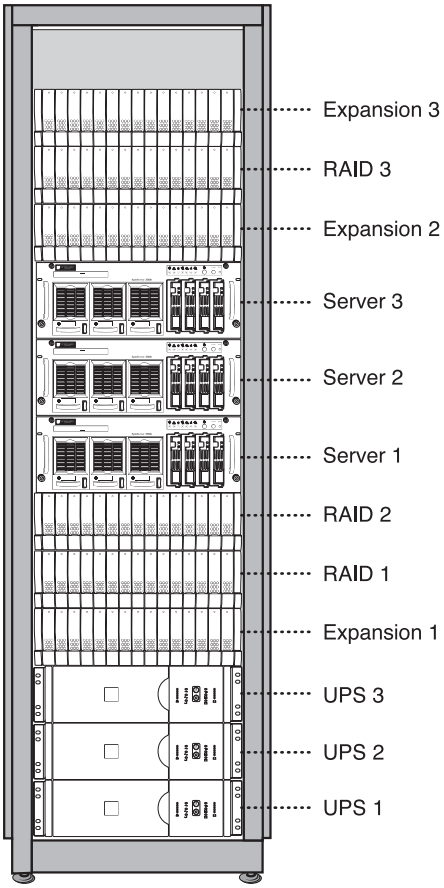

Figure 5-9. A recommended rack layout design with 208-volt UPSs

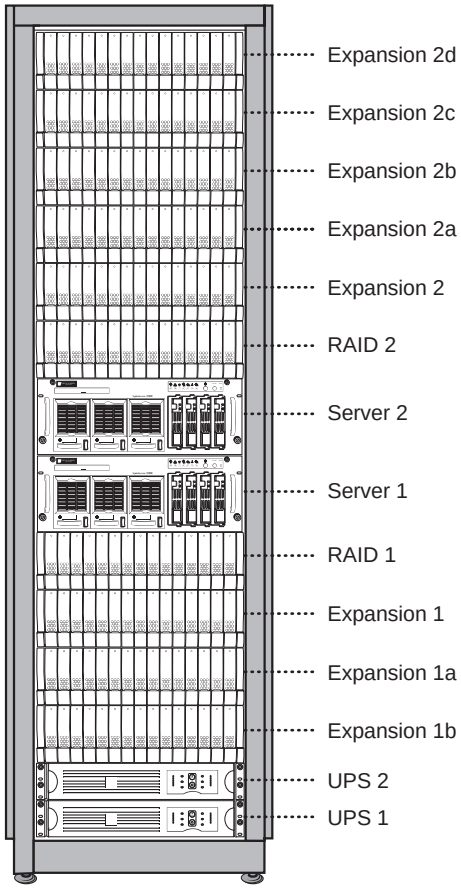

Figure 5-10. Another recommended rack layout design with 120-volt UPSs

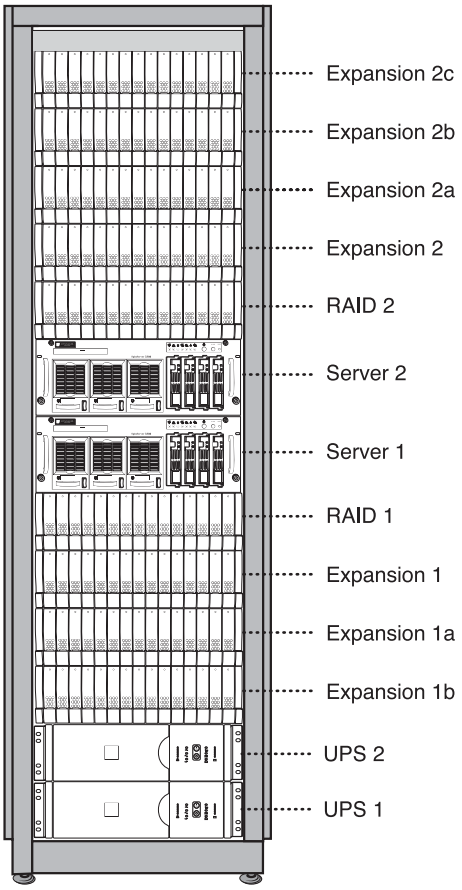

Figure 5-11. Another recommended rack layout design with 208-volt UPSs

5.3 Setting Up a Spinnaker Rack

To set up a Spinnaker rack, follow these basic steps. Each of the steps involves several substeps, which are discussed in detail in the following sections.

1. Unpack the rack
2. Remove the front and back doors and side panels from the rack.
3. Remove the rack from the pallet.
4. Adjust the position of the vertical rack rails.
5. Mark the positions of components on the rack.

Unpacking the Rack

To unpack the rack, follow these steps and cautions:

1. Before unpacking the rack, inspect the rack packaging for any signs of damage that occurred during shipment.

2. When unpacking the rack, take care to prevent scratching the surfaces of the rack.

3. After removing the shrink wrap, remove the other protective packing materials that are wrapped around the rack.

4. Inspect the entire rack for damage. If the rack shows any damage, immediately contact your carrier.

Removing Rack Doors

To remove the doors from the rack, follow these steps:

1. Locate a temporary storage area for the doors where they cannot slide or accidentally fall over, causing possible injury to workers or damage to the doors.

2. Press the keyhole push-button and pull the handle towards you. Rotate the handle to the right (clockwise) and pull open the door.

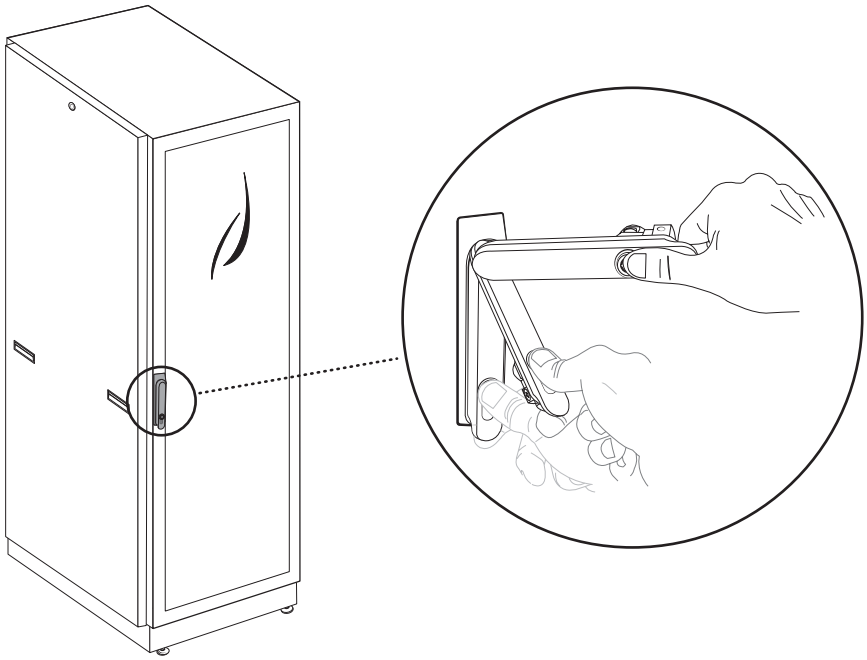

Figure 5-12. This illustration demonstrates the rotating handle on the doors of Spinnaker racks.

3. With the door open approximately 30°, lift the door up to clear the three hinge pins, and carefully pull the door away from the hinge pins and the rack.

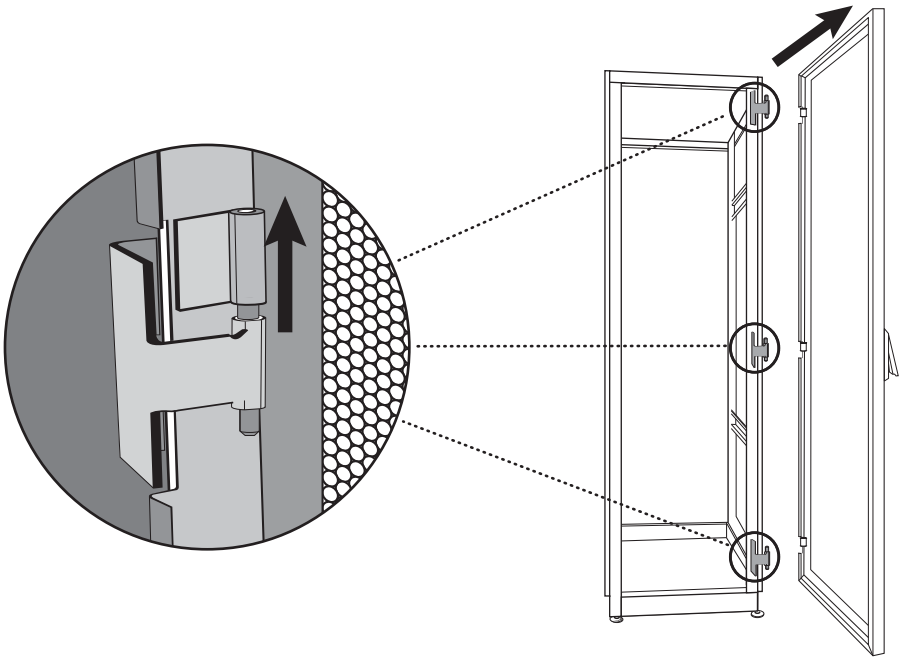

Figure 5-13. Lift the door up and away from the hinge pins.

4. Store the doors in the safe location until you are ready to replace them.

Removing Side Panels

After removing the front and back doors of the rack, remove the side panels.

1. To remove the panels, remove the two screws that secure the panels during shipment. These two screws are tagged with notices that they must be removed. One screw is at the top of each side panel, and the other is at the bottom of each side panel.

2. Remove the side panel keys from inside the rack and unlock the side panels. Place the keys in a safe location.

3. Grasping the side panel of the rack, pull it away from the rack to disengage the holding clips.

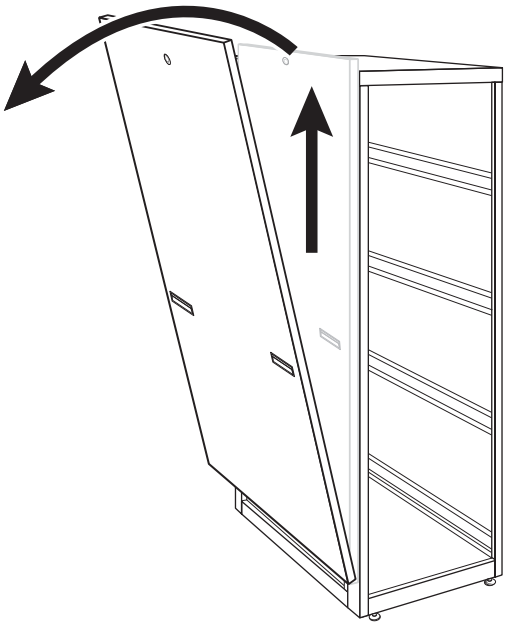

Figure 5-14. To remove the side panels of the Spinnaker racks, grasp the top of the panel and pull it away from the rack.

4. After removing both panels, place them in a safe location.

Removing Stabilizing Plates

There are two particle-board stabilizing plates that protect the structural integrity of the rack as it is shipped. Remove these plates by following these steps:

1. Remove the four screws that hold each plate in place.

2. Remove the plates from the rack.

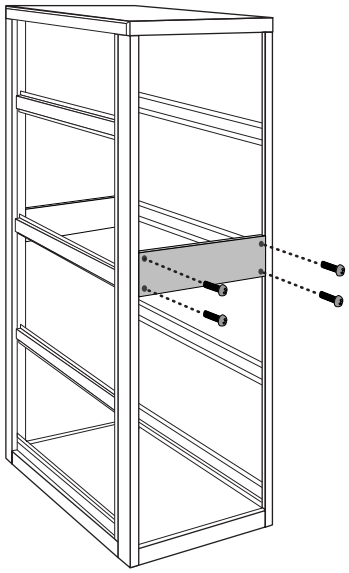

Figure 5-15. Remove the stabilizing plates from the rack.

3. Remove the four clip nuts that held the screws in place for each plate.

4. If the rack is not going to be reshipped to another location, the stabilizer plates can be discarded.

Removing the Rack from the Pallet

The rack is secured to the pallet by two large metal brackets. Follow these steps to remove the rack from the pallet.

1. Remove the screw from each bracket.

2. Remove both brackets from the rack and pallet.

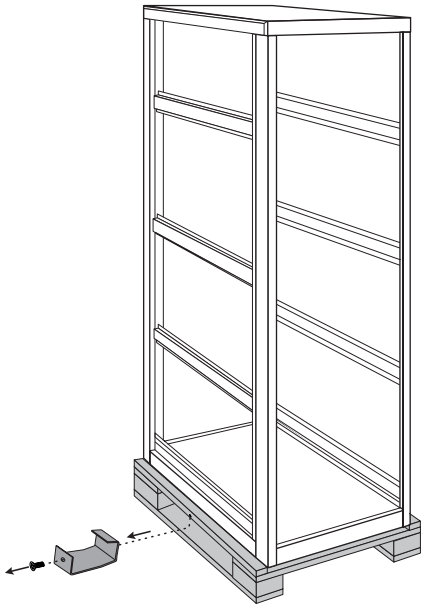

Figure 5-16. Remove the pallet brackets.

3. With at least two people working together, carefully lift the rack off the pallet and move it to the work area to begin installation of the SpinServer system equipment.

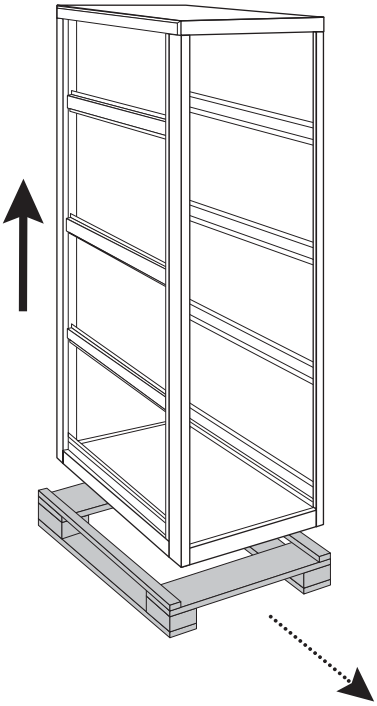

Figure 5-17. Lift the rack off the pallet and move the rack to the work area.

4. If the rack is not going to be reshipped to another location, the metal pallet brackets, screws, and pallet can be discarded.

Adjusting the Position of the Vertical Rack Rails

Your Spinnaker rack arrives with the vertical rack rails correctly positioned to accommodate the features of the SpinServer components.

The correct position of the vertical rack rails at the front of the rack is determined by the space needed to accommodate the handles on the front of the SpinServer components. The front vertical rack rails must be placed at least 1.25 inches back from the front of the rack so that the rack door can close without impacting the component handles.

The correct position of the vertical rack rails at the back of the rack is determined by the length of the bracket/slide assembly kits needed to accommodate the SpinServer components. The optimal location of the rear vertical rack rails is 29.5 inches from the front vertical rails. The rear vertical rack rails must be at least 28.5 inches from the front vertical rails and no more than 33.0 inches from the front vertical rails.

If you need to move the vertical rack rails, minor adjustments can be made by loosening the ten screws and sliding the rail approximately 0.5 inch in one direction or the other. After making the adjustment, retighten the screws.

For major adjustments of the vertical rack rail positions, follow these steps:

1. Remove the ten screws in one of the front vertical rack rails and place them in a safe location for use when reinstalling the vertical rack rail.

Note: Remove only one vertical rack rail at a time.

2. Remove the vertical rail from the rack.

3. Remove the ten clip nuts that hold the screws for each of the vertical rack rails. Determine the new vertical rack rail position and place the clip nuts in the correct positions for rail placement.

4. With the assistance of another person, place the vertical rail in the rack to correctly line up with the clip nuts and replace the ten screws to firmly hold the vertical rail in position.

5. Repeat Steps 1 – 4 for the other front vertical rack rail and then for the two rear vertical rack rails.

Marking the Positions of SpinServer Components

Refer to your rack layout design. Use the SpinServer chassis and SpinStor enclosure rack templates to mark with a colored marker or tape the positions of the server chassis and disk enclosures on the vertical rack rails.

5.4 Replacing Rack Side Panels

To replace the side panels, follow these steps:

1. Working with another person, align the side panels with the rack frame.
2. Set the bottom edge of the side panel on the rack frame and push the panel toward the rack to engage the holding clips.
3. Firmly press on the side panel near the lock to ensure that the side panel lock snaps into engagement.
4. Repeat Steps 1 – 3 for the other side panel.
5. Lock the side panels and place the side panel keys in a safe place.

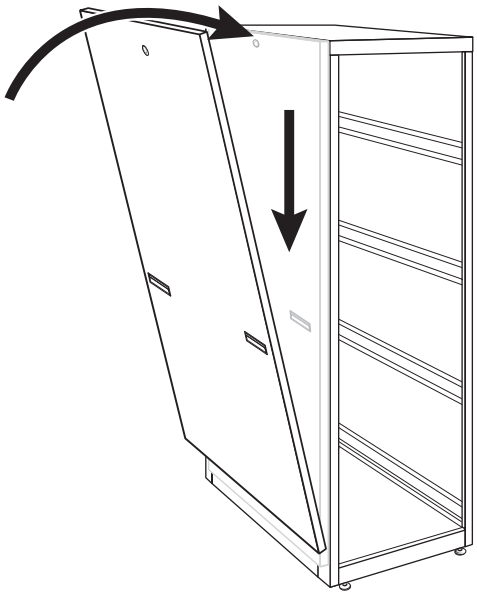

Figure 5-18. To replace the side panels on the Spinnaker racks, set the bottom of the panel onto the rack and push the top of the panel toward the rack.

5.5 Replacing Rack Doors

After the rack and equipment are in the permanent location and the rack has been leveled, retrieve the doors, one at a time, from the temporary storage. To replace the doors, follow these steps.

1. Lift the door up to position it over the three hinge pins and slide the door down onto the hinge pins.

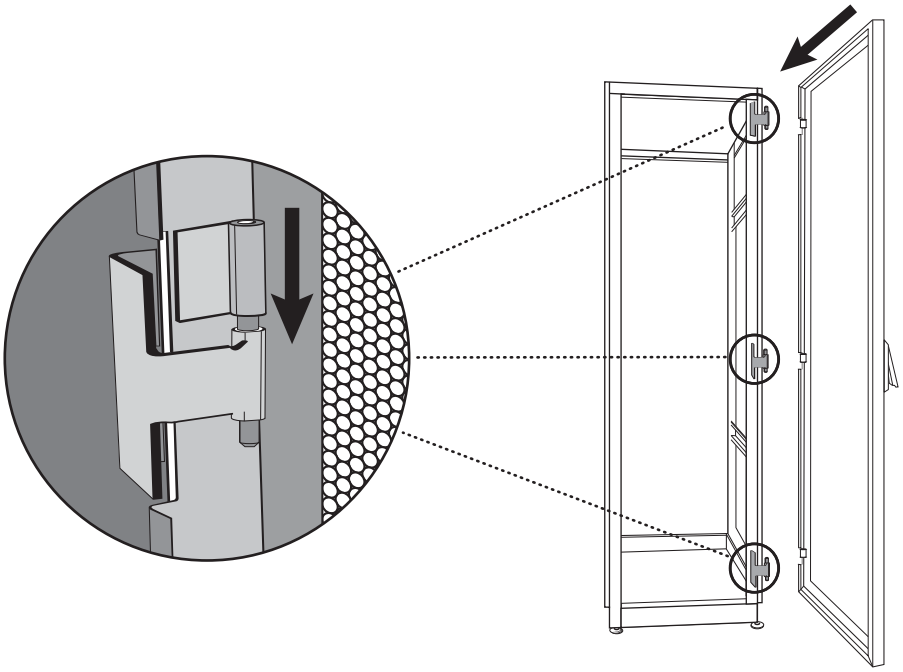

Figure 5-19. Position the door over the three hinge pins and pull down to seat the door on the hinges.

2. Carefully swing the door away from the rack to ensure that the door hangs straight and true.

Note: The rack doors can be replaced after you have installed all power cords and network cables. The instructions for cabling are included in the chapter “Setting Disk IDs and Installing Cables” on page 97.

5.6 Attaching Anti-Tip Plates

If the rack is freestanding, and not placed in a row of racks, the anti-tip plates must be attached. The rack is shipped with four anti-tip plates.

To attach the anti-tip plates, use the hardware included in the rack shipment. For each anti-tip plate, use two sets of the washer and screw combinations to attach it to the rack as shown in the following figure.

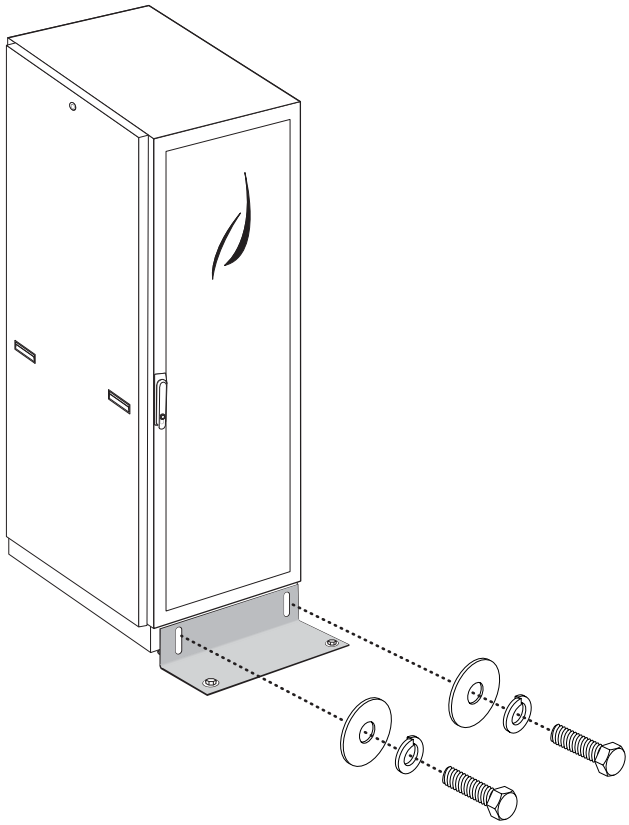

Figure 5-20. Proper anti-tip plate placement

5.7 Moving Rack to Permanent Location

After you have completed the replacement of the side panels and the attachment of the anti-tip plate onto the equipment rack, you are ready to move the rack to its permanent location.

1. With at least two people steadying the rack, slowly wheel the rack to its permanent location.

2. After the rack is in its permanent location, lower the levelers to the point that the casters are no longer touching the floor.

3. Check to make sure the rack is level on all sides and make adjustments to the levelers if necessary.

6.0 Installing the UPS

This chapter provides product safety notices and guidelines for installing the 120-volt UPS or the 208-volt UPS into a Spinnaker rack or another square hole rack or a threaded rack. If you are not using a Spinnaker rack, review the instructions and safety warnings provided by your rack's manufacturer.

Warning: The 120-volt UPS chassis requires at least two people to lift and handle the chassis. When lifting the chassis, handle it in such a way that the weight is evenly distributed and stabilized. Follow national or regional safety standards when lifting or repositioning any SpinServer system components.

Warnung: Zum Anheben und Handhaben des 120-volt USV-Chassis sind mindestens zwei Personen erforderlich. Das Gewicht des Chassis sollte beim Anheben gleichmäßig verteilt und stabilisiert werden. Beim Anheben oder Neupositionieren aller SpinServer-Systemkomponenten sind die anwendbaren Sicherheitsstandards zu beachten.

Warning: The 208-volt UPS chassis requires mechanical assistance to lift and handle the chassis. When lifting the chassis with mechanical assistance, handle it in such a way that the weight is evenly distributed and stabilized. Follow national or regional safety standards when lifting or repositioning any SpinServer system components.

Warnung: Das 208 volt USV-Chassis muss mit mechanischen Hilfsmitteln angehoben und gehandhabt werden. Das Gewicht des Chassis sollte beim Anheben mit mechanischer Unterstützung gleichmäßig verteilt und stabilisiert werden. Beim Anheben oder Neupositionieren aller SpinServer-Systemkomponenten sind die anwendbaren Sicherheitsstandards zu beachten.

6.1 Installing the UPS in the Rack

If you ordered a Spinnaker rack or if you are supplying your own rack, installing the UPS includes the following tasks:

1. Reviewing the rack layout design and locating the marks on the rack for positioning the UPS slides

2. Installing the UPS chassis in the rack

Reviewing Rack Layout Design

Before starting to install the UPS chassis, review the rack layout design and locate the marks on the vertical rack rails to correctly position the UPS chassis slides in the rack.

Note: The UPS slides are not equal in height to the chassis itself. The slide requires less than 2U of vertical space for the 120-volt UPS and less than 3U of vertical space for the 208-volt UPS in the equipment rack; however, your rack layout design must allow a full 2 U of rack space for the 120-volt UPS and a full 3U of vertical space for the 208-volt UPS.

Note: Your rack layout design needs to reflect the fact that only the SpinServer is powered by the UPS.

UPS Installation in the Rack

To complete the installation of the UPS in the equipment rack, refer to the *APC Smart-UPS User's Manual*, which is included in the box with the UPS.

7.0 Installing the SpinServer

This chapter provides product safety notices, instructions, and guidelines for installing the SpinServer into a Spinnaker rack or another square-hole rack or a threaded rack. If you are not using a Spinnaker rack, review the instructions and safety warnings provided by your rack's manufacturer.

Warning: CLASS 1 LASER PRODUCT

Warnung: LASER KLASSE 1 PRODUKT

Warning: Lasers emit invisible radiation from the aperture opening when no fiber-optic cable is connected. When removing cables, do not stare into the open apertures. In addition, install protective aperture covers to fiber ports with no cable connected.

Warnung: Laser strahlen unsichtbare Strahlung von der Blendonöffnung Öffnung aus, wenn kein Glasfaserkabel angeschlossen wird. Wenn Sie Kabel löschen, starren Sie nicht in die geöffneten Blendenöffnungen an. Zusätzlich installieren Sie schützende Blendenöffnung Abdeckungen zu den Faserkanälen ohne das angeschlossene Kabel.

Warning: The SpinServer chassis requires at least two people to lift and handle the chassis. When lifting the chassis, handle it in such a way that the weight is evenly distributed and stabilized. Follow national or regional safety standards when lifting or repositioning any SpinServer system components.

Warnung: Zum Anheben und Handhaben des SpinServer Chassis sind mindestens zwei Personen erforderlich. Das Gewicht des Chassis sollte beim Anheben gleichmäßig verteilt und stabilisiert werden. Beim Anheben oder Neupositionieren aller SpinServer-Systemkomponenten sind die anwendbaren Sicherheitsstandards zu beachten.

Warning: While working on the system, do not wear loose clothing that can accidentally become entangled with one of the fans or touch an electrical circuit.

Warnung: Während am System gearbeitet wird, sollte keine lose Kleidung getragen werden, die sich in einem der Ventilatoren verwickeln oder einen Stromkreis berühren könnte.

Warning: To prevent injury when performing maintenance on a powered-down SpinServer, disconnect the power cords from all AC inlets before opening the cover of a server chassis.

Warnung: Um Verletzungen bei Wartungsarbeiten an einem ausgeschalteten SpinServer zu vermeiden, die Netzkabel vor dem Öffnen der Server-Chassis-Abdeckung aus den Netzsteckdosen herausziehen.

Warning: During normal operations, the internal components of the SpinServer and SpinStor become hot. During service operations, avoid touching hot surfaces.

Warnung: Bei normalem Betrieb werden die internen SpinServer- und SpinStor-Komponenten heiß. Die heißen Oberflächen während der Reparaturarbeiten nicht berühren.

Warning: To prevent personal injury, always allow the fans to spin down before removing the fan assembly.

Warnung: Um Verletzungen zu vermeiden, sollte vor dem Entfernen der Ventilatorbaugruppe gewartet werden, bis die Ventilatoren zum Stillstand gekommen sind.

Important: On the server chassis, the removable power supplies have handles to help facilitate their removal. Never use these handles to lift or carry the chassis.

Important: When attaching cables to the SpinServer, you must provide a service loop of 3 feet (1 meter) to allow the SpinServer to be extended the full length of the installation slides for servicing components on the interior of the chassis.

The SpinServer installation kit is described in the following table.

Table 7-1. SpinServer Installation Kit

Description	Number of Parts
Fastenerless SpinServer installation kit for Spinnaker racks and other square-hole racks	2
Universal installation kit for other racks (threaded-hole racks)	2

Note: The installation procedures for the SpinServer differ from those of the SpinStor disk enclosures and the UPS.

7.1 Installing the SpinServer in the Rack

If you have ordered a Spinnaker rack or if you are supplying your own rack, the slide assemblies are included with your SpinServer. Installing your SpinServer includes the following tasks:

1. Reviewing your rack layout design
2. Checking the parts in the SpinServer installation kits
3. Installing the SpinServer in a square hole rack using the fastenerless slide or in a threaded hole rack using the universal slides

Reviewing the Rack Layout Design

Before starting the chassis installation process, review your rack layout design. Use the rack-mounting template for the SpinServer to mark the locations on the vertical rack rails to position the slide assemblies in the rack.

Note: The SpinServer slides are not equal in height to the SpinServer itself. The slide requires less than 2U of vertical space in the equipment rack; however, your rack layout design must allow a full 4U of rack space for the SpinServer, as indicated by the template.

SpinServer Installation Kit

The SpinServer installation kit includes the following parts. Check to ensure that all the necessary parts are present.

- Fastenerless slide assembly
- Universal slide assembly
- Mounting hardware kit

Fastenerless Slide Assembly

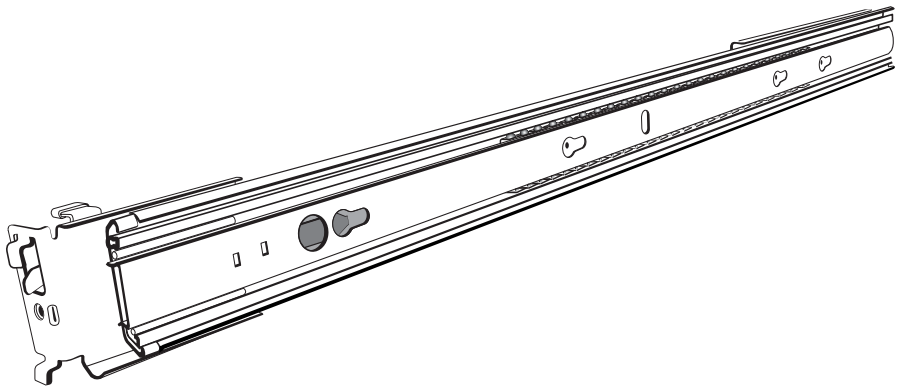

Figure 7-1. Fastenerless slide assembly.

Universal Slide Assembly

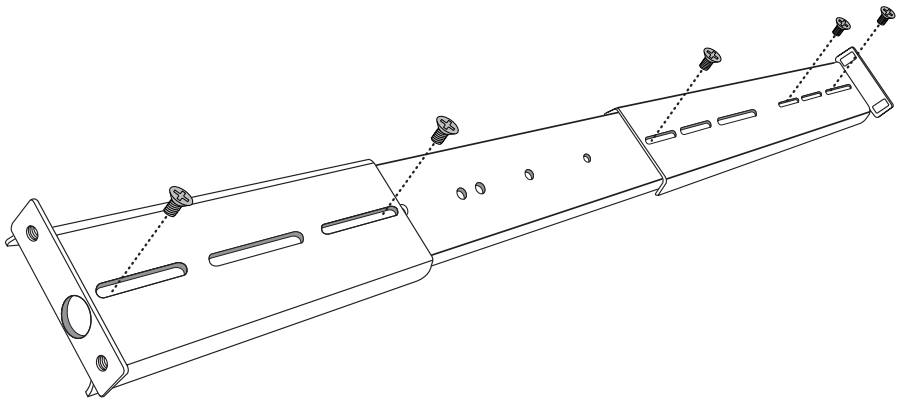

Figure 7-2. Universal slide assembly

Mounting Kit

The SpinServer hardware mounting kit include the following parts. Check to ensure that all the necessary parts are in the kit.

Table 7-1. SpinServer Mounting Hardware Kit

Mounting Hardware Kit Parts		
Description	**Number of Parts**	**Illustration**
#10-32 Truss head screw	7 (4 required for fastenerless slides) (6 required for universal slides)	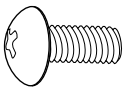
M5-0.8X12 Pan head screw (Universal slides only)	5 (4 required)	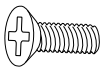
M4-0.7X6 Flat head screw (Universal slides only)	12 (10 required)	
M4-0.7X8 Pan head screw (Universal slides only)	12 (10 required)	
#10 Flat washer (Universal slides only)	5 (4 required)	

M6 Cage nut	3 (2 required)	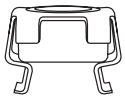

SpinServer Installation in a Square Hole Rack Using Fastenerless Slide

Follow these steps for mounting the fastenerless slide assemblies at the correct position in a Spinnaker rack or other square-hole rack.

1. Locate the marks you made on the equipment rack rails for the SpinServer. With the blue safety latches facing up and the inner section of the slide to be pulled out facing toward the front of the rack, insert the hooking tabs into the appropriate holes at the front of the rack and press down to lock the slide assembly in place.

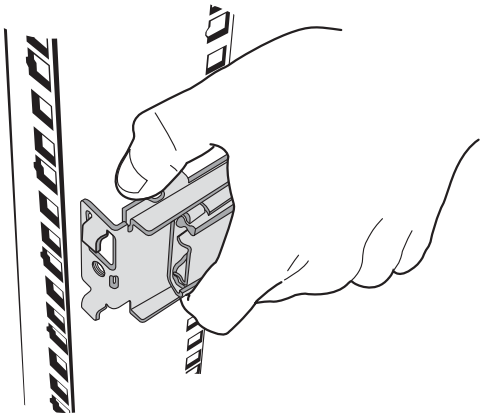

Figure 7-3. Insert the hooking tabs into the rack holes.

2. Insert the hooking tabs at the back of the rack and press down into place.

3. Pull the blue safety latch forward to ensure that the lines align on each slide assembly.

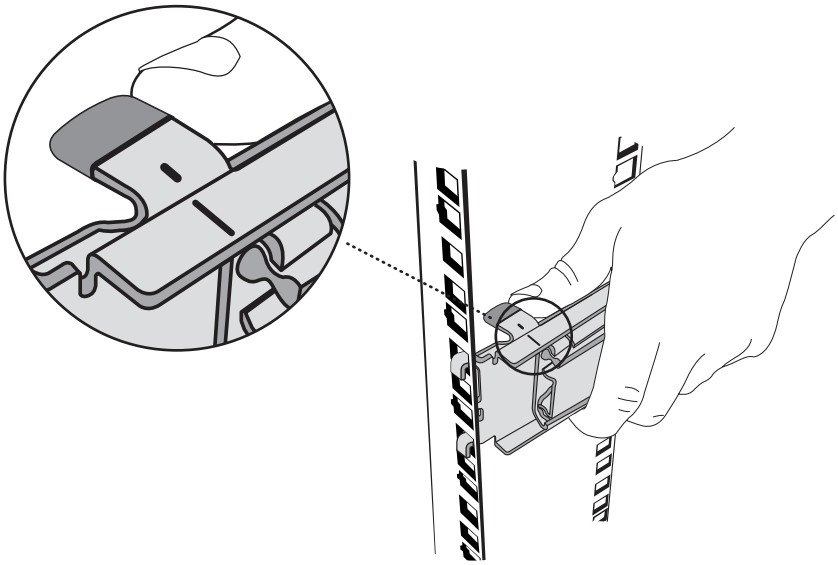

Figure 7-4. Align the lines on the blue safety latch and the slide assembly.

4. As shown in the following figure, install the M6 cage nuts in the location you have marked with tape or colored marker.

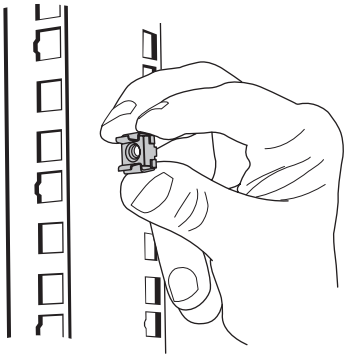

Figure 7-5. Cage nut installation

5. To secure the slide assemblies to the vertical rack rails, use the #10-32 truss head screws at the front and back of the rack.

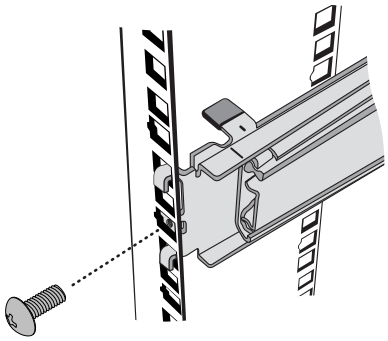

Figure 7-6. Secure the slide assembly to the rack with the #10-32 truss head screws.

6. Pull out the inner sliding sections of the mounted slides to the full extension positions, as shown here, until you hear a click as the slides are locked in place.

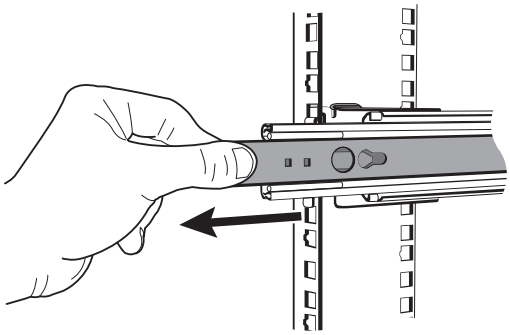

Figure 7-7. The extended inner slide

7. Depress the white tabs and completely remove the inner section from the slide assemblies.

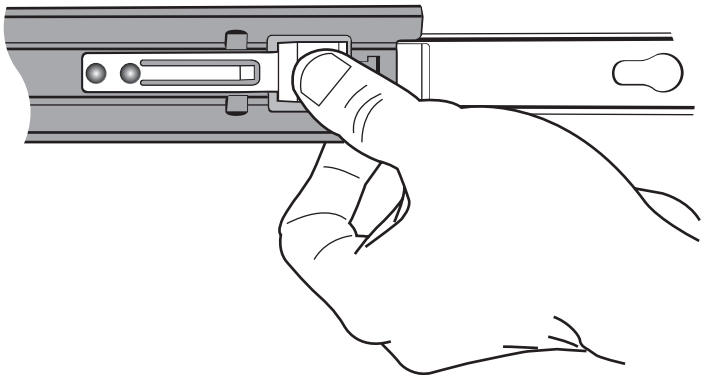

Figure 7-8. Depress the white tab.

8. Place the inner slide section over the shoulder screws on the SpinServer and push it toward the front of the SpinServer to lock in place.

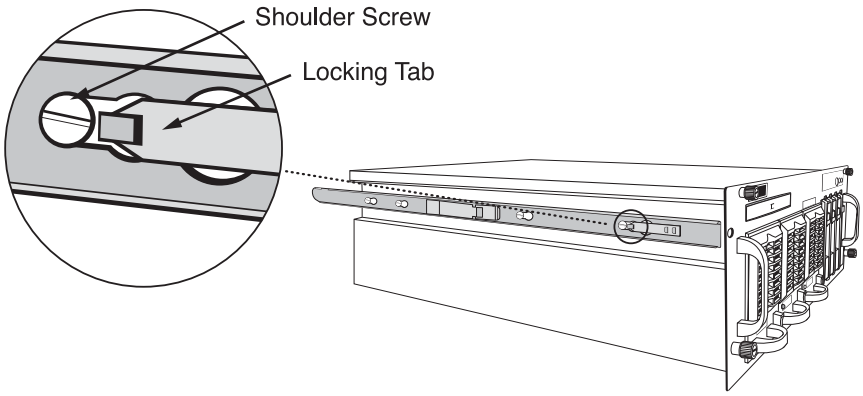

Figure 7-9. The inner slide is locked in place on the SpinServer with the locking tab.

9. With two people lifting the SpinServer, guide the inner slide into the slide assembly mounted in the rack until it stops.

Note: The first time the SpinServer is pushed in, it requires some additional pressure to seat the ball bearings.

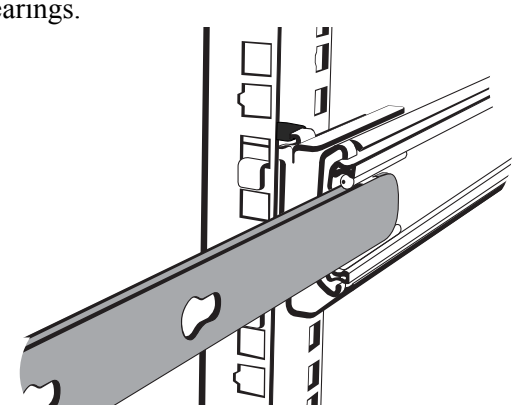

Figure 7-10. The inner slide is inserted into the slide assembly in the rack.

10. Depress the white tabs and with even pressure on both front corners of the SpinServer, push the SpinServer the remainder of the way into the rack.

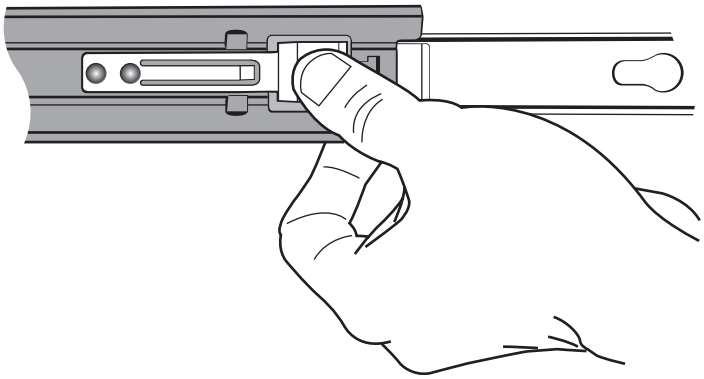

Figure 7-11. Depress the white tab.

11. Secure the SpinServer in the rack by tightening the rack lock thumb screws.

SpinServer Installation in a Threaded-Hole Rack Using Universal Slides

If you are installing the SpinServer system in a threaded-hole rack, you must use the universal slide installation kit.

Note: The supplied hardware supports only #10-32 threaded racks.

The universal slide installation kit for the SpinServer consists of three parts:

- **Front Bracket:** The front bracket is attached to the front vertical rail of the rack.
- **Rear Bracket:** The rear bracket is twice the length of the front bracket and is attached to the vertical rail at the back of the rack.
- **Slide Assembly:** The slide assembly is a three-piece, ball-bearing assembly.

The slide assembly is attached to the brackets before the universal slide assembly is installed as a unit into the rack. The front and rear brackets are left and right specific. The brackets are marked left and right. The left and right designations are as seen from the front of the rack.

Locate the marks you made on the equipment rack rails for the SpinServer.

Attaching the Front and Rear Brackets to the Slide Assembly

To attach the front and rear brackets to the slide assembly, follow these steps:

1. Attach the front and rear brackets to the slide assembly using M4-0.76 screws.

Note: The flange of the front bracket must be flush with the front edge of the slide assembly. Adjust the position of the rear bracket so that the slide is long enough to reach the outside of the rear vertical rack rail.

Note: The rubber bumper on the slide must be at the back of the rack.

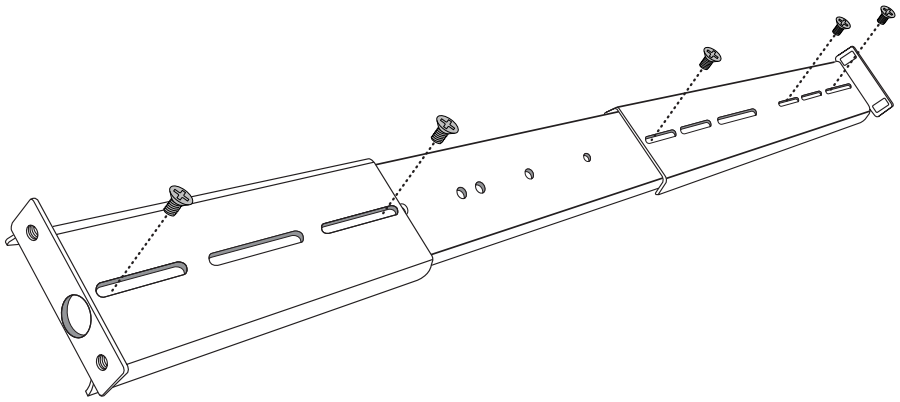

Figure 7-12. Universal slide assembly

2. The front bracket is attached to the vertical rack rail with the two M5 flat head screws.

Note: The front rack flange holes are sized for #10-32 screws. To accommodate the M5 flat head screws, drill out the #10-32 rack flange holes on the rack with a number 7 drill bit.

Important: Before drilling out the rack flange holes, ensure that the holes on the rack have been correctly marked by using the SpinServer template.

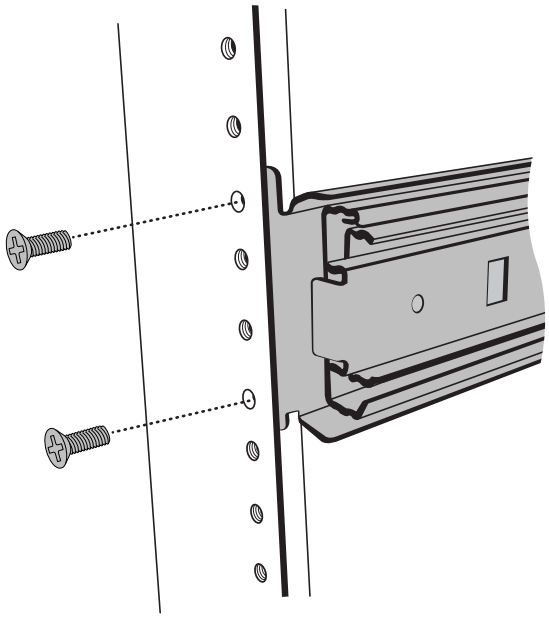

Figure 7-13. Fasten the slides to the front of the rack.

3. Attach the rear bracket outside the vertical rack rail, using two #10-32 truss head screws and two #10 washers.

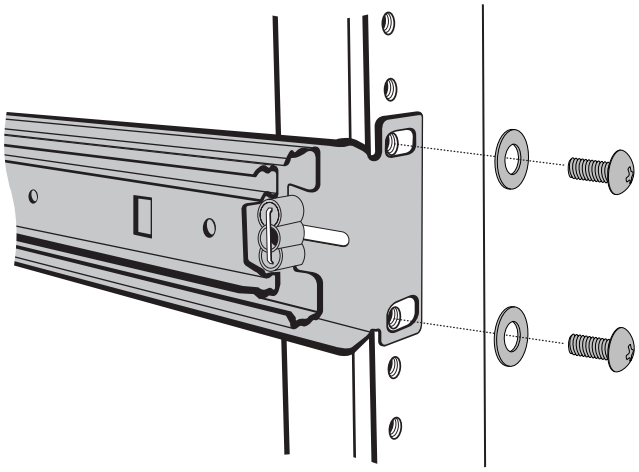

Figure 7-14. Fasten the slides to the back of the rack with the washers and the screws.

4. Pull the inner sliding rail out until it cannot be moved any farther.

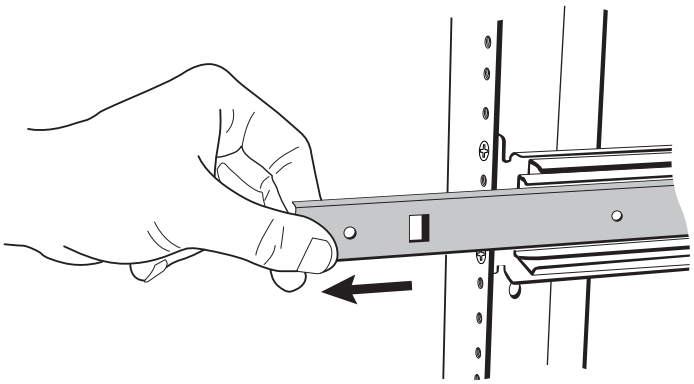

Figure 7-15. Pull the inner slide out to the fully extended position.

5. Use the inner locking tab to free the inner sliding rail from the slide assembly and pull the inner sliding rail completely out of the slide assembly. The remaining extended portion of the slide assembly must be pushed back into place.

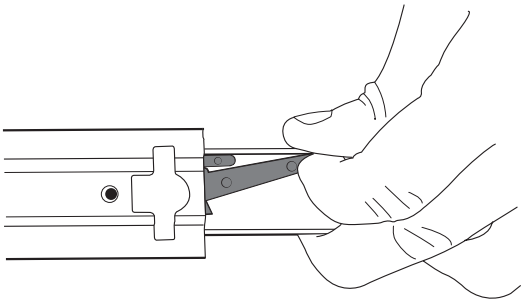

Figure 7-16. Use the inner locking tab to free the inner sliding rail.

6. The inner slide section is attached to the SpinServer using the M4-0.7X8 pan head screws, as shown in the following figure.

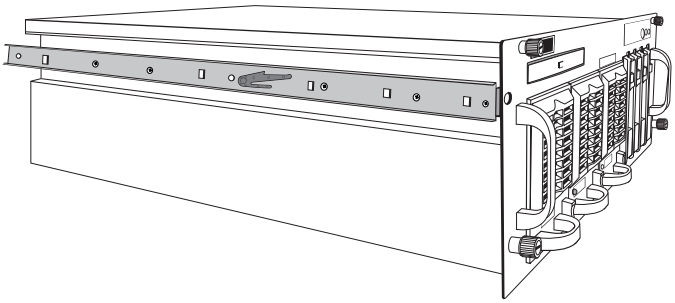

Figure 7-17. The inner slide is attached by using pan head screws.

7. With two people lifting the SpinServer, guide the inner slide into the slide assembly mounted in the rack and push the SpinServer into the proper position.

Note: The first time the SpinServer is pushed in, it requires some additional pressure to seat the ball bearings.

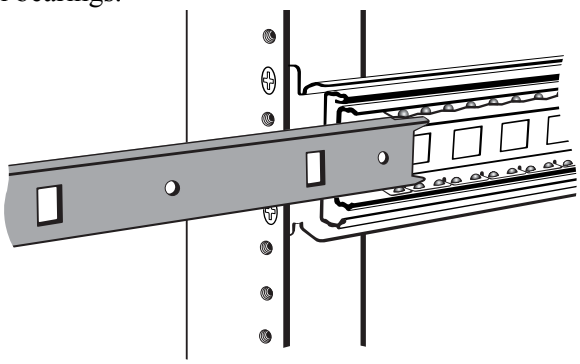

Figure 7-18. The inner slide is inserted into the slide assembly in the rack.

8. Secure the SpinServer in the rack by tightening the rack lock thumb screws to the front vertical rack rails.

8.0 Installing the SpinStor

This chapter provides product safety notices, instructions, and guidelines for installing the SpinStor into a Spinnaker rack or another square-hole rack or a threaded rack. If you are not using a Spinnaker rack, review the instructions and safety warnings provided by your rack's manufacturer.

Warning: CLASS 1 LASER PRODUCT

Warnung: LASER KLASSE 1 PRODUKT

Warning: Lasers emit invisible radiation from the aperture opening when no fiber-optic cable is connected. When removing cables, do not stare into the open apertures. In addition, install protective aperture covers to fiber ports with no cable connected.

Warnung: Laser strahlen unsichtbare Strahlung von der Blendonöffnung Öffnung aus, wenn kein Glasfaserkabel angeschlossen wird. Wenn Sie Kabel löschen, starren Sie nicht in die geöffneten Blendenöffnungen an. Zusätzlich installieren Sie schützende Blendenöffnung Abdeckungen zu den Faserkanälen ohne das angeschlossene Kabel.

Warning: The RAID and JBOD disk enclosures, without the disk carriers, require at least two people to lift and handle the chassis. When lifting the chassis, handle it in such a way that the weight is evenly distributed and stabilized. Follow national or regional safety standards when lifting or repositioning any SpinServer system components.

Warnung: Zum Anheben und Handhaben des Laufwerkchassis (RAID und JBOD) ohne die Kanister sind mindestens zwei Personen erforderlich. Das Gewicht des Chassis sollte beim Anheben gleichmäßig verteilt und stabilisiert werden. Beim Anheben oder Neupositionieren aller SpinServer-Systemkomponenten sind die anwendbaren Sicherheitsnormen zu beachten.

Warning: To prevent injury when removing or installing the blowers, do not grab the bottom of the tray. The blower operates at high speeds and continues to spin for a short time after the power has been disconnected.

Warnung: Um Verletzungen beim Entfernen oder Installieren der Ventilatoren zu vermeiden, sollte keinesfalls die Unterseite des Bodens angefasst werden. Der Ventilator läuft mit hoher Geschwindigkeit und dreht sich noch für kurze Zeit, nachdem das Gerät ausgeschaltet wurde.

Warning: The power supply units for SpinStor products have detachable power cords. Disconnect the power cord at the power supply unit before removing the power supply unit from the enclosure. When installing a power supply unit, insert the power supply unit into the enclosure before connecting the power cord.

Warnung: Die Netzteile für SpinStor-Produkte sind mit abnehmbaren Stromkabeln ausgestattet. Das Stromkabel zuerst vom Netzteil herausziehen und dann das Netzteil aus dem Gehäuse entfernen. Beim Installieren eines Netzteils muss dieses zuerst in das Gehäuse eingesetzt und dann das Netzkabel angeschlossen werden.

Warning: During normal operations, the internal components of the SpinServer and SpinStor become hot. During service operations, avoid touching hot surfaces.

Warnung: Bei normalem Betrieb werden die internen SpinServer- und SpinStor-Komponenten heiß. Die heißen Oberflächen während der Reparaturarbeiten nicht berühren.

Warning: To prevent personal injury, always allow the blowers to spin down before removing the blower assembly.

Warnung: Um Verletzungen zu vermeiden, sollte vor dem Entfernen der Gebläsebaugruppe gewartet werden, bis das Gebläse zum Stillstand gekommen ist.

Important: On the disk enclosure, the removable power supplies have handles to help facilitate their removal. Never use these handles to lift or carry the enclosure.

Caution: Ensure that the front, back, and sides of the disk enclosure are not blocked after installation of the enclosure into a cabinet or closed environment. Blocking the front, back, or sides of the enclosure can cause reduced airflow that compromises effective heat removal.

Note: The SpinStor enclosure must be installed in the rack without the disk drives in the enclosure.

8.1 Installing the SpinStor in the Rack

If you ordered a Spinnaker rack or if you are supplying your own rack, the shelf and extension bracket assemblies are included with your SpinStor RAID or JBOD.

Installing your disk enclosure includes the following tasks:

1. Reviewing your rack layout design.
2. Checking the parts in the disk enclosure shelf assemblies.
3. Mounting the SpinStor enclosure in a threaded-hole rack or mounting the SpinStor enclosure in a square-hole rack.

Reviewing the Rack Layout Design

Before starting the enclosure shelf assembly process, review your rack layout design. Use the rack-mounting template for the SpinStor to mark the locations on the vertical rack rails to position the shelf assemblies in the rack.

Caution: When you install the disk enclosure into a cabinet or closed environment, the operating ambient temperature of the rack environment can be higher than the maximum recommended ambient temperature. You must provide for the proper circulation of air to avoid exceeding the maximum recommended ambient temperature.

Note: The disk enclosure shelves are not equal in height to the disk enclosure itself. The shelf requires less than 3U of vertical space in the equipment rack; however, your rack layout design must allow a full 3U of rack space for the disk enclosure, as indicated by the template.

Note: The rack shelf assembly and the installation procedures for the SpinStor differ from the procedures for the SpinServer and the UPS.

SpinStor Installation Kit

The SpinStor installation kit includes the following parts. Check to ensure that all the necessary parts are present.

- Shelf and bracket assemblies
- Mounting hardware kit

The SpinStor mounting hardware kit include the following parts. Check to ensure that all the necessary parts are in the kit

Table 8-1. SpinStor Mounting Hardware Kit.

Mounting Hardware Kit Parts		
Description	**Number of Parts**	**Illustration**
#10-32, 100° Flat head screw	12 (10 required)	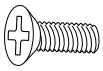
#8-32 Truss head screw	5 (4 required)	
#8-32 Lock nut	5 (4 required)	
Shelf	2	
Extension bracket	2	
Front mounting plates, square-hole rack	2	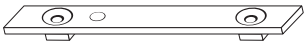
Rear mounting plates, square-hole rack	2	
Front mounting plates, threaded rack	2	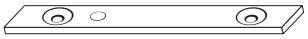
Rear mounting plates, threaded rack	2	

SpinStor Installation in a Square-Hole Rack

To install the shelf and extension bracket assemblies in a square-hole rack, follow the steps below. The completed assemblies are shown in the following illustration.

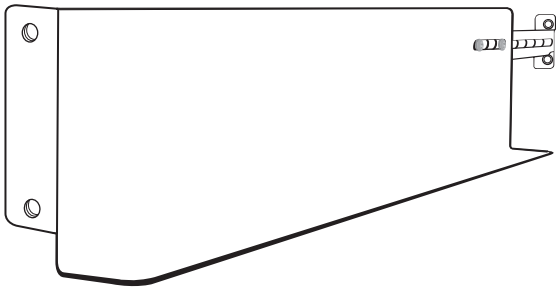

Figure 8-1. The assembled shelf and bracket

Note: If you are not using a Spinnaker rack, your assembly procedure can differ from the one described here. When using another manufacturer's rack, review the instructions and safety warnings provided by your manufacturer.

1. Attach the extension bracket to the shelf, as shown in the following illustration. The #8-32 truss head screws are placed on the inside of the shelf/bracket unit, and the #8-32 nuts are on the outer side. Do not tighten the screws at this point in the installation procedure.

2. Adjust the position of the extension bracket to match the correct length for the depth of the rack that is being used, and tighten the screws that attach the bracket to the shelf.

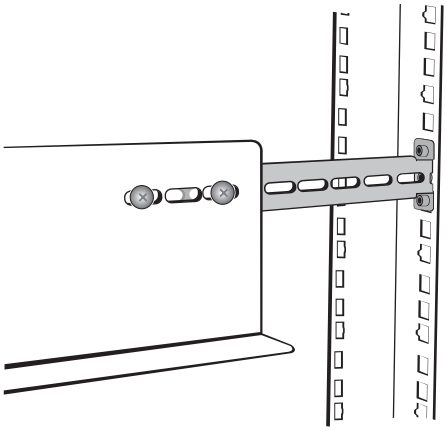

Figure 8-2. Adjust the extension brackets to match the correct length for the depth of the rack.

3. In the correct position in the rack, attach the shelf flange to the front vertical rail in the rack by using the #10-32 flat head screws and front mounting plates.

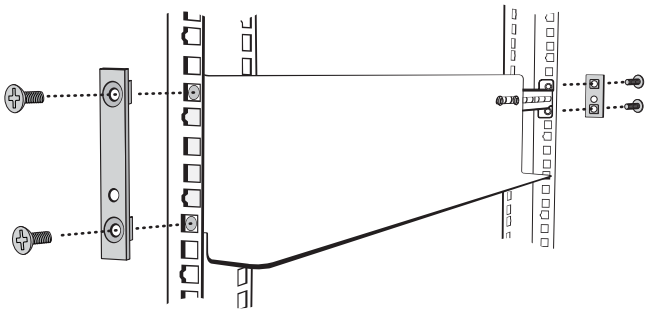

Figure 8-3. Attach the mounting plates and shelf to the vertical rack rails.

Note: There are different mounting plates for square-hole racks and threaded-hole racks. The mounting plates for square hole racks have square protrusions on the back to help you properly align the shelf.

4. Secure the extension brackets to the rear vertical rack rail by using the rear mounting plates and the #10-32 flat head screws.

5. With the shelf/extension bracket assemblies attached to the rack, you are ready to install the SpinStor in the rack by lining up the rear of the enclosure with the front of the enclosure shelf.

Note: In the Spinnaker rack, there is a 0.25 inch clearance on the width dimension for the disk enclosure. For smooth installation, careful guidance of the enclosure into the shelves is required. With two people working together, keep the pressure even on both sides and slowly slide the enclosure into the shelves until the front panel of the enclosure meets the upright rack side rails.

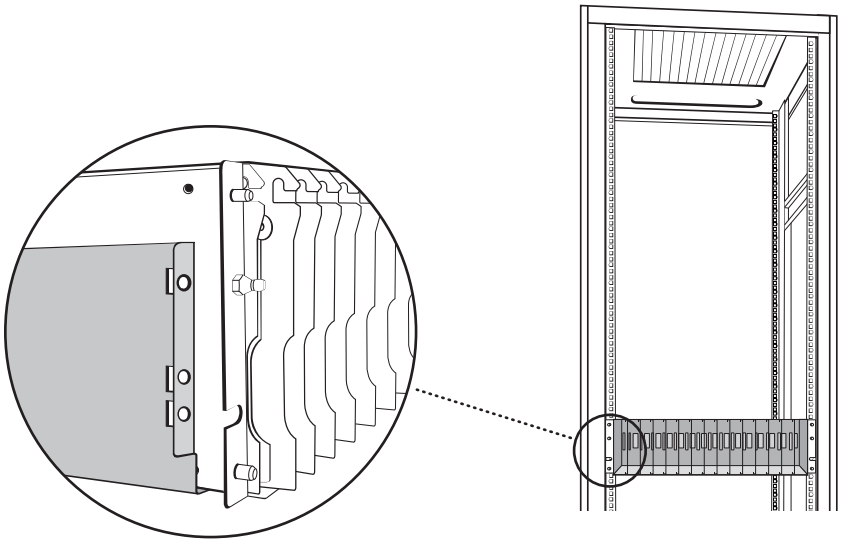

Figure 8-4. The tight fit of the disk enclosure in the rack requires you to smoothly push it into the rack.

6. Insert and tighten the #10-32 flat head screws to hold the front of the disk enclosure to the rack unit.

7. Snap the end caps onto the ball studs on each side of the unit to complete the installation.

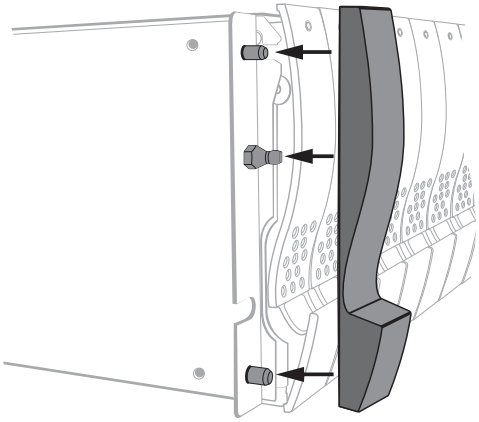

Figure 8-5. Place the end cap over the ball studs and press firmly in place.

SpinStor Installation in a Threaded-Hole Rack

To install the shelf and extension bracket assemblies in a threaded-hole rack, follow the steps below. The completed assemblies are shown in the following illustration.

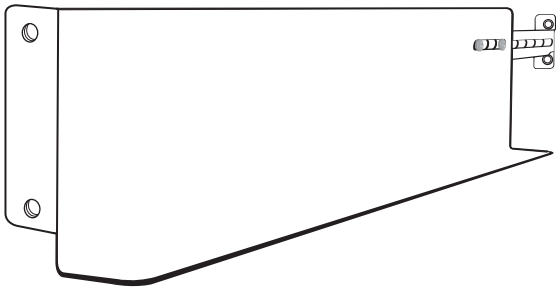

Figure 8-6. The assembled shelves and brackets

Note: If you are not using a Spinnaker rack, your assembly procedure can differ from the one described here. When using another manufacturer's rack, review the instructions and safety warnings provided by your manufacturer.

1. Attach the extension bracket to the shelf, as shown in the following illustration. The #8-32 truss head screws are placed on the inside of the shelf/bracket unit and the #8-32 nuts are on the outer side. Do not tighten the screws at this point in the installation procedure.

2. Adjust the position of the extension bracket to match the correct length for the depth of the rack that is being used, and tighten the screws that attach the bracket to the shelf.

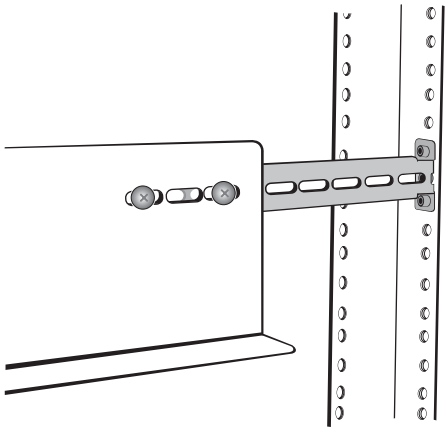

Figure 8-7. Adjust the extension brackets to match the correct length for the depth of the rack.

Note: Because the shelf and extension bracket are threaded, the holes must be redrilled to accommodate the #10-32 flat head screws.

3. Using a number 7 drill bit, drill out the two holes in the front mounting flange of the shelf and the two holes in the rear rack flange for the extension bracket.

Important: Before drilling out the flange and rack rail holes, ensure that the holes on the rack have been correctly marked, as indicated by the template.

---

4. In the correct position in the rack, attach the shelf flange to the front vertical rail in the rack by using the #10-32 flat head screws and front mounting plates.

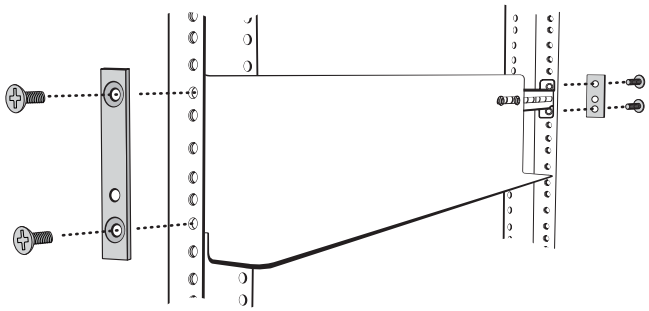

Figure 8-8. Attach the mounting plates and shelf to the vertical rack rails (front view).

Note: There are different mounting plates for square-hole racks and threaded-hole racks. The mounting plates for the threaded-hole racks do not have square protrusions on the back of the plate.

5. Secure the extension brackets to the rear vertical rack rail by using the rear mounting plates and the #10-32 flat head screws.

6. With the shelf/extension bracket assemblies attached to the rack, you are ready to install the SpinStor in the rack by lining up the rear of the enclosure with the front of the enclosure shelf.

Note: In the Spinnaker rack, there is a 0.25 inch clearance on the width dimension for the disk enclosure. For smooth installation, careful guidance of the enclosure into the shelves is required. With two people working together, keep the pressure even on both sides and slowly slide the enclosure into the shelves until the front panel of the enclosure meets the upright rack side rails.

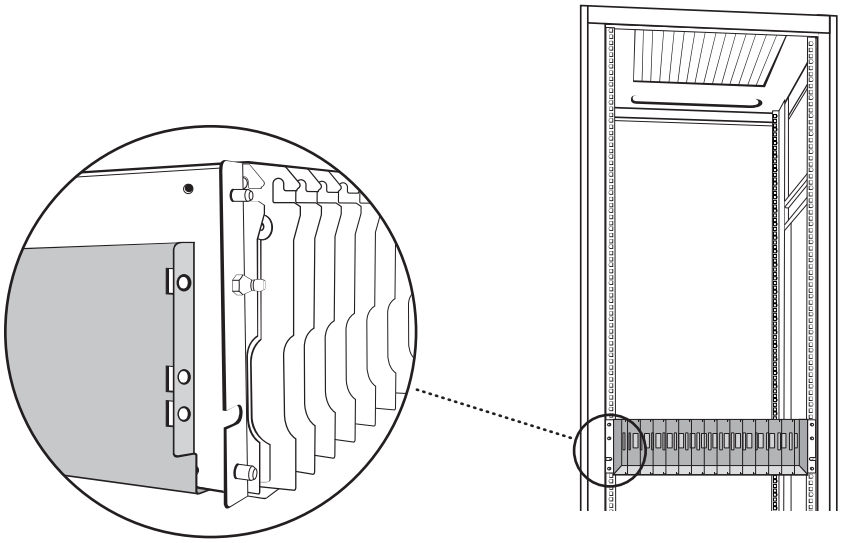

Figure 8-9. The tight fit of the disk enclosure in the rack requires you to smoothly push it into the rack.

7. After sliding the enclosure into the shelves, insert and tighten the #10-32 flat head screws to hold the front of the disk enclosure to the rack unit.

8. Snap the end caps onto the ball studs on each side of the unit to complete the installation.

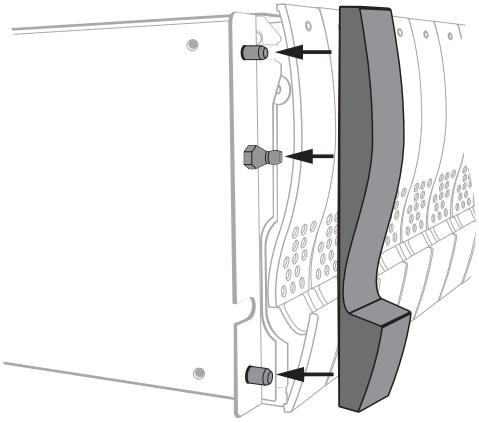

Figure 8-10. Place the end cap over the ball studs and press firmly in place.

Inserting the Disk Drive Carriers

After installing the disk enclosure in the rack, remove the disk drive carriers from the antistatic bags and insert them into the disk enclosure.

Caution: Do not unpack or install disk drives without using a properly grounded wrist or heel strap. Failure to do so can result in ESD damage that causes equipment failure.

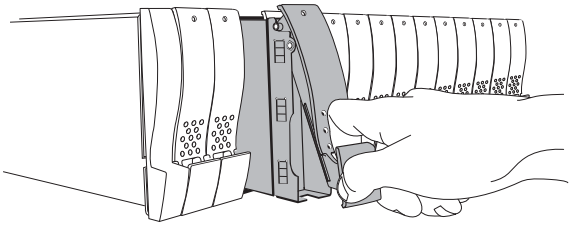

Figure 8-11. Insert the carriers into the disk enclosure.

Note: The disk carriers must be installed into the correct disk enclosure, either the RAID or the JBOD. The serial number of the correct disk enclosure is listed in the documentation that is included in the shipping container for the disk carriers. Locate the serial number for the disk enclosure before you begin to insert the disk carriers into the correct disk enclosure.

Caution: Operating the disk enclosure with one or more disks removed increases the operating temperature of the remaining disks. Although the increase is modest and does not cause imminent failure, avoid operating the disk enclosure with one or more disks removed.

9.0 Setting Disk IDs and Installing Cables

After you have completed installing the SpinStor enclosures into the equipment rack, you are ready to connect the various cables and install the power strips. It is best to set the disk drive IDs before installing the cables so that the cables do not interfere with reading and setting the rotary switches.

Your SpinServer system includes one or more SpinStor RAID enclosures attached to the SpinServer. For increased data storage, you can add SpinStor JBOD enclosures to the system by attaching them to the SpinStor RAID.

Important: When attaching cables to the SpinServer, you must provide a service loop of 3 feet (1 meter) to allow the SpinServer to be extended the full length of the installation slides for servicing components on the interior of the enclosure.

9.1 SpinServer Ports and Connectors

The SpinServer ports and connectors are detailed in the following illustration.

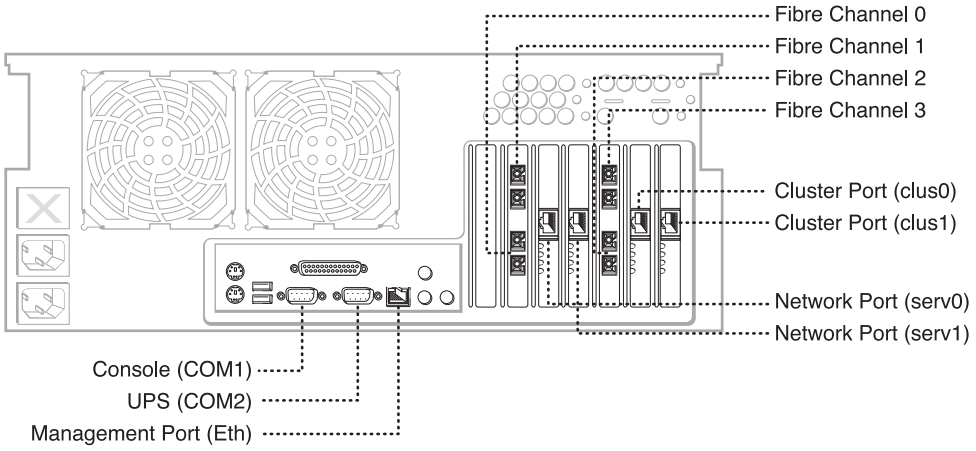

Figure 9-1. SpinServer ports and connectors.

9.2 SpinStor RAID LEDs and Connectors

The RAID enclosure's LEDs and connectors are detailed in the following illustration.

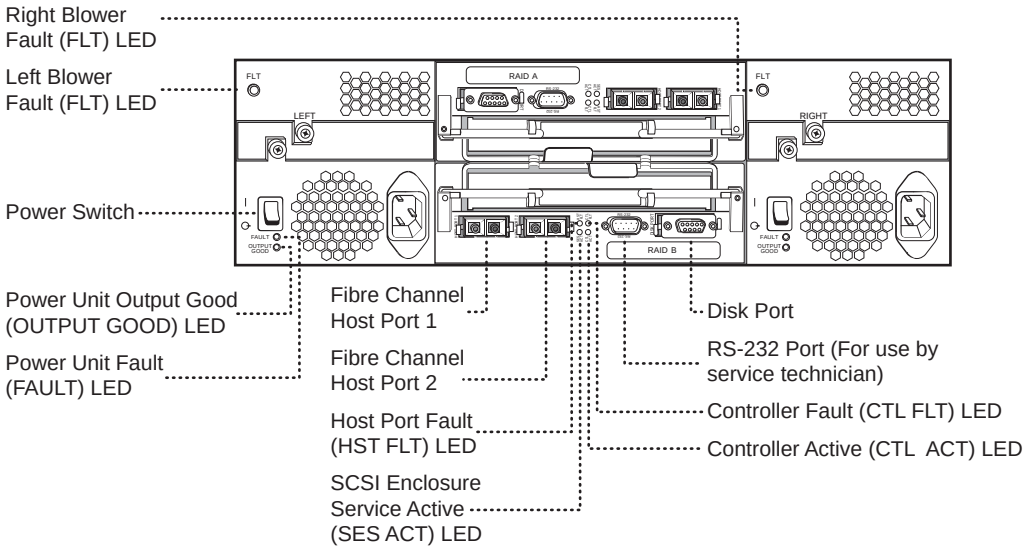

Figure 9-2. RAID LEDs and connectors.

9.3 SpinStor JBOD LEDs and Connectors

The JBOD enclosure's LEDs and connectors are detailed in the following illustration.

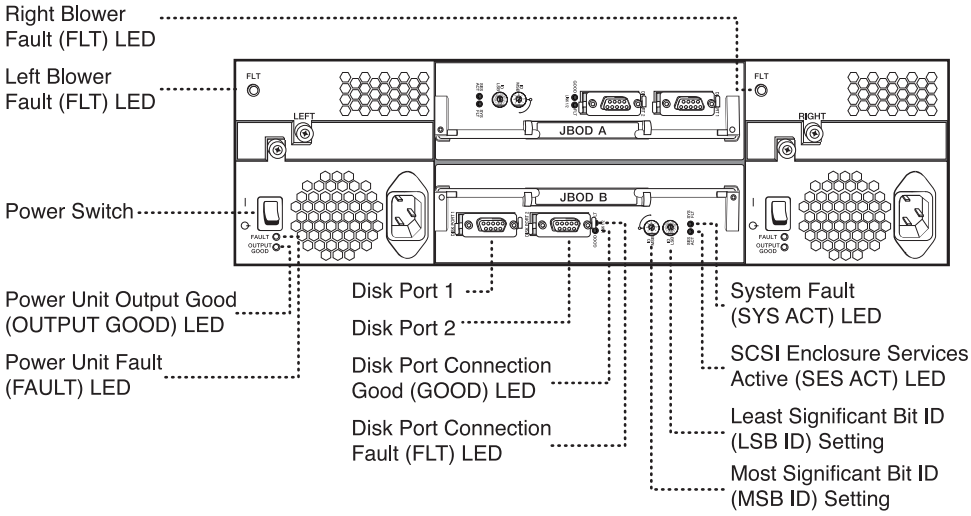

Figure 9-3. SpinStor JBOD LEDs and connectors.

9.4 Setting Disk IDs

All of the disks attached to a single RAID enclosure must have unique IDs. A disk's ID is determined by its physical location within the disk enclosure and the base ID setting of that enclosure.

Note: All disk drives must have unique IDs. Nonunique disk IDs within a system can cause loss of data.

SpinStor RAID

The base ID setting of a SpinStor RAID is preset to 00 and cannot be changed when you configure the disk enclosure.

SpinStor JBOD

The disk drive IDs in the SpinStor JBOD must be set manually by setting the base ID of that enclosure using the rotary address switches at the back of the enclosure. The rotary switches are labeled most significant bit (MSB) and least significant bit (LSB).

There are two sets of these switches on each expansion enclosure, one on the upper I/O module and one on the lower I/O module. Both sets of switches must be set identically for correct operation.

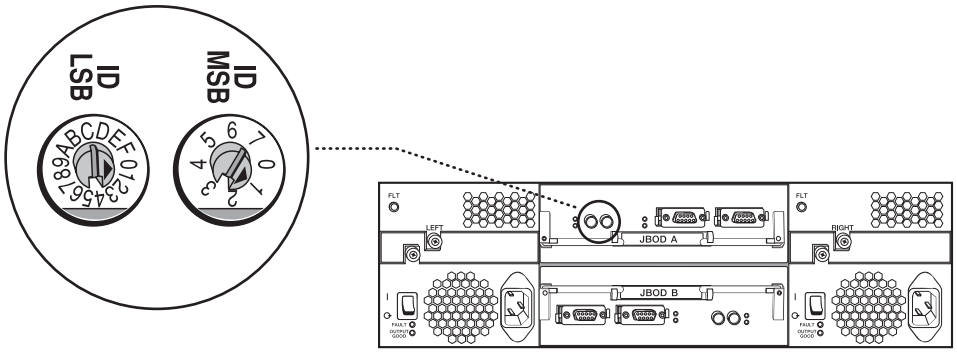

Figure 9-4. Illustration of MSB and LSB switches on the SpinStor JBOD

Note: The switches on the upper I/O module are in reverse position from those on the lower I/O module. Be sure that both sets of switches are always set to identical values.

Up to six expansion enclosures can be attached to a single RAID enclosure. For the expansion JBOD enclosures attached to a particular RAID disk enclosure, set the switches as follows:

Table 9-1. Settings for MSB and LSB Switches on the SpinStor JBOD

Disk Enclosure	MSB Switch	LSB Switch
RAID	0*	0*
Expansion 1	1	0
Expansion 2	2	0
Expansion 3	3	0
Expansion 4	4	0
Expansion 5	4	F
Expansion 6	6	0

*RAID disk enclosure switch settings are preset and cannot be changed.

9.5 Connecting UPS Management Cable

Connect the SpinServer COM2 port to the APC UPS computer interface port. See the *APC Smart-UPS User's Manual* to locate the proper connector on the UPS. Use the cable supplied with the UPS.

Important: Only the SpinServer is connected to the 208-volt UPS. Do not connect any other equipment to the UPS.

Caution: You must connect the SpinServer COM2 port to the same UPS that is connected to the SpinServer power cord. Failure to make these connections can result in the loss of data.

Caution: Do not use a standard serial interface cable when connecting the SpinServer to the UPS because it is incompatible with the pin functions on the UPS connector. Using a standard serial interface cable prevents proper communication between the SpinServer and UPS and can result in the loss of data.

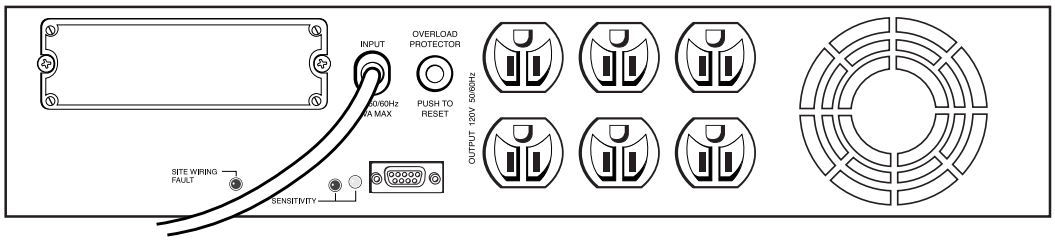

Figure 9-5. Rear view of the 120-volt UPS

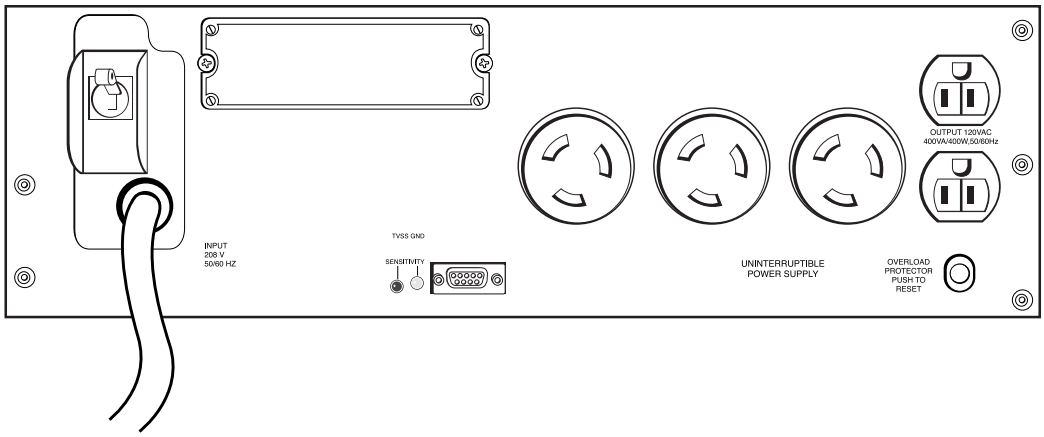

Figure 9-6. Rear view of the 208-volt UPS

9.6 Connecting Fibre Channel Cables

The most efficient way to share a single Fibre Channel connection among several disks or RAID controllers is to connect the devices in the form of a loop.

When one of the devices needs to send data to another device on the loop, it sends the data to its neighbor, which hands it off to its neighbor, and so on until the data reaches its destination. This process is extremely fast and efficient, enabling many disks to be connected to a single RAID controller or many RAID controllers to be connected to a single SpinServer port.

If the fiber-optic Fibre Channel cable between two RAID controllers is removed, the loop is broken and there is no longer a complete circuit from the SpinServer to the RAID controller and back again. This is a normal occurrence, however, and the Fibre Channel devices are designed to repair the loop in a fraction of a second.

At every Fibre Channel connection, an electronic bypass switch is present to complete the loop if signals are no longer being received due to a downstream failure.

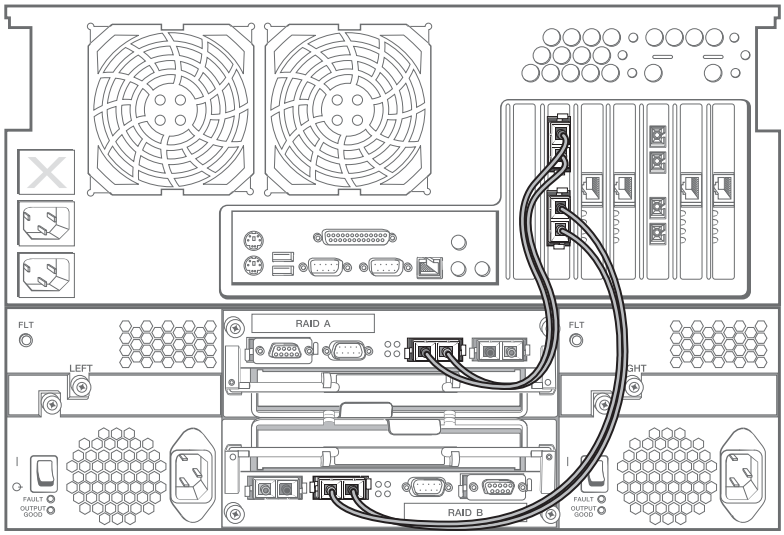

Figure 9-7. The Fibre Channel cable is attached to the SpinServer and to the RAID enclosure.

Dual Loops

For redundant configurations, dual loops are used to connect to different hosts, dual host adapters, and other devices.

All of the daisy-chained RAID controllers connected to a pair of SpinServer ports are connected using two Fibre Channel arbitrated loop (FC-AL) connections, one for each port of the pair. Similarly, all of the disks in a RAID system are connected with two Fibre Channel arbitrated loops, one connecting the upper I/O modules and one connecting the lower I/O modules.

Using dual loops improves the SpinServer performance by adding to the available data-carrying capacity of the system. Dual loops also improve reliability by allowing operations to continue if one loop has been damaged.

Optical Fiber Fibre Channel Cables

Note: For protection during shipment, your SpinServer has rubber plugs placed in the Fibre Channel ports. Remove these plugs before you connect the cables.

Optical fiber Fibre Channel cables are provided with each RAID enclosure and are compatible with the SpinServer Fibre Channel ports and with the fiber-optic GBICs installed in the RAID enclosure.

Using these cables, a RAID enclosure is attached either directly to the SpinServer or to another RAID enclosure, which itself is attached to the SpinServer, either directly or through another RAID enclosure.

Any number of RAID enclosures can be attached to a single SpinServer, but any given RAID enclosure can have only six JBOD enclosures attached to it.

Copper Fibre Channel Cables

Copper Fibre Channel cables are provided with each expansion JBOD enclosure and are compatible with the copper GBICs installed in both the RAID enclosure ports and the expansion JBOD enclosure ports. Using these cables, an expansion JBOD enclosure is attached either directly to a RAID enclosure or to another expansion JBOD enclosure, which itself is attached to a RAID enclosure either directly or through another expansion JBOD enclosure.

It is possible to attach as many as six expansion JBOD enclosures to a single RAID enclosure, allowing a single RAID set to include as many as 105 disks.

9.7 Connecting Ethernet Cables

Five Ethernet ports are available on your SpinServer. For optimal performance, gigabit Ethernet ports are provided for networking and clustering.

Management Interface

One of the Ethernet ports is the basic 10/100 megabit port, used for accessing the management interface software.

Network Ports

Two of the ports are network ports and are used to provide network services (for example, NFS or CIFS) to the client. To connect the network Ethernet cables, follow this illustration.

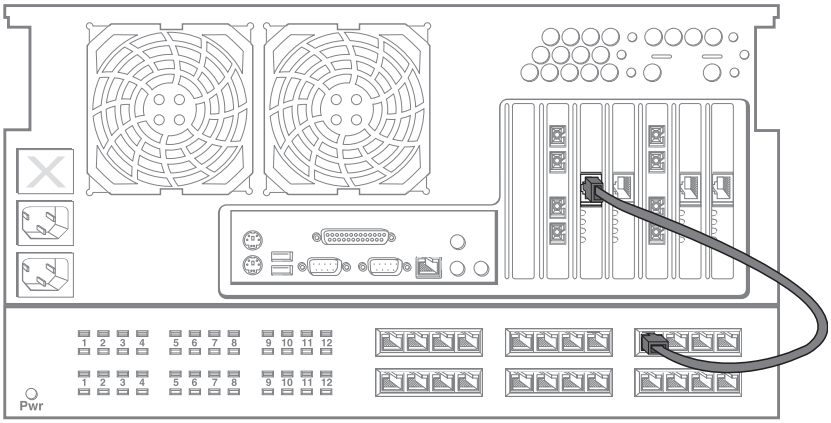

Figure 9-8. The Ethernet cable is attached to the enclosure and to the Ethernet switch.

Cluster Ports

To assure that all system components work together properly, the cluster ports must be configured even if only a single SpinServer is being installed. Even if you intend to use only one of the cluster ports, it is *highly recommended* that you configure both cluster ports at initial installation of the software.

Two of the Ethernet ports are used as cluster ports to interconnect two or more SpinServers for reliability and performance. For performance and security, the cluster ports are connected through dedicated gigabit Ethernet switches.

Connect the Ethernet cables from multiple SpinServers in a clustering configuration as shown in the following illustration.

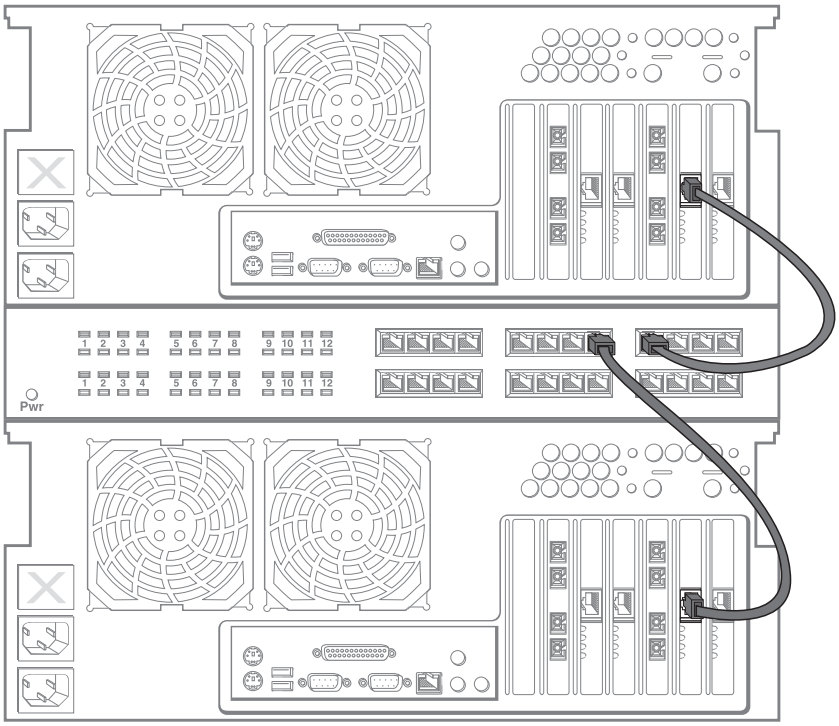

Figure 9-9. The Ethernet cable is attached to one SpinServer, to the Ethernet switch, and to the second SpinServer for clustering.

9.8 Connecting the SpinStor RAID to the SpinStor JBOD

Copper Fibre Channel cables are used to attach the disk ports on the SpinStor RAID enclosure to a disk ports to the SpinStor JBOD.

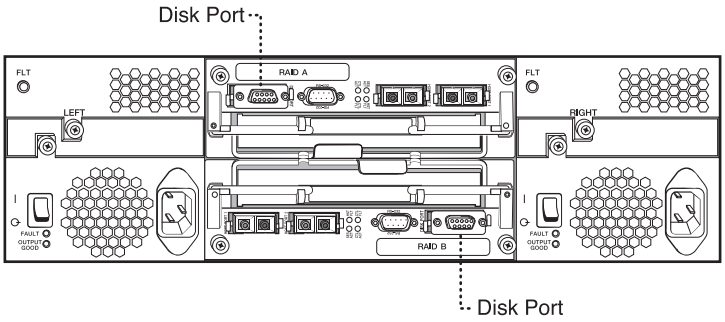

Figure 9-10. The SpinStor RAID disk ports.

The SpinStor JBOD has two disk ports. Either one can be used with the copper Fibre Channel cable to connect to the SpinStor RAID disk port.

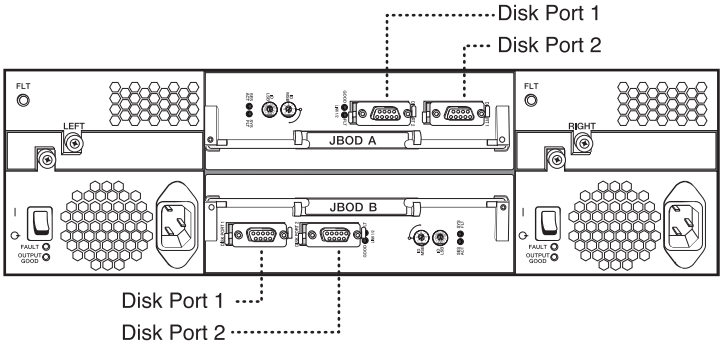

Figure 9-11. The SpinStor JBOD disk ports.

9.9 Connecting the Console

To access the command line interface (CLI) management software, connect a console with the null modem cable that is included in your SpinServer order. Connect the console to the serial port (COM1).

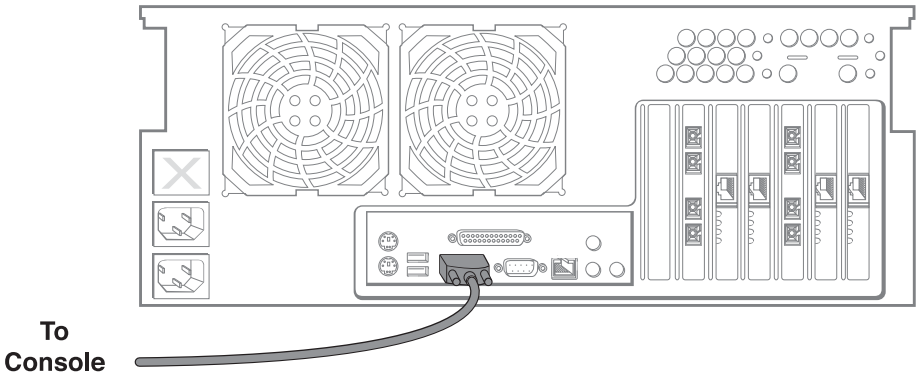

Figure 9-12. The serial cable is connected to the console.

Note: When using a direct connection through the serial port, you can access the management software only with the CLI.

9.10 SpinServer System Physical Connections

The illustration below demonstrates the many physical connections for a SpinServer system.

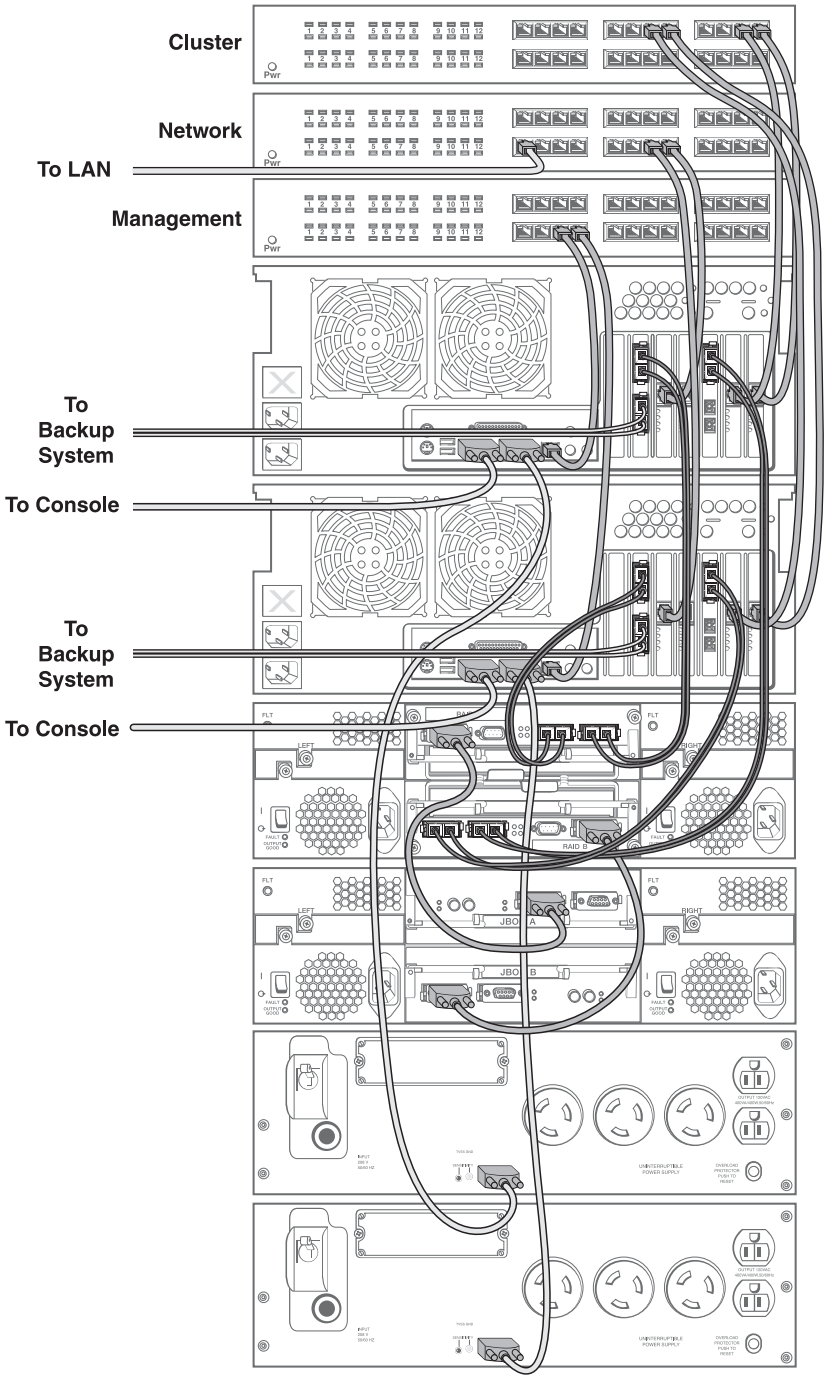

Figure 9-13. System cable connections for SpinServer components.

10.0 Clustering and HA Connections

This chapter provides information and illustrations for designing the physical layouts and cabling for the following system examples:

- A SpinServer system that includes one SpinServer, a SpinStor RAID, and a SpinStor JBOD.
- A simple cluster system that is built by adding two SpinServers for clustering.
- High-availability (HA) systems that demonstrate the redundancy of connections that are added to systems to provide resiliency and to ensure that the system has no single point of failure.

For more detailed information about clustering and HA and the command sets used to configure and manage clustering and HA, see the *Spinnaker Networks SpinServer 3300 Administration Guide* and the *Spinnaker Networks SpinServer 3300 Administration Reference*.

The SpinServer system physical configurations that are illustrated in this chapter are basic setups. For other clustered and HA physical connection options, contact the Spinnaker Technical Assistance Center.

Note: The SpinServer system components must be installed in the Spinnaker rack or a rack of your choice by following the rack layout design guidelines that are described in the chapter “Setting Up the Rack” on page 51.

10.1 Single Server System

The single server system includes one SpinServer, one SpinStor RAID, one SpinStor JBOD, and a UPS.

These components are installed in the equipment rack with the SpinServer at midlevel in the rack, the UPS at the bottom of the rack, and the SpinStor enclosures above or below the SpinServer.

Note: Even though this basic SpinServer system setup does not use clustering capability, each SpinServer must be entered into a cluster. In this configuration, use the **`spinservers createcluster`** command before any other system management task is undertaken. In this case, the cluster is a one-node cluster, consisting of a single SpinServer.

For additional information, see the “Configuring the SpinServer System” chapter on page 147.

Connections for the Single Server System

The physical connections for the components in the single server system are described is the previous chapter “Setting Disk IDs and Installing Cables” on page 97.

10.2 Clustered System

The clustered system setup used in the example includes two SpinServers, each with a SpinStor RAID and SpinStor JBOD connected to it. The clustered system includes a UPS for each SpinServer.

Clustering allows multiple SpinServers to be connected via a private cluster LAN or over a public WAN. Together these multiple systems act as a large virtual server or several large virtual servers. Any client connecting to any SpinServer network port in the cluster views the same set of exported files and file systems.

For security, the SpinServers in a cluster are typically connected through dedicated gigabit Ethernet switches. It is also recommended that you connect the members of the cluster through a virtual private network (VPN) to ensure that cluster traffic remains secure.

With a clustered system:

- The scalability of the SpinServer architecture is used to best advantage.
- Overall system capacity is enhanced with more storage and additional processing capacity.
- Data can be easily moved from one SpinServer to another.
- Data can be mirrored for HA.
- For configurations with two or more SpinServers, the client workload is shared among all SpinServers in the cluster.
- System management tasks for multiple SpinServers can be efficiently accomplished.

Note: The second SpinServer must be entered into the cluster by using the **`spinservers joincluster`** command.

For additional information, see the “Configuring the SpinServer System” chapter in this guide on page 147.

Connections for the Clustered System

The physical connections for the components in the clustered system are described in the chapter “Setting Disk IDs and Installing Cables” on page 97.

10.3 High Availability Systems

HA systems ensure failure resiliency by using the SpinHA software. The HA system designs used as examples in this section include the following combinations of SpinServer components:

- Two SpinServers and one SpinStor RAID
- Two SpinServers and two SpinStor RAIDs
- Two SpinServers, two SpinStor RAIDs, and two loop switches
- Two SpinServers, four SpinStor RAIDs, and two loop switches

In an HA configuration, one of the SpinServers is designated as the primary SpinServer for a given storage pool. The other SpinServer is designated as the secondary SpinServer.

The data is left on the secondary SpinServer until the primary SpinServer writes it to the disks. If the primary SpinServer fails to write the data, the secondary SpinServer accomplishes the task. The secondary SpinServer automatically and transparently takes over for the failed SpinServer and continues system operations without losing any committed data.

With an HA system:

- All the advantages of the clustered system are included.
- The system adds resiliency and removes any single point of failure.

Connections for the High Availability Systems

The physical connections for the components in the HA systems are the same as the physical connections for the clustered system, plus the HA connections that are described in the sections that follow.

High Availability with Two SpinServers and One SpinStor RAID

The most basic HA system is a two-SpinServer system with both SpinServers attached to one SpinStor RAID disk enclosure as shown in Figure 10-1. For the HA connections in this basic design, a port on each SpinServer is connected to a port on the SpinStor RAID.

The physical connections in this HA design ensure that each data update on the primary SpinServer is stored on the SpinStor RAID and becomes available to the secondary SpinServer. One SpinServer is designated as the primary server and the other is designated as the secondary server.

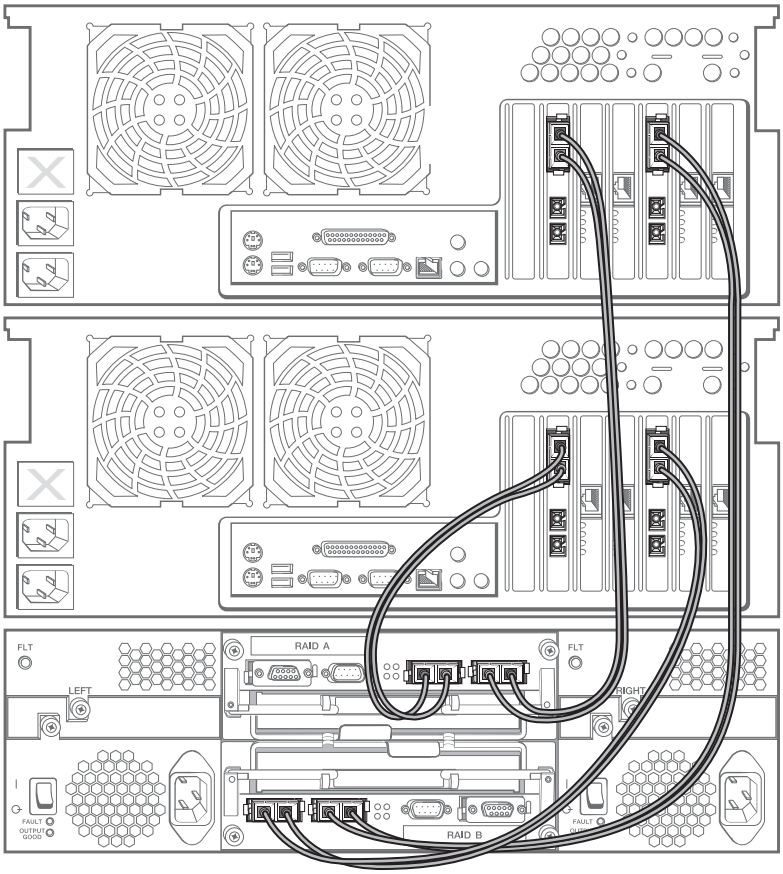

Figure 10-1. High availability with two SpinServers and one SpinStor RAID disk enclosure

High Availability with Two SpinServers and Two SpinStor RAIDs

In this second HA configuration example, each SpinServer is attached to both SpinStor RAID disk enclosures as shown in Figure 10-2. In this configuration, all four ports on both of the SpinStor RAIDs are used.

The physical connections in this HA design ensure that each data update on the primary SpinServer is stored on the SpinStor RAID and becomes available to the secondary SpinServer. The SpinServers can be designated as the secondary server for each other.

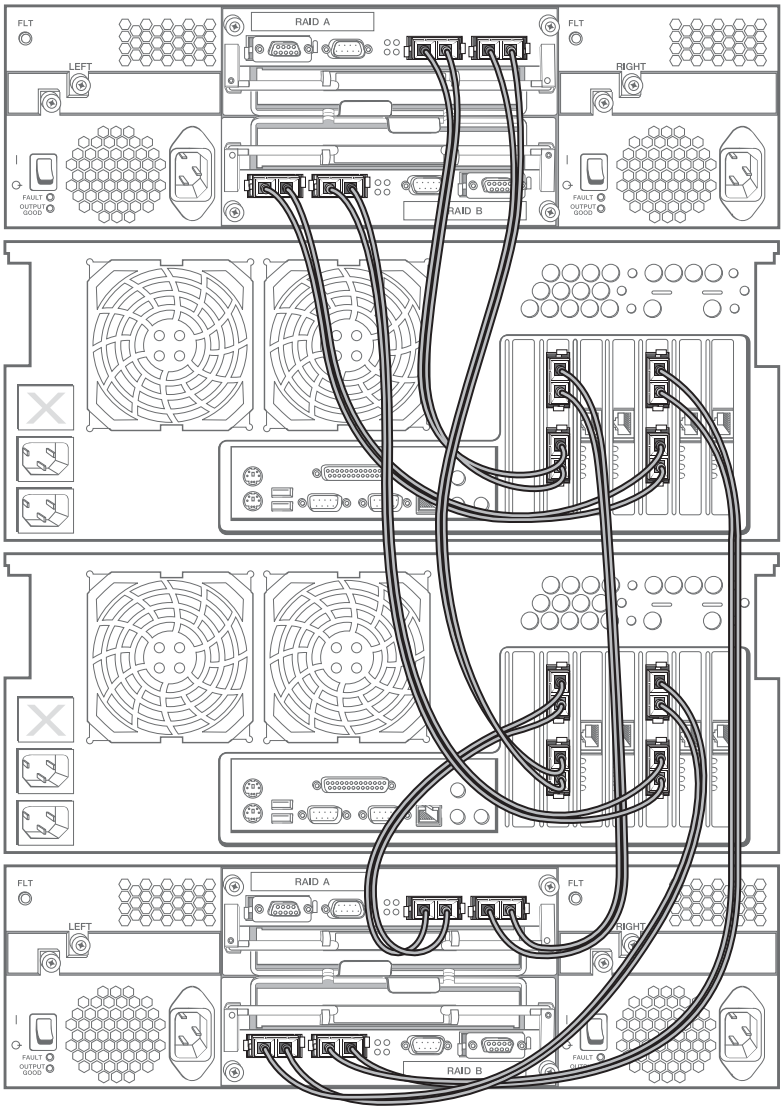

Figure 10-2. High availability with two SpinServers and two SpinStor RAID disk enclosures

High Availability with Two SpinServers, Two SpinStor RAIDs, and Switches

In this third HA configuration example, the two SpinServers and the two SpinStor RAIDs are connected to two loop switches.

This configuration meets all resiliency requirements for HA. By using the two loop switches, this configuration can lose any one Fibre Channel connection and continue to maintain robust system connectivity.

In this example, each SpinServer is attached to both loop switches and each SpinStor RAID enclosure is also attached to both loop switches. In this configuration, only two ports on both of the SpinStor RAIDs are used and only two ports on both of the SpinServers are used. There is SpinStor enclosure, RAID controller, disk, switch, and SpinServer redundancy and opportunity for easy and sufficient expandability with this configuration because SpinServers and SpinStors can be added as your system requires. The expandability is limited by the availability of loop switch connections.

High Availability with Two SpinServers, Four SpinStor RAIDs, and Two Switches

In this fourth HA configuration example, the two SpinServers and the four SpinStor RAIDs are connected to two zoned loop switches.

This configuration meets all resiliency requirements for HA. By using the two zoned loop switches, this configuration can lose any one Fibre Channel connection and continue to maintain robust and redundant system connectivity.

There is opportunity for easy and sufficient expandability with this configuration because as many SpinServers and SpinStors can be added as your system requires. The expandability is limited by the availability of loop switch connections.

11.0 Power Connections

This chapter describes the installation and configuration of the power distribution system within a Spinnaker rack.

Note: The examples and information provided in this chapter apply to a Spinnaker rack. If you using a different rack, contact the Spinnaker Technical Assistance Center for additional information about power configurations. See the chapter “Technical Assistance Center” on page 153 for information.

Note: The SpinServer system components must be installed in the Spinnaker rack by following the layout design guidelines that are described in the chapter “Setting Up the Rack” on page 51.

Power distribution units (PDUs) are the core components of the power distribution system within a Spinnaker rack. PDUs are small appliances that include AC power output receptacles, overload protection, and input power cords and plugs. There are four PDUs preinstalled in each Spinnaker rack.

11.1 Rack Power Specifications

Spinnaker racks can be ordered as a 120VAC rack or as a 208VAC rack. The rack voltage is determined by the type of PDU that is installed in the rack. The following table shows the specifications for the PDUs used in the 120VAC and 208VAC racks.

Table 11-1. PDU Specifications

Rack Voltage (VAC)	PDU Working Voltage Range (VAC)	PDU Maximum Current (AAC)	PDU Outlet Quan-tity	PDU Outlet Type	PDU Input Plug and Cord Type	PDU Overload Protection
120	100 - 125	16	10	NEMA 5-20R	NEMA L5-20P Perma-nent 12 ft. cord	20A Reset-table Thermal Circuit Breaker

Table 11-1. PDU Specifications

Rack Voltage (VAC)	PDU Working Voltage Range (VAC)	PDU Maximum Current (AAC)	PDU Outlet Quantity	PDU Outlet Type	PDU Input Plug and Cord Type	PDU Overload Protection
208	90 - 253	16 (125V US) 12.8 (250V US) 12 (125V Canada) 8 (250V Canada)	12	IEC 60320-C13	NEMA L6-20P Detachable 12 ft. cord[a]	20A Resettable Thermal Circuit Breaker

a. Detachable cord has IEC 60320-C19 female receptacle. PDU has IEC 60320-C20 male inlet.

11.2 Power Configuration Examples

Two power configuration examples are included in this chapter. There are other possible 120VAC and 208VAC configurations. Contact the Spinnaker Technical Assistance Center for additional information about configurations.

In the first example, a 120VAC SpinServer system with a single SpinServer is illustrated. In the second example, a more complex 208VAC SpinServer system with two SpinServers is illustrated.

The components for these two SpinServer systems are installed in a Spinnaker rack, which has four PDUs for power connections.

Power Configuration for a Single Server in a 120VAC System

In the following illustration, a typical power configuration for a 120VAC SpinServer system with a single SpinServer is shown.

The single SpinServer is connected to one SpinStor RAID enclosure, and the SpinStor RAID enclosure is connected to a SpinStor JBOD. For this 120VAC SpinServer rack setup, a 120-volt UPS is used.

The Spinnaker rack used for this illustration is a rack with four 120-volt PDUs installed.

As shown in the following illustration for this 120VAC SpinServer system, two of the 120-volt PDUs (PDU3 and PDU4) are not used. To provide power redundancy for the two PDUs that are used, the PDUs (PDU1 and PDU2) are each connected to a separate, dedicated branch circuit.

PDU Power Connections

To provide power redundancy, PDU1 is connected to one branch circuit (Circuit1) and PDU2 is connected to a different branch circuit (Circuit2).

JBOD Enclosure Power Connections

To provide power supply redundancy for the JBOD enclosure, the left power cord on the JBOD is connected to PDU1 and the right power cord is connected to PDU2.

RAID Enclosure Power Connections

To provide power supply redundancy for the RAID enclosure, the left power cord on the RAID enclosure is connected to PDU1 and the right power cord is connected to PDU2.

SpinServer Power Connections

To provide power supply redundancy for the SpinServer, power cord 1 on the SpinServer is connected to the 120-volt UPS and power cord 2 is connected to PDU2.

120-Volt UPS Connection

In this example, the power cord for the 120-volt UPS is connected to PDU1.

Important: Only the SpinServer is connected to the 120-volt UPS. Do not connect any other equipment to the UPS.

Caution: You must connect the SpinServer power cord to the same UPS that is connected to the SpinServer COM2 port. Failure to make these connections can result in the loss of data.

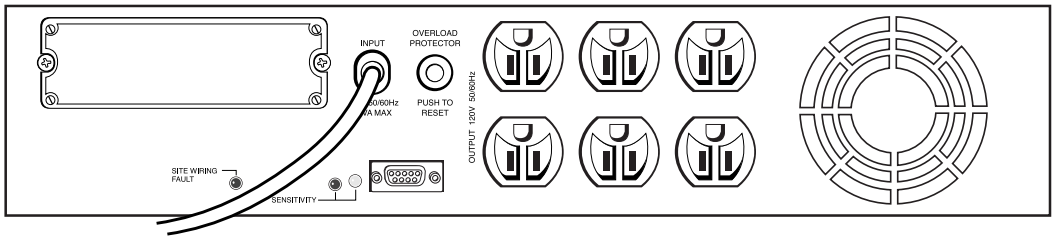

Figure 11-1. Rear view of the 120-volt UPS

Illustration for a Single Server in a 120VAC System

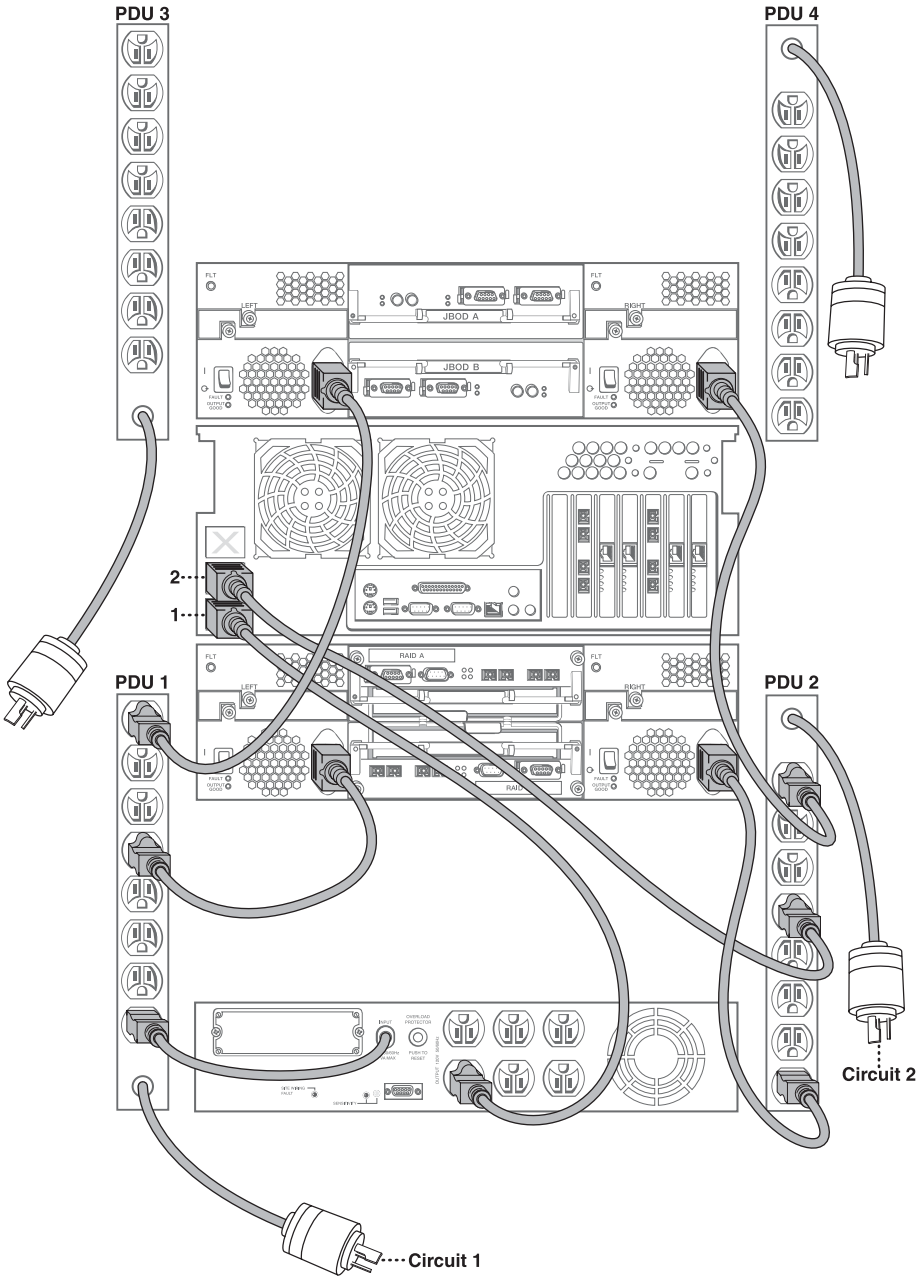

Figure 11-2. A power configuration with one of each of the following components: SpinServer, SpinStor RAID, SpinStor JBOD, and 120-volt UPS

Power Configuration for Dual Servers in a 208VAC System

In Figure 11-4, a typical power configuration for a 208VAC SpinServer system with two SpinServers is shown.

Each of the SpinServers is connected to one SpinStor RAID enclosure, and that SpinStor RAID enclosure is connected to a SpinStor JBOD. For this 208VAC SpinServer rack setup, two 208-volt UPSs are used.

The Spinnaker rack used for this illustration is a rack with four 208-volt PDUs installed.

As shown in the following illustration for the dual server SpinServer system, two of the 208-volt PDUs (PDU3 and PUD4) are not used. To provide power redundancy for the two PDUs that are used, the PDUs (PDU1 and PDU2) are each connected to a separate, dedicated branch circuit.

PDU Power Connections

To provide power redundancy, PDU1 is connected to one branch circuit (Circuit1) and PDU2 is connected to a different branch circuit (Circuit2).

JBOD Enclosure Power Connections

To provide power supply redundancy for each of the JBOD enclosures, the following connections are made:

- The left power cord on JBOD1 is connected to PDU1 and the right power cord is connected to PDU2.
- The left power cord on JBOD2 is connected to PDU1 and the right power cord is connected to PDU2.

RAID Enclosure Power Connections

To provide power supply redundancy for each of the RAID enclosures, the following connections are made:

- The left power cord on RAID1 is connected to PDU1 and the right power cord is connected to PDU2.
- The left power cord on RAID2 is connected to PDU1 and the right power cord is connected to PDU2.

SpinServer Power Connections

To provide power supply redundancy for the SpinServers, the following connections are made:

- Power cord 1 on SpinServer1 is connected to the 208-volt UPS1 and power cord 2 is connected to PDU1.
- Power cord 1 on SpinServer2 is connected to the 208-volt UPS2 and power cord 2 is connected to PDU2.

Important: Only the SpinServer is connected to the 208-volt UPS. Do not connect any other equipment to the UPS.

208-Volt UPS Connections

In this example, each 208-volt UPS is connected to a power outlet that is on a separate, dedicated branch circuit to provide power redundancy for the two 208-volt UPSs.

Note: To provide power supply redundancy for the SpinServer system, the 208-volt UPSs are connected to power outlets that are on separate, dedicated branch circuits that are different circuits than the circuits that are used for PDU1 and PDU2. UPS1 is connected to Circuit3 and UPS2 is connected to Circuit4.

Important: Only the SpinServer is connected to the 208-volt UPS. Do not connect any other equipment to the UPS.

Caution: You must connect the SpinServer power cord to the same UPS that is connected to the SpinServer COM2 port. Failure to make these connections can result in the loss of data.

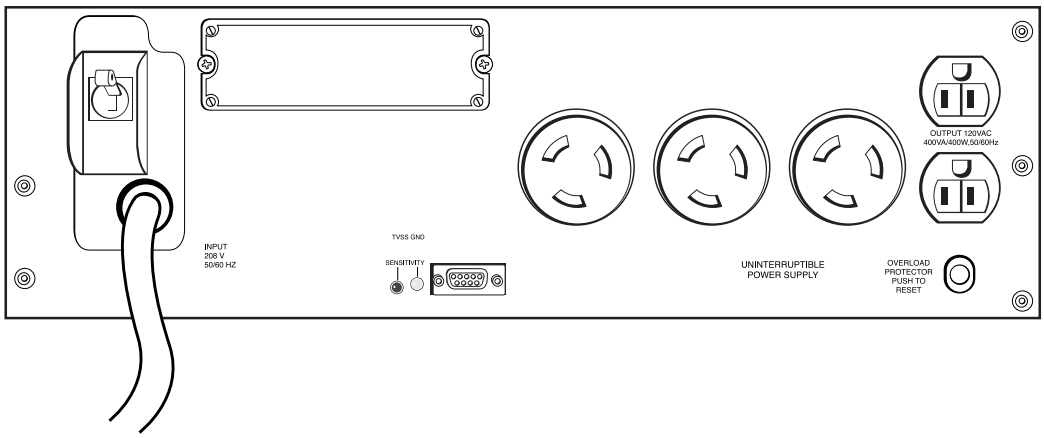

Figure 11-3. Rear view of the 208-volt UPS

Illustration for Dual Servers in a 208VAC System

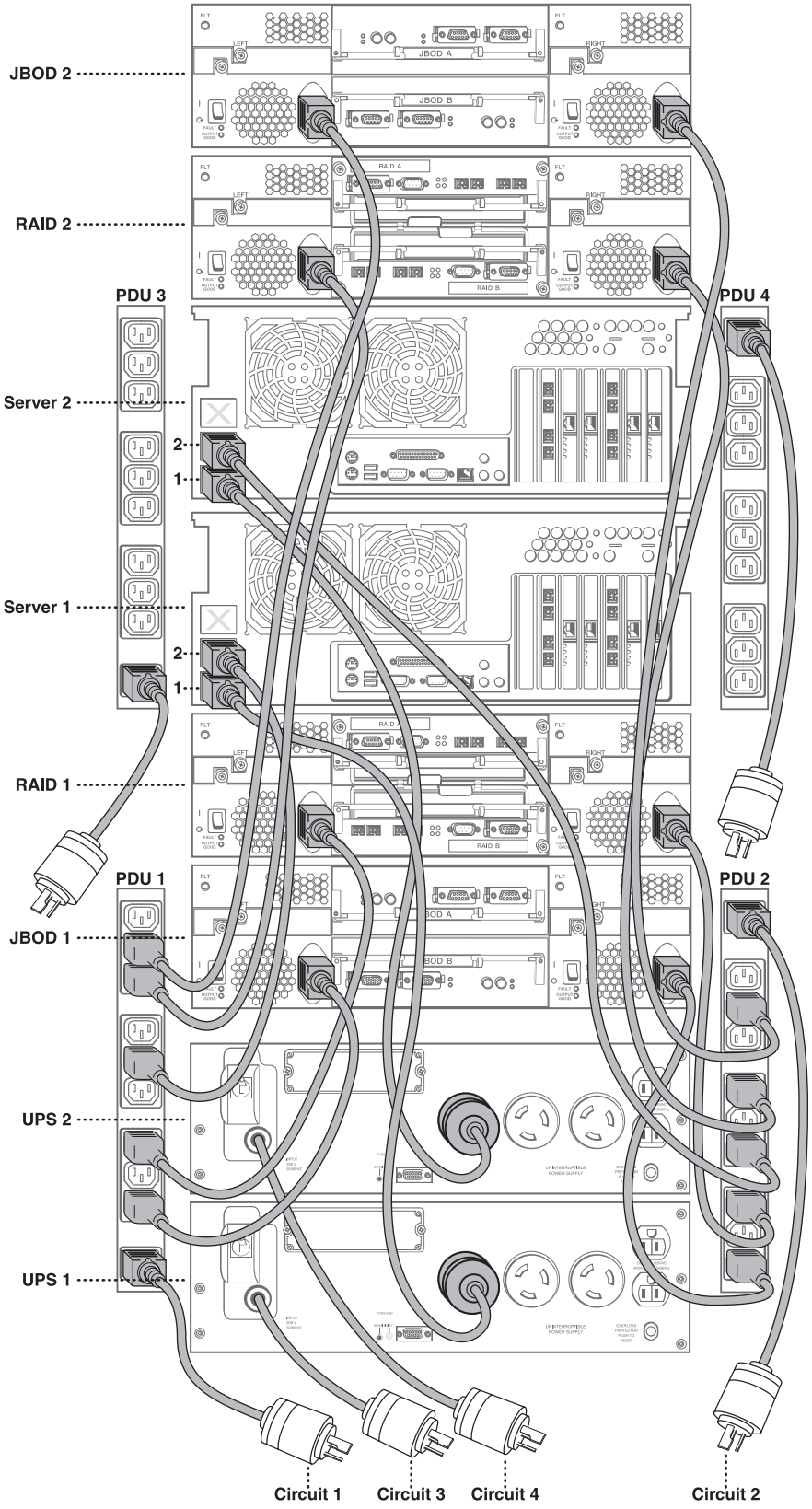

Figure 11-4. A power configuration with two of each of the following components: SpinServer, SpinStor RAID, SpinStor JBOD, and 208-volt UPS

12.0 Powering Up the System

Before powering up the SpinServer system components, verify the installation of the SpinServer chassis and the SpinStor enclosures.

12.1 Checking the Equipment

Check the chassis components in the SpinServer and enclosure components in the SpinStor RAID and JBOD.

Caution: Condensation can occur during shipment. It is important to allow the equipment to warm to room temperature before installation.

SpinServer

For the SpinServer, ensure that the SCSI drive carriers, fans, and power supply units are fully inserted and secure in the SpinServer chassis before powering up the system.

SpinStor RAID and JBOD

For the SpinStor disk enclosures, ensure that the disk carriers, RAID and JBOD modules, blowers, and power supply units are fully inserted and secure in the disk enclosures before powering up the system.

12.2 Powering Up the SpinServer System

To start your SpinServer system, turn on the components in the following order:

1. UPS
2. SpinStor JBOD

3. SpinStor RAID
4. Backup system
5. SpinServer

UPS

To power on the APC UPS, plug the UPS into the power source. As shown on the following figure, press and release the button labeled **| TEST**.

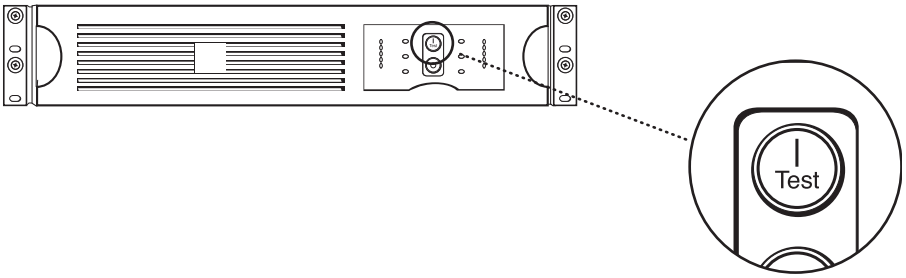

Figure 12-1. Press the **|Test** power button on the 120 volt UPS.

For further information, see the *APC Smart-UPS User's Manual*, which is included in the box with the UPS.

SpinStor JBOD

Power up the SpinStor JBOD enclosures by using the power switches at the back of the enclosure, as shown here. Turn on both switches.

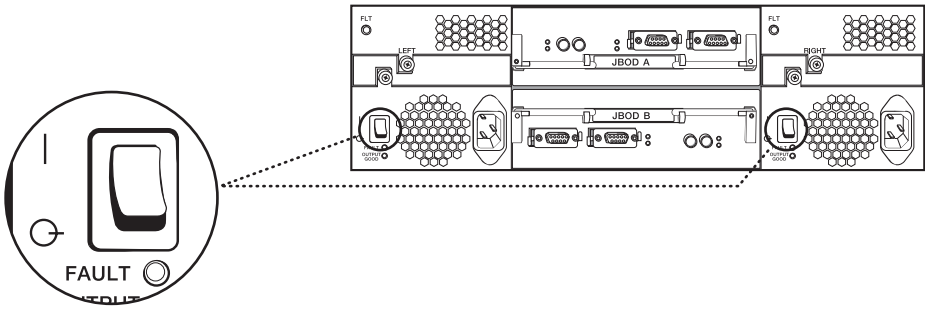

Figure 12-2. Turn on both power switches.

The light emitting diodes (LEDs) on the front of the enclosure blink red and then blink blue as the enclosure spins up the disks. The LEDs remain a steady blue when the disks are ready for use.

Note: All SpinStor JBOD (LEDs) are discussed in the chapter "Troubleshooting" on page 135.

SpinStor RAID

After the SpinStor JBOD enclosures are powered up, power up the SpinStor RAID enclosures by using the power switches at the back of the SpinStor RAID, as shown here. Turn on both switches.

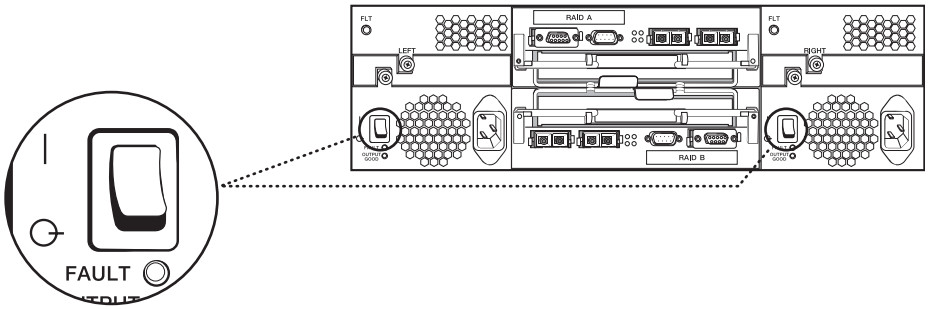

Figure 12-3. Turn on both power switches.

The LEDs on the front of the enclosure blink red and then blink blue as the enclosure spins up the disks. The LEDs remain a steady blue when the disks are ready for use.

Note: All SpinStor RAID LEDs are discussed in the chapter “Troubleshooting” on page 135.

Note: After the SpinStor RAID is powered on, it takes several minutes for the RAID controllers to be initialized. The CTL FLT LED remains red during this process.

It is recommended that you wait for the CTL FLT LED to go off before powering on the SpinServer. This assures that the RAID controllers are properly initialized and are ready to communicate with the SpinServer.

JBOD Communication

After the RAID controllers are initialized, check for JBOD communication. The GOOD and FLT LEDs near the GBICs indicate the status of JBOD communication with the RAID controllers. If the communication links are working, the JBOD GOOD LED is illuminated. If the communication links are not working, the JBOD FLT LED is illuminated.

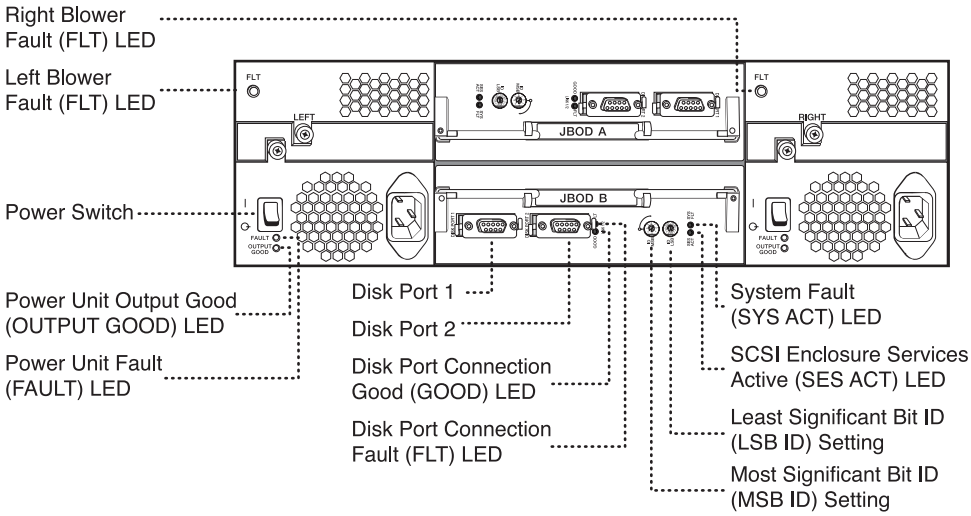

Figure 12-4. SpinStor JBOD LEDs

Backup Equipment

To power on your backup equipment, follow these steps:

1. Do not power up the SpinServer.
2. Power up all the other SpinServer system components, including the tape drives.
3. Wait for 30 seconds to ensure that all SpinServer system components are ready.
4. Perform Fibre Channel discovery on all Fibre Channel routers, gateways, and switches.
5. Power up the SpinServer.

Note: If the power up sequence is not successful, repeat Step 4 again and include the SpinServer in performing Fibre Channel discovery.

SpinServer

To power on the SpinServer, press the power button on the front panel and release quickly.

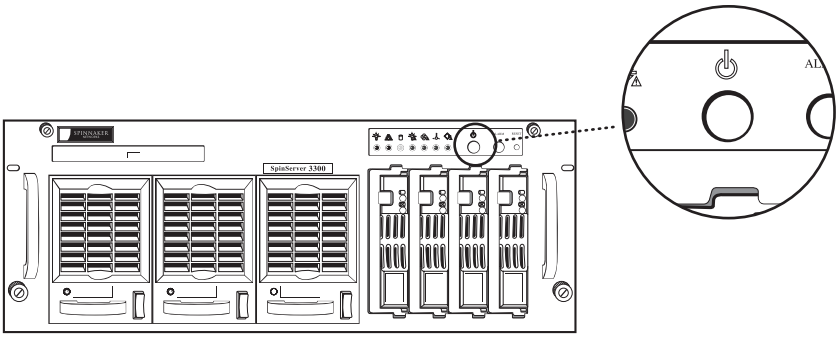

Figure 12-5. Press the power button on the front panel of the SpinServer.

RAID Communication

After the SpinServer has initialized its Fibre Channel ports, check for RAID communication. The HST FLT LED near the GBICs indicates the status of RAID communication with the SpinServer. If the communication links are working, the RAID HST FLT LED is not illuminated. If the communication links are not working, the RAID FLT LED is illuminated.

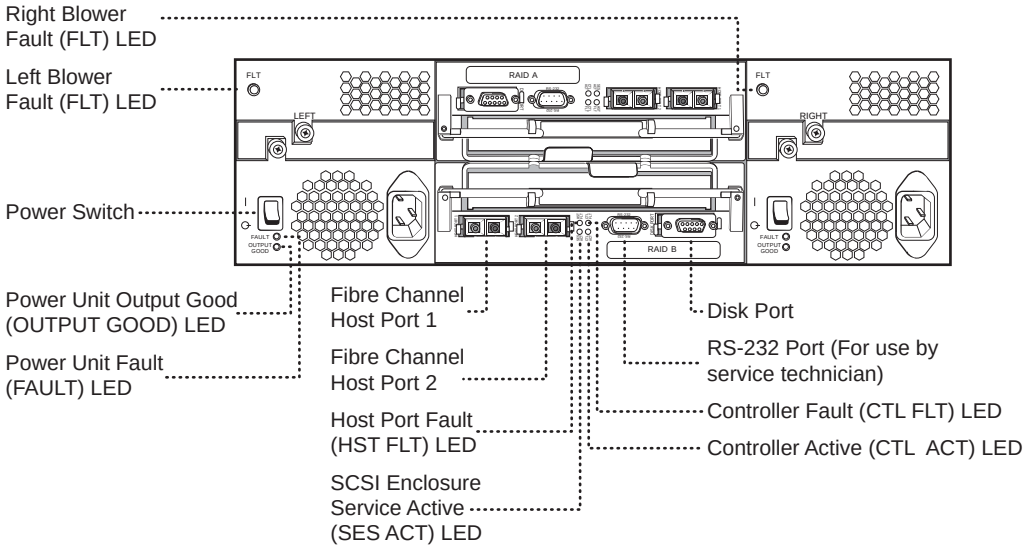

Figure 12-6. SpinStor RAID LEDs

Note: All SpinServer LEDs are discussed in the chapter “Troubleshooting” on page 135.

13.0 Powering Down the System

When powering down the system, it is important to follow the shutdown procedures so that the SpinServer can send a signal to the disk enclosure to save data. This provides the system with the time necessary to properly save all data before the power is turned off.

13.1 Stopping the SpinServer System

To stop your SpinServer system, turn off the components in the following order:

1. SpinServer
2. SpinStor RAID
3. SpinStor JBOD
4. Backup system
5. UPS

Note: This order is the recommended sequence for shutting down the SpinServer system. However, it is possible to shut down the RAID and JBOD components first and then shut down the SpinServer.

Turn Off Power to the SpinServer

Note: It is not recommended that the Reset button be used to restart the SpinServer because this method does not provide the system with the time necessary to properly save all data.

To power down the SpinServer, use one of these methods.

- Log onto the system as root and run the UNIX **`poweroff`** command. After the **`poweroff`** command is completed, it is safe to turn off the SpinServer by pressing the power button on the front panel.
- Press the power button on the front panel of the SpinServer. The SpinServer runs the **`shutdown`** command. When the button is pressed, the power LED flashes green once per second while the shutdown routine is performed. The shutdown routine takes about 18 seconds to complete.

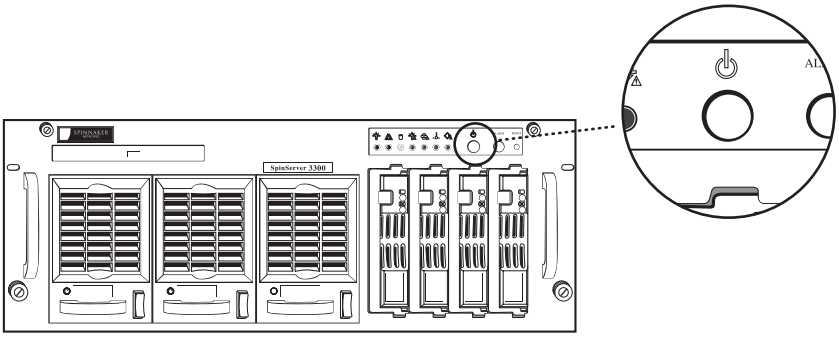

Figure 13-1. Press the power button on the front panel of the SpinServer.

Note: This shutdown routine can be overridden by holding the power button down for more than 5 seconds. However, this can cause loss of data because the file system logs have not been previously saved. Overriding the shutdown routine is safe only if the file system logs have been written to disk.

After the shutdown process is finished, the power LED for the SpinServer is no longer illuminated and the LEDs for the power supplies display red.

Turn off Power to the SpinStor RAID

After powering down the SpinServer, it is safe to turn off the power to the SpinStor RAID. Use the power switches at the back of the enclosure, as shown here. Turn off both switches.

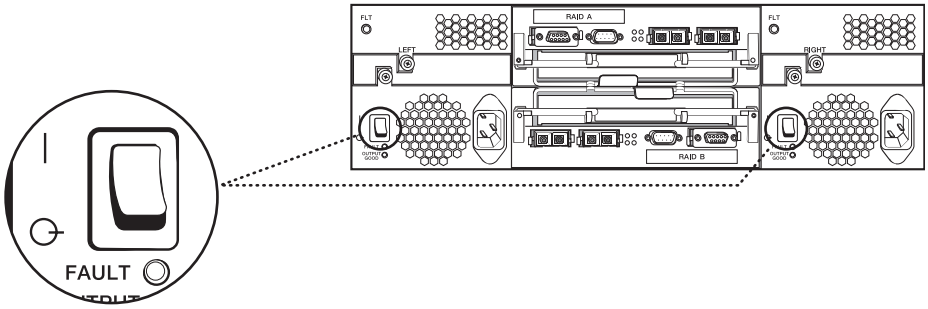

Figure 13-2. Turn off both power switches.

The LEDs on the front of the SpinStor RAID no longer display pulsing lights. The fans in the power supplies continue to run for about 15 seconds after the power has been turned off.

Turn off Power to the SpinStor JBOD

After powering down the SpinStor RAID, it is safe to turn off the power to the SpinStor JBOD. Use the power switches at the back of the enclosure, as shown here. Turn off both switches.

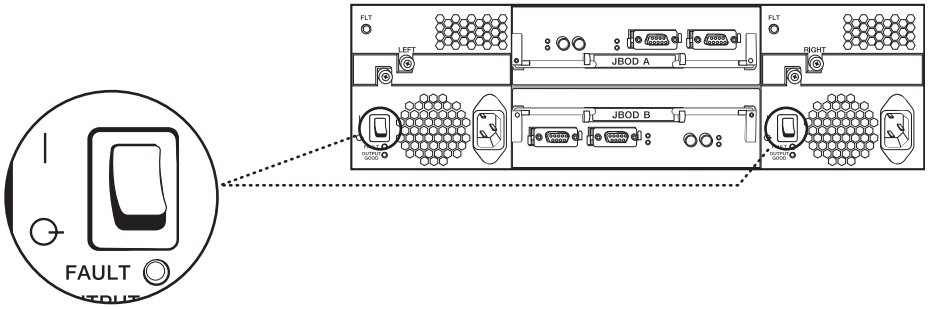

Figure 13-3. Turn off both power switches.

The LEDs on the front of the enclosure no longer display pulsing lights. The fans in the power supplies continue to run for about 15 seconds after the power has been turned off.

Turn Off Power to Backup Equipment

To turn off your backup equipment, see the manufacturer's guidelines.

Shut Down the UPS

To shut down the UPS, refer to the *APC Smart-UPS User's Manual*, which is included in the box with the UPS.

Part IV: Troubleshooting

Part IV includes the following chapters:

Chapter 14: Troubleshooting

Chapter 14 provides hardware troubleshooting information for the SpinServer and the SpinStor. See page 135.

Chapter 15: Disk ID Settings

Chapter 15 provides information and a specific example about setting the disk IDs for your SpinStor JBOD disk enclosures. See page 149.

Chapter 16: Technical Assistance Center

Chapter 16 provides information about contacting the Spinnaker Technical Assistance Center. See page 153.

14.0 Troubleshooting

This chapter describes the SpinServer and disk enclosure LEDs and fault indicators and discusses hardware troubleshooting techniques.

14.1 SpinServer Front Panel Switches and LEDs

The front panel of the SpinServer includes several LED indicators, audible alarms, and switches.

The LEDs provide information about the operational status of specific components in the SpinServer chassis. Use the three push-button switches to take appropriate action, if necessary, based on the LED and audible alarm information.

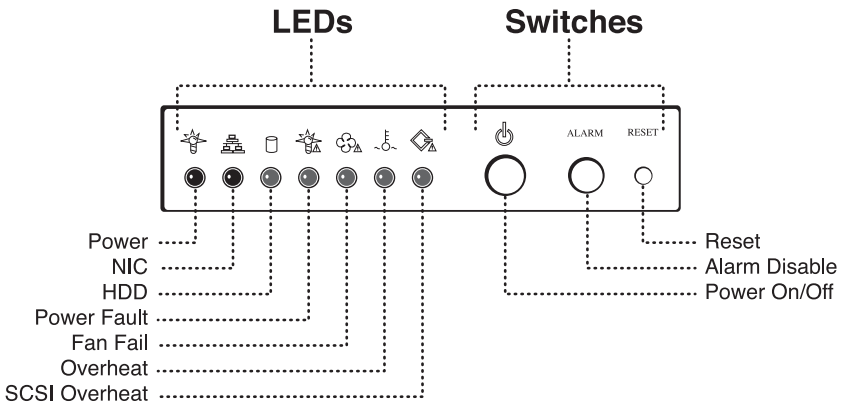

Figure 14-1. The LEDs and switches on the front panel of the SpinServer

SpinServer Front Panel LEDs

The front control panel has seven LEDs. They provide you with important information about the operational status of specific components of the SpinServer chassis. Descriptions of the LEDs, their messages, and the actions that you must take follow.

Power: This LED indicates power is being supplied to the SpinServer power supply units. It is illuminated when the system is operating.

If the power LED is not illuminated, verify that all power cords are properly connected and the UPS is plugged into a grounded wall outlet. Also, verify that the output of the UPS is turned on.

If the power cords are properly connected and the LED is red, a power unit needs to be replaced. Check the power supply LEDs at the front of the SpinServer to determine which one needs to be replaced.

NIC: When flashing green, the network interface card (NIC) connection LED indicates activity on the motherboard.

HDD: When flashing green, the hard disk drive (HDD) LED indicates IDE activity. The CD-ROM is the only drive connected to the IDE bus.

PWR Fault: When illuminated red, this LED indicates a power supply unit failure. It is accompanied by an audible alarm. The alarm can be disabled with the ALARM push-button switch on the front panel.

In the event of a power supply failure, immediately replace the faulty power supply unit. The power supply units can be hot swapped. You do not need to power down the system to replace it.

Note: Only one power supply unit can be replaced at a time.

Fan Fail: When illuminated red, this LED indicates a system fan failure. The failure is in one or more of the intake or exhaust fans. A fan failure is accompanied by an audible alarm. Pushing the ALARM button can disable this alarm.

When a fan stops working, the other system fans increase their revolutions per minute (RPM) to compensate until the failed unit is replaced. In the event of a fan failure, check the fan LEDs and quickly replace the failed unit. All fans are hot swappable. You do not need to power down the system to replace a fan.

Note: Only one fan can be replaced at a time.

Warning: To prevent personal injury, always allow the fans to spin down before removing the fan assembly.

Warnung: Um Verletzungen zu vermeiden, sollte vor dem Entfernen der Ventilatorbaugruppe gewartet werden, bis die Ventilatoren zum Stillstand gekommen sind.

Overheat: When illuminated red, this LED indicates an overheated condition in the chassis. Check for the following problems and make corrections:

- Cables are obstructing the airflow.
- Ambient room temperature is too high.
- The chassis cover is improperly installed.
- Not all fans are in place and functioning properly.

SCSI Overheat: The Single Connector Attachment (SCA) is a type of disk drive connector that includes connection pins for power cables and data wires. When the SCSI drives LED is illuminated red, it indicates an overheated condition in the area of the SCSI drives and backplane. Check for the following problems and make corrections:

- Cables are obstructing the airflow.
- Ambient room temperature is too high.
- The chassis cover is improperly installed.
- Not all fans are in place and functioning properly.

SpinServer Front Panel Switches

There are three push-button switches on the front of the SpinServer: Power On/Off, Alarm Disable, and Reset. Descriptions of their purposes follow.

Power: This is the main power switch. It is used to turn on or off the power that is supplied to the power supply units in the SpinServer.

Alarm: An audible alarm is generated to alert you to chassis overheating or failure of fan or power supply. Depressing the ALARM switch disables the alarm. The LED indicating the cause of the alarm remains illuminated after the audible alarm is disabled.

Reset: The RESET switch restarts the SpinServer.

Note: It is not recommended that the **Reset** button be used to restart the SpinServer because this method does not provide the system with the time necessary to properly save all data.

14.2 Additional LEDs on the SpinServer

There are additional LED indicators on the SpinServer chassis: SCSI drives and power supply units.

SpinServer SCSI Drive Carrier LEDs

Each SCSI drive has two LEDs on the front of the drive carrier; the top LED is green and the bottom one is red.

Note: The leftmost SCSI drive slot is labeled Slot 0. The drives in Slot 0 and Slot 1 are active drives. The drives in Slots 2 and 3 are not active drives. The LEDs on the inactive drives are not illuminated.

When the green LED is illuminated, the drive is being accessed. When the red LED is illuminated, the SCSI drive has experienced a fault or has failed.

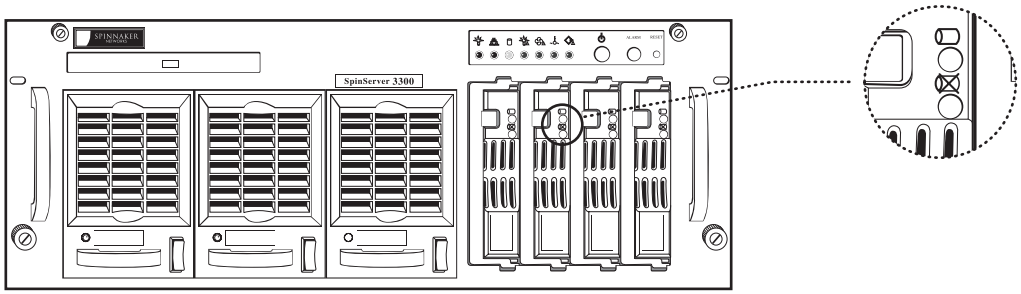

Figure 14-2. The SCSI drive carrier LEDs

Note: If one of the SCSI drives experiences a fault or fails, contact the Spinnaker Networks Technical Assistance Center.

SpinServer Power Supply LEDs

The SpinServer power supply LEDs are described in this section.

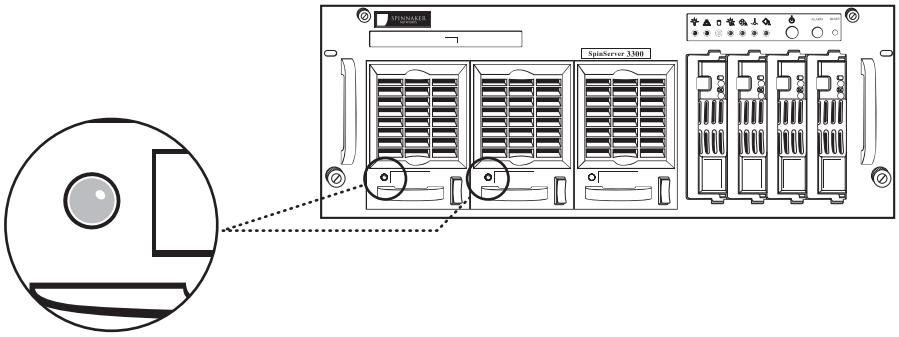

Figure 14-3. The power supply LED

Note: The third power supply unit is not an active unit.

Each power unit has a single LED that can be illuminated either red or green or not be illuminated.

LED Green

When the power unit has AC power supplied to it and the SpinServer is powered on, the LED is green. This indicates that the unit is operating normally.

LED Red

A red LED is normal only when the system has been turned off and is not operating.

If the system is operating and the LED is red, it indicates one of the following problems:

- No power is being applied to that particular power supply unit. Before replacing the

power supply unit, check to make sure that the power cord for that unit is plugged into both the power unit and a grounded wall outlet or power distribution unit (PDU).

- That particular power unit has failed.

LED Off

If both AC power cords are disconnected, the LEDs on both power supply units are not illuminated.

Note: If the AC power cord for one of the power supply units is disconnected, the LED is red for that power supply unit.

There is an audible alarm when AC power is absent from one power supply unit but the other power supply unit is operating normally. The LED for the power supply unit without AC power is not illuminated.

In the event of a power supply failure, immediately replace the faulty power supply unit. The power supply units can be hot swapped. You do not need to power down the system to replace one.

Note: Only one power supply unit can be replaced at a time.

14.3 SpinStor LEDs and Fault Indicators

The LEDs and fault indicators provide information about the operational status of specific components in the SpinStor RAID and JBOD enclosures.

SpinStor Front Panel LEDs

The following illustration shows the location of the status indicators on the front panel of each disk carrier.

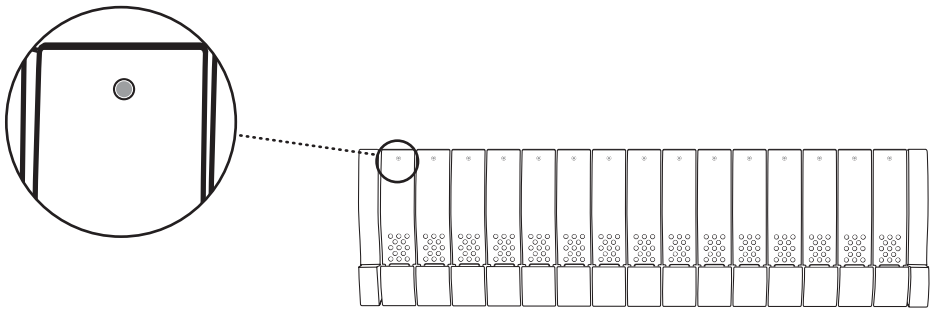

Figure 14-4. The front panel LEDs on the SpinStor RAID or JBOD

Individual Disk Carrier LEDs

A blue LED on a disk carrier indicates normal drive activity. A red LED indicates disk drive error or warning.

A blinking red LED on an individual disk carrier can indicate one of the following:

- A disk drive failure. (In the case of a disk drive failure, the audible alarm sounds.)
- You have used the **`raid diskdrives locate`** command to locate a disk in the disk enclosure. After the **`raid diskdrives locate`** command is used, the LED on the located disk continues to blink red for the time interval that is specified in the command.

SpinStor Raid and JBOD Enclosure LEDs

A pulsing blue light on all disk carriers indicates normal disk drive activity.

Blinking red LEDs on disk carriers in disk enclosures can indicate one of the following:

- A system fault. A system fault is either a single power supply failure, single blower failure, or double blower failure. Check the LEDs at the back of the enclosure to determine which device has failed. Also, listen for the audible alarm. A repeated sequence of beeps indicates device failure. Five beeps indicate a power supply failure; three beeps indicate a blower failure.
- You have used the **`raid enclosure locate`** command to locate a disk enclosure.

SpinStor Raid Enclosure LEDs

A pulsing blue light on all disk carriers indicates normal disk drive activity.

Blinking red LEDs on disk carriers in disk enclosures can indicate one of the following:

- You have used the **`raid sets locate`** command to locate the disk drives included in a RAID set. After the **`raid sets locate`** command is used, the LEDs on the located disks in the enclosure continue to blink red for the time interval that is specified in the command.
- A RAID set is in a critical state. A critical state indicates that a disk carrier has been removed from the RAID set.
- A RAID set is being rebuilt by using the **`raid sets startrebuild`** command.
- The consistency of a RAID set is being checked by using the **`raid sets startconsistencycheck`** command.

SpinStor Fault Indicators

The following illustrations shows the location of the fault indicators on the back of the SpinStor.

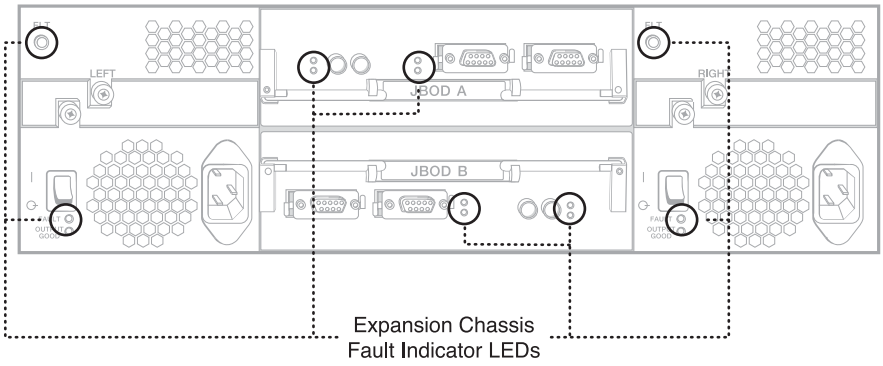

Figure 14-5. The fault indicator LEDs on the back of the SpinStor JBOD enclosure

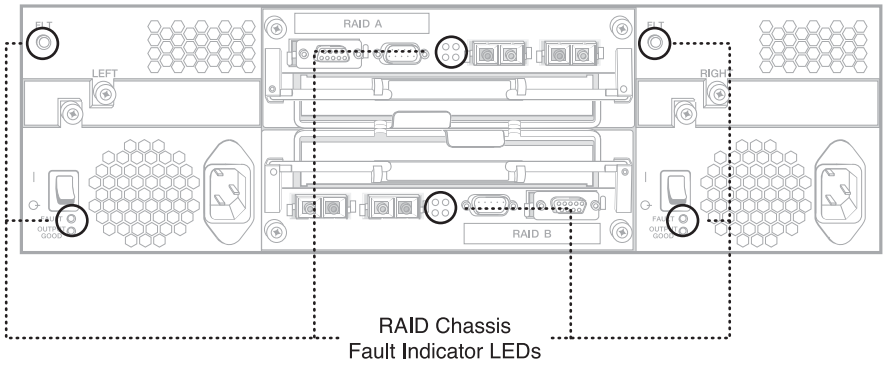

Figure 14-6. The fault indicator LEDs on the back of the SpinStor RAID enclosure

SpinStor JBOD LEDs

The SpinStor JBOD LEDs are detailed in the following illustration.

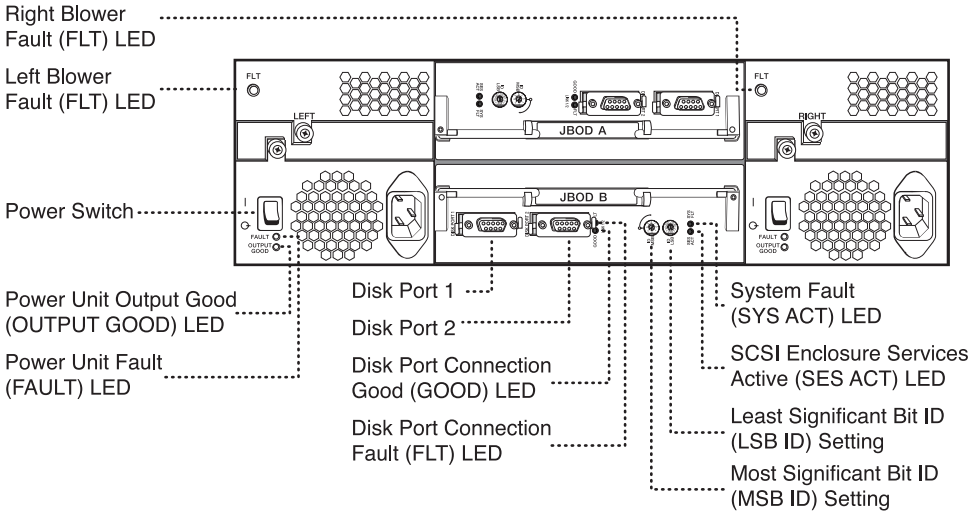

Figure 14-7. SpinStor JBOD LEDs

Power: The green OUTPUT GOOD LED is illuminated when the power supply is functioning properly. The yellow FAULT LED is illuminated when power is not being supplied by the power supply unit.

If the FAULT LED is illuminated, verify that all power cords are properly plugged into the power strip and the power strip is plugged into a grounded wall outlet and switched on.

If the power cords are properly connected, the power unit needs to be replaced. The power units can be hot swapped. You do not need to power down the system to replace a power unit.

Note: Only one power supply unit can be replaced at a time.

Blower: When the blower LED is illuminated red, the blower has failed and needs to be replaced. The blower units can be hot swapped.

Note: Only one blower can be replaced at a time.

Warning: To prevent personal injury, always allow the blowers to spin down before removing the blower assembly.

Warnung: Um Verletzungen zu vermeiden, sollte vor dem Entfernen der Gebläsebaugruppe gewartet werden, bis das Gebläse zum Stillstand gekommen ist.

SES ACT: The green SCSI enclosure Services (SES) Active LED is illuminated while the module is responding to an SES inquiry.

SYS FLT: The red System Fault LED is illuminated when there is a blower or power supply failure or an overheated condition. Check for the following problems and make corrections.

- Cables are obstructing the airflow.
- Ambient room temperature is too high.
- Not all blowers are in place or functioning properly.
- Not all power supplies are in place or functioning properly.

Disk Port: The Disk Port LEDs are labeled GOOD/FLT and are illuminated green when a disk port connection is detected. They are illuminated red when no disk port connection is detected. If the cable is properly connected, check to determine whether one of the following has failed:

- Cable
- JBOD
- GBIC
- HBA port
- PCI slot

SpinStor RAID LEDs

The SpinStor RAID LEDs are detailed in the following illustration.

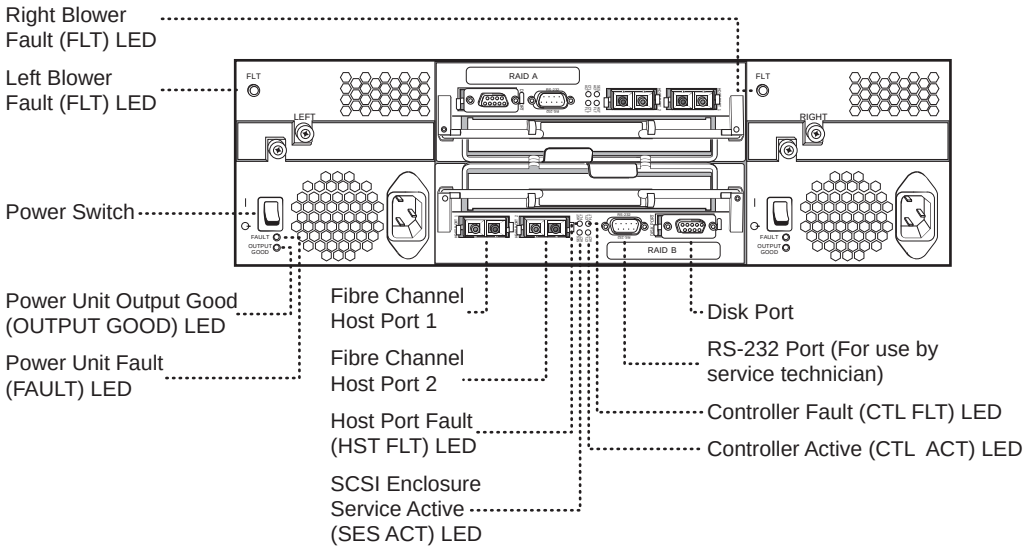

Figure 14-8. RAID LEDs

SES ACT: The green SCSI enclosure Services (SES) Active LED is illuminated while the module is responding to an SES inquiry.

CTL ACT: The green Controller Active LED is illuminated to indicate RAID controller activity.

CTL FLT: The red Controller Fault LED is illuminated if the controller is not ready or has a fault or error condition.

Note: After the SpinStor RAID is powered on, it takes several minutes for the RAID controllers to be initialized. The CTL FLT LED remains red during this process.

It is recommended that you wait for the CTL FLT LED to go off before powering on the SpinServer. This assures that the RAID controllers are properly initialized and are ready to communicate with the SpinServer.

If the CTL FLT LED remains on during the setup process, check the I/O modules or RAID controllers to ensure that they are secure and properly seated in the SpinStor.

If the problem persists after the RAID controllers or I/O modules are carefully seated in the enclosure, one or both of the RAID controllers or I/O modules must be checked for defects.

Contact the Spinnaker Technical Assistance Center for further information. See the chapter “Technical Assistance Center” on page 153 for contact information.

HST FLT: The Host Port Fault LED is illuminated red when no host port connection is detected. (This LED is next to the paired GBICs.) If at least one cable is properly connected, check to determine whether one of the following has failed:

- Cable
- JBOD
- GBIC
- HBA port
- PCI slot

14.4 Power Connection Troubleshooting

If power is not supplied to a SpinServer system component, you need to check the power cord connections and the circuit breakers on the PDUs.

Power Cord Connections

If power is not supplied to a SpinServer system component, check all the power cord connections, as shown in the following illustration

.

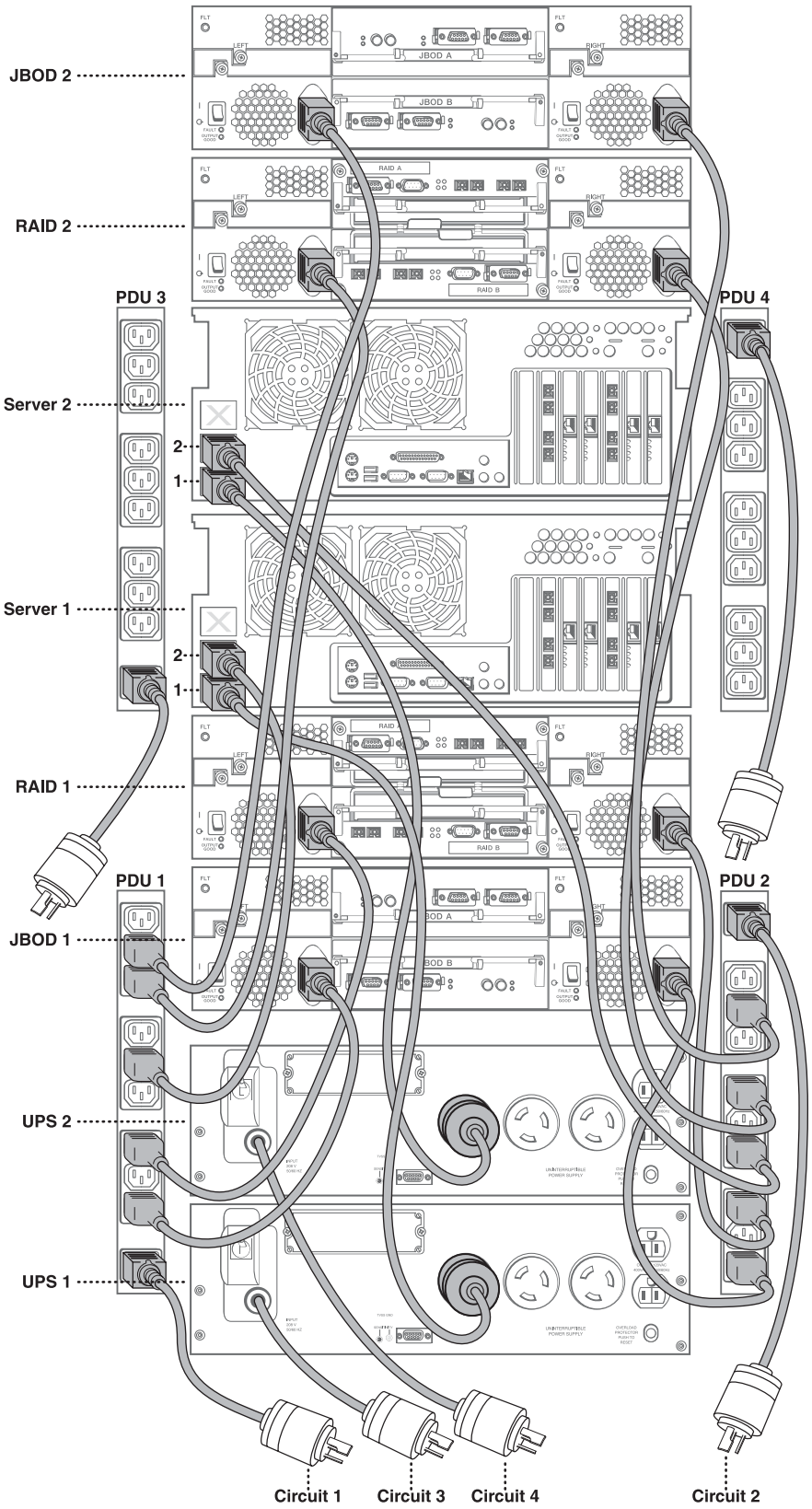

Figure 14-9. Power cord connections

Circuit Breakers

If you are using a Spinnaker rack, it has four PDUs and each PDU has a circuit breaker, as shown in the following illustration. If all the power cords are properly connected, check the circuit breaker for each PDU.

A circuit breaker is tripped if there is a power overload. To reset the circuit breaker, press the button on the PDU.

Note: If access is limited to the circuit breaker from the rear of the rack, remove the side panel of the rack to reach the circuit breaker button.

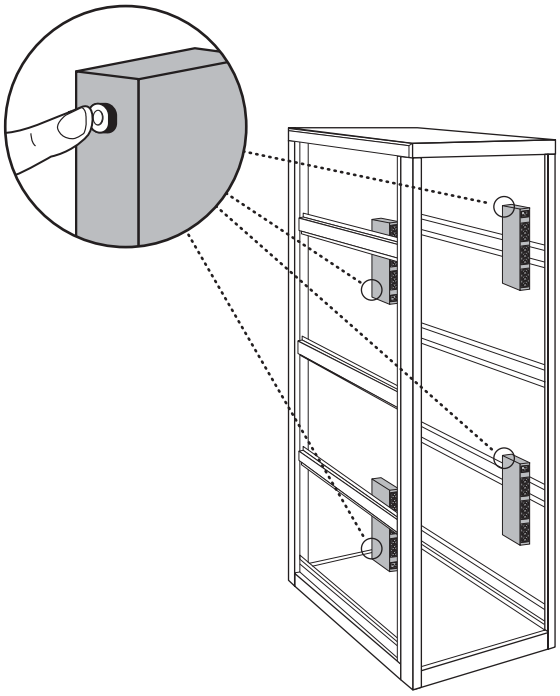

Figure 14-10. Spinnaker rack with PDUs

14.5 Disk Enclosure Troubleshooting

Review the following disk enclosure troubleshooting information before calling the Spinnaker Technical Assistance Center. See the chapter “Technical Assistance Center” on page 153 for contact information.

System Communication

If either a SpinStor RAID or JBOD is not recognized, ensure that all RAID and JBOD modules are fully inserted and secure in the enclosure.

Disk Drive I/O Modules

Use the **raid diskdrives show** command to display general information about all disks in a RAID subsystem or specific information about one disk.

```
spinserverID::> raid diskdrives show
```

The listing of disk drives indicates the Fibre Channel to which the disk drive is attached. During normal operation, half of the disk drives are on Channel 0 and the other half are on Channel 1.S

If the disk drive listing shows all of the drives on Channel 0 or all the disk drives on Channel 1, check the I/O modules and cables to ensure that they are all properly seated. After checking all modules and cables for proper connections, go through a power cycle by shutting down the SpinServer, powering off the disk enclosure, reseating the I/O modules, and powering on the disk enclosure.

Disk Drive Enclosures

To display a listing of the RAID or JBOD enclosures in your RAID subsystem, use the **raid enclosures show** command. Disk enclosures are attached by Fibre Channel to the SpinServer. The command displays information about one disk enclosure or all disk enclosures. To display information about one disk enclosure, use the parameter.

```
spinserverID::> raid enclosures show
```

Use the **raid subsystems discoverenclosures** command to locate the missing enclosure.

```
spinserverID::> raid subsystems discoverenclosures -id r0
```

where

r0 is the RAID subsystem ID.

If the enclosure still cannot be located, contact Spinnaker Technical Assistance Center for further information.

Replacing Expansion JBOD or RAID Blowers

The blowers for the expansion JBOD and RAID enclosure are right- and left-specific. Ensure that you replace a defective left or right blower with the correct one.

Debugging RAID Subsystem Configuration

To provide Spinnaker service technicians with configuration information to assist you in debugging your SpinServer system, use the **`raid subsystems dumpconfig`** command. After the **`raid subsystems dumpconfig`** command is used, the specified file contains the following RAID subsystem configuration information: RAID subsystem ID, online status, host connections, SpinServer ID, RAID controller IDs, RAID set IDs, battery ID, the number of enclosures, and the number of disk drives.

The following command example dumps the RAID subsystem configuration information into the specified file.

```
spinserverID::> raid subsystems dumpconfig -id r0 -file
/root/dump
```

15.0 Disk ID Settings

This chapter provides information about setting the IDs for the disks in the SpinStor JBOD enclosure.

SpinStor disks are identified by IDs. Disk IDs are determined by the target number and the channel number, by using the following formula.

Disk ID = **2 x target number + default channel number**

The target number is based on the physical location of the disk in the enclosure and the settings of that enclosure. The channel number is either 0 or 1. Each disk has two Fibre Channel ports, channel 0 and channel 1. The RAID controller chooses a default channel for each disk.

Note: All disk drives must have unique IDs. Nonunique disk IDs within a RAID subsystem can cause loss of data.

The following illustration shows the disk slot-numbering sequence for all SpinStors. When you face the disk enclosure, the disk slot on your right is Slot 0.

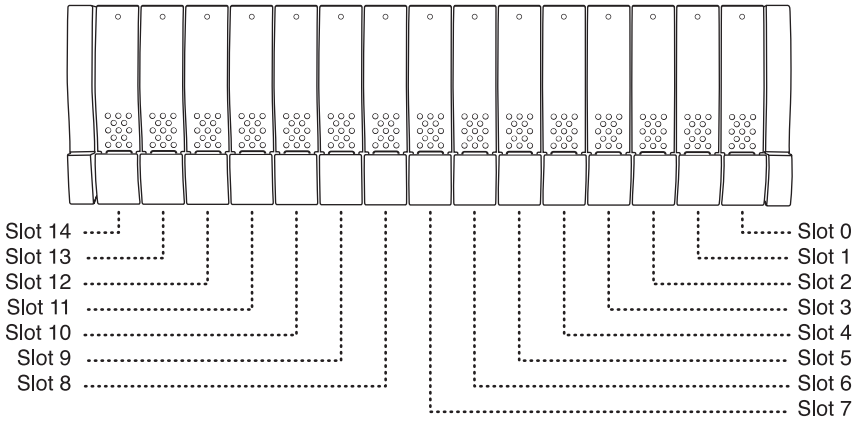

Figure 15-1. The slot settings on the SpinStor enclosure

The base target number for each SpinStor JBOD is set with the rotary switches that are located at the back of the disk enclosure. This is shown in the following figure. The 0 – 7 position rotary switch is labeled most significant bit (MSB), and the second rotary switch, the 0 – F switch, is labeled least significant bit (LSB).

Note: The disk target number for the SpinStor RAID is set at 0 at the factory.

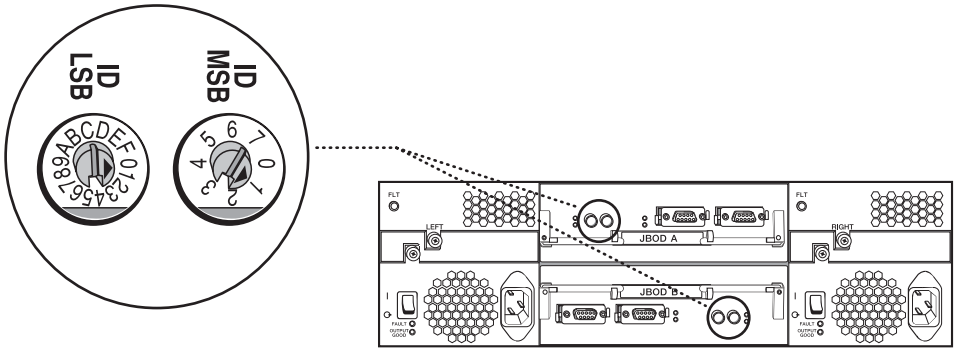

Figure 15-2. The rotary switches on the back of the SpinStor JBOD

For the first expansion SpinStor JBOD, set the base target number to hex 10, with the MSB switch set at 1 and the LSB switch set at 0.

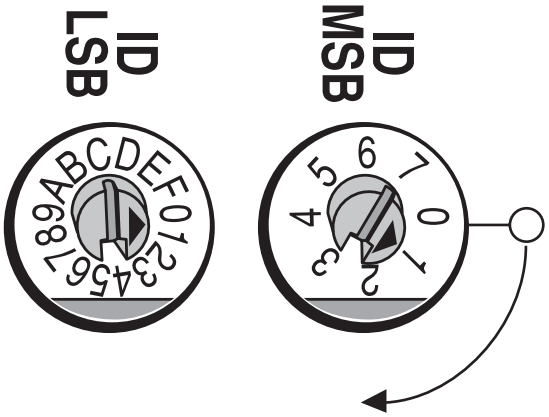

Figure 15-3. MSB and LSB switches are set to 1 and 0.

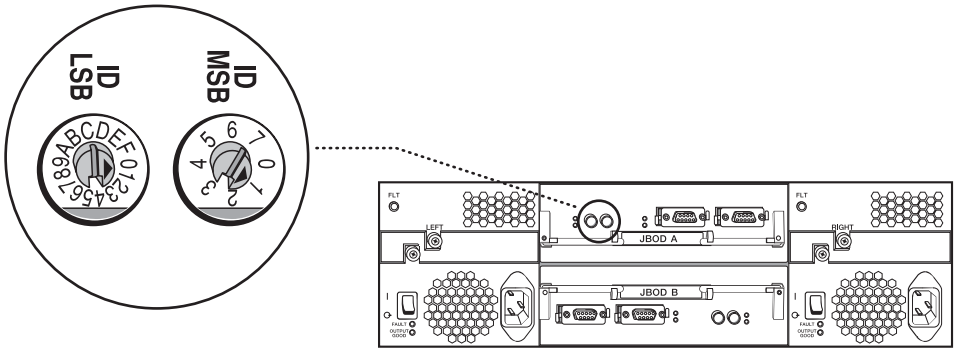

Figure 15-4. The MSB and LSB switches on the SpinStor JBOD

Note: The switches on the upper I/O module are in reverse positions of those on the lower I/O module. Be sure that both sets of switches are always set to identical values.

The target numbers of the other 14 disk drives on a 15-bay enclosure are automatically set sequentially, beginning with the base target number, by the disk enclosure.

A second expansion SpinStor JBOD disk enclosure follows the same pattern for its disk target numbers, with the base target number starting at hex 20. The third, and fourth SpinStor JBOD also follows this pattern with base target numbers set to hex 30 and hex 40, respectively.

The fifth SpinStor JBOD must be set to hex 4F to enable the two RAID controllers to obtain two sequential target numbers. The sixth and seventh disk enclosures have a different pattern, with the Slot 0 base target number switches set to hex 60 and hex 6F, respectively.

The formula for determining the target number is: **(16 x MSB) + LSB + slot**. For example, the disk in Slot 6 of the second SpinStor JBOD has a target number of 38.

The following table illustrates the switch settings and target numbers for the disks in each of the JBOD enclosures.

Table 15-1. Disk ID Settings for JBODs

SpinStor	1	2	3	4	5	6
SpinStor Type	**RAID**	**JBOD**				
MSB Setting	0	1	2	3	4	4
LSB Setting	0	0	0	0	0	F
Slot 0	0	16	32	48	64	79
Slot 1	1	17	33	49	65	80
Slot 2	2	18	34	50	66	81
Slot 3	3	19	35	51	67	82
Slot 4	4	20	36	52	68	83
Slot 5	5	21	37	53	69	84
Slot 6	6	22	38	54	70	85
Slot 7	7	23	39	55	71	86
Slot 8	8	24	40	56	72	87
Slot 9	9	25	41	57	73	88
Slot 10	10	26	42	58	74	89
Slot 11	11	27	43	59	75	90
Slot 12	12	28	44	60	76	91
Slot 13	13	29	45	61	77	92
Slot 14	14	30	46	62	78	93

16.0 Technical Assistance Center

16.1 Contacting Technical Support

You can contact Spinnaker's Technical Assistance Center (TAC) 24 hours a day and seven days a week. Use the three methods listed here.

Internet

Access TAC from the home page at http://www.spinnakernet.com/support

Email

Send email queries to Spinnaker TAC at:

support@spinnakernet.com

Phone

In North America, call Spinnaker TAC toll free at:

1-866-SPINNET or 1-866-774-6638

After you are connected, press 1 through the automated attendant to reach TAC.

Outside North America, call:

+1-412-968-SPIN or +1-412-968-7746

16.2 SpinServer Information

When you call the TAC, it is important to have available the information in the following table.

For future reference, record the information from your customer order form. This information is also available from the GUI on your SpinServer.

Support contract ID (if applicable)	
SpinServer chassis serial number	
Software version	
File system access protocol	
Description of hardware setup	
Hardware interfaces	
Number of disk arrays attached	
JBOD or RAID	

Part V: Appendixes and Notices

Part V includes the following chapters:

Chapter 17: Appendix A: EMC Statements

Chapter 17 provides information about the electromagnetic compatibility (EMC) for the SpinServer and the SpinStor. See page 157.

Chapter 18: Appendix B: Regulatory Compliance Review

Chapter 18 provides a review of all the product conformity and safety standards to which the SpinServer and SpinStor products comply. See page 159.

Chapter 19: Appendix C: Third Party Licenses

Chapter 19 provides information about the licenses for third party software used in the SpinServer product. See page 167.

Chapter 20: Glossary

Chapter 20 provides a glossary of commonly used terms in Spinnaker Networks documentation. See page 189.

Chapter 21: Notices

Chapter 21 provides product and trademark information for Spinnaker Networks products. See page 193.

17.0 Appendix A: EMC Statements

The following statements of electromagnetic compatibility (EMC) are given for the SpinServer and the SpinStor.

17.1 FCC Class A

The SpinServer and SpinStor comply with the Class A Federal Communications Commission (FCC) rule stated below:

This equipment has been tested and found to comply with the limits for a Class A digital device, pursuant to part 15 of the FCC Rules. These limits are designed to provide reasonable protection against harmful interference when the equipment is operated in a commercial environment. This equipment generates, uses, and can radiate radio frequency energy and, if not installed and used in accordance with the instruction manual, may cause harmful interference to radio communications. Operation of this equipment in a residential area is likely to cause harmful interference in which case the user will be required to correct the interference at his own expense.

17.2 ICES-003 Class A

The SpinServer and SpinStor comply with the Class A Interference-Causing Equipment Standard (ICES-003) rule stated below:

This Class A digital apparatus complies with Canadian ICES-003.

Cet appareil numérique de la classe A est conforme à la norme NMB-003 du Canada.

18.0Appendix B: Regulatory Compliance Review

This chapter provides information about the regulatory compliance reviews for the SpinServer, SpinStor RAID, and SpinStor JBOD.

18.1 Regulatory Summary for the SpinServer

The regulatory summary for the SpinServer is listed in the following table:

Table 18-1. Regulatory Summary for the SpinServer

Safety	
USA	UL Listed UL60950
Canada	C-UL Listed CAN/CSA-C22.2 No. 60950
EU	CE Marking 73/23/EEC EN60950
Emissions	
USA	FCC CFR47 Part 15 Class A
Canada	ICES-003 Class A
EU	CE Marking 89/336/EEC EN55022 Class A EN61000-3-2 EN61000-3-3

Table 18-1. Regulatory Summary for the SpinServer

Immunity	
EU	CE Marking 89/336/EEC EN55024 EN61000-4-2 EN61000-4-3 EN61000-4-4 EN61000-4-5 EN61000-4-6 EN61000-4-8 EN61000-4-11

18.2 Regulatory Summary for the SpinStor RAID and SpinStor JBOD

The regulatory summary for the SpinStor RAID and SpinStor JBOD is listed in following table:

Table 18-2. Regulatory Summary for the SpinStor

Safety	
USA	TUV-US Certified UL1950
Canada	C-TUV Certified CAN/CSA-C22.2 No. 950
EU	CE Marking 73/23/EEC EN60950
Emissions	
USA	FCC CFR47 Part 15 Class A
Canada	ICES-003 Class A
EU	CE Marking 89/336/EEC EN55022 Class A EN61000-3-2 EN61000-3-3

Table 18-2. Regulatory Summary for the SpinStor

Immunity	
EU	CE Marking 89/336/EEC EN55024 EN61000-4-2 EN61000-4-3 EN61000-4-4 EN61000-4-5 EN61000-4-6 EN61000-4-11

18.3 EU Declarations of Conformity

Declarations of conformity are given below for the SpinServer and the SpinStor.

SpinServer EU Declaration of Conformity

The SpinServer EU declaration of conformity is listed in the following table.

Table 18-3. SpinServer EU Declaration of Conformity

Declaration of Conformity	
Application of Council Directives	73/23/EEC Low Voltage Directive 89/336/EEC Electromagnetic Compatibility Directive
Standards to Which Conformity is Declared	EN60950 EN55022 Class A EN61000-3-2 EN61000-3-3 EN55024 EN61000-4-2 EN61000-4-3 EN61000-4-4 EN61000-4-5 EN61000-4-6 EN61000-4-8 EN61000-4-11
Manufacturer's Name and Address	Spinnaker Networks, LLC 301 Alpha Drive Pittsburgh, PA, USA 15238-2907
Type of Equipment	Server (Information Technology Equipment)

Table 18-3. SpinServer EU Declaration of Conformity

Declaration of Conformity	
Model Information	SpinServer 3300 Model 200 Part Number 2106-0005-01
Year Of Manufacture	2002 and later
The undersigned hereby declares that the above named equipment conforms to the above Directives and Standards.	
Date	August 16, 2002
Location	Pittsburgh, PA, USA
Name	Ben Speiser
Signature	Signature on file
Title	Vice President of Hardware Engineering

SpinStor EU Declarations of Conformity

The SpinStor EU declarations of conformity are listed in the following tables. Information is given about the following:

- SpinStor RAID-146 and JBOD-146
- SpinStor RAID-73 and JBOD-73

Table 18-4. SpinStor RAID-146 and JBOD-146 EU Declaration of Conformity

Declaration of Conformity	
Application of Council Directives	73/23/EEC Low Voltage Directive 89/336/EEC Electromagnetic Compatibility Directive
Standards to Which Conformity is Declared	EN60950 EN55022 Class A EN61000-3-2 EN61000-3-3 EN55024 EN61000-4-2 EN61000-4-3 EN61000-4-4 EN61000-4-5 EN61000-4-6 EN61000-4-11

Table 18-4. SpinStor RAID-146 and JBOD-146 EU Declaration of Conformity

Declaration of Conformity	
Manufacturer's Name and Address	Spinnaker Networks, LLC 301 Alpha Drive Pittsburgh, PA, USA 15238-2907
Type of Equipment	Storage System (Information Technology Equipment)
Model Information **(146 GB Disk Drives)**	SpinStor JBOD-146: Part Number 2104-0003-04 SpinStor RAID-146: Part Number 2104-0004-04
Year Of Manufacture	2002 and later
The undersigned hereby declares that the above named equipment conforms to the above Directives and Standards.	
Date	November 6, 2002
Location	Pittsburgh, PA, USA
Name	Ben Speiser
Signature	Signature on file
Title	Vice President of Hardware Engineering

Table 18-5. SpinStor RAID-73 and JBOD-73 EU Declaration of Conformity

Declaration of Conformity	
Application of Council Directives	73/23/EEC Low Voltage Directive 89/336/EEC Electromagnetic Compatibility Directive
Standards to Which Conformity is Declared	EN60950 EN55022 Class A EN61000-3-2 EN61000-3-3 EN55024 EN61000-4-2 EN61000-4-3 EN61000-4-4 EN61000-4-5 EN61000-4-6 EN61000-4-11
Manufacturer's Name and Address	Spinnaker Networks, LLC 301 Alpha Drive Pittsburgh, PA, USA 15238-2907

Table 18-5. SpinStor RAID-73 and JBOD-73 EU Declaration of Conformity

Declaration of Conformity	
Type of Equipment	Storage System (Information Technology Equipment)
Model Information **(73 GB Disk Drives)**	SpinStor JBOD-73: Part Number 2104-0003-03 SpinStor RAID-73: Part Number 2104-0004-03
Year Of Manufacture	2002 and later
The undersigned hereby declares that the above named equipment conforms to the above Directives and Standards.	
Date	January 17, 2003
Location	Pittsburgh, PA, USA
Name	Ben Speiser
Signature	Signature on file
Title	Vice President of Hardware Engineering

18.4 Emissions Statements for the SpinServer and the SpinStor

The FCC Class A and the ICES-003 Class A emissions statements are given below.

FCC Class A

This device complies with Part 15 of the FCC Rules. Operation is subject to the following two conditions:

1. This device may not cause harmful interference.

2. This device must accept any interference received, including interference that may cause undesired operation.

Note: This equipment has been tested and found to comply with the limits for a Class A digital device, pursuant to part 15 of the FCC Rules. These limits are designed to provide reasonable protection against harmful interference when the equipment is operated in a commercial environment. This equipment generates, uses, and can radiate radio frequency energy and, if not installed and used in accordance with the instruction manual, may cause harmful interference to radio communications. Operation of this equipment in a residential area is likely to cause harmful interference in which case the user will be required to correct the interference at his own expense.

Note: Any changes or modifications to this equipment not expressly approved by Spinnaker Networks, LLC, may void the user's FCC granted authority to operate the equipment.

ICES-003 Class A

This Class A digital apparatus complies with Canadian ICES-003.

Cet appareil numérique de la classe A est conforme à la norme NMB-003 du Canada.

18.5 Class 1 Laser Statement for the SpinServer and the SpinStor

Warning: CLASS 1 LASER PRODUCT

Warnung: LASER KLASSE 1 PRODUKT

Warning: Lasers emit invisible radiation from the aperture opening when no fiber-optic cable is connected. When removing cables do not stare into the open apertures. In addition, install protective aperture covers to fiber ports with no cable connected.

Warnung: Laser strahlen unsichtbare Strahlung von der Blendonöffnung Öffnung aus, wenn kein Glasfaserkabel angeschlossen wird. Wenn Sie Kabel löschen, starren Sie nicht in die geöffneten Blendenöffnungen an. Zusätzlich installieren Sie schützende Blendenöffnung Abdeckungen zu den Faserkanälen ohne das angeschlossene Kabel.

19.0 Appendix C: Third Party License

The following licenses apply to third-party software that is included in this product.

19.1 Apache Software License

The Apache Software License, Version 1.1

Copyright (C) 1999-2000 The Apache Software Foundation. All rights reserved.

Redistribution and use in source and binary forms, with or without modification, are permitted provided that the following conditions are met:

1. Redistributions of source code must retain the above copyright notice, this list of conditions and the following disclaimer.

2. Redistributions in binary form must reproduce the above copyright notice, this list of conditions and the following disclaimer in the documentation and/or other materials provided with the distribution.

3. The end-user documentation included with the redistribution, if any, must include the following acknowledgment: "This product includes software developed by the Apache Software Foundation (http://www.apache.org/)." Alternately, this acknowledgment may appear in the software itself, if and wherever such third-party acknowledgments normally appear.

4. The names "Cocoon", "The Jakarta Project", "Jakarta-Regexp", and "Apache Software Foundation" must not be used to endorse or promote products derived from this software without prior written permission. For written permission, please contact apache@apache.org.

5. Products derived from this software may not be called "Apache", nor may "Apache" appear in their name, without prior written permission of the Apache Software Foundation.

THIS SOFTWARE IS PROVIDED “AS IS” AND ANY EXPRESSED OR IMPLIED WARRANTIES, INCLUDING, BUT NOT LIMITED TO, THE IMPLIED WARRANTIES OF MERCHANTABILITY AND FITNESS FOR A PARTICULAR PURPOSE ARE DISCLAIMED. IN NO EVENT SHALL THE APACHE SOFTWARE FOUNDATION OR ITS CONTRIBUTORS BE LIABLE FOR ANY DIRECT, INDIRECT, INCIDENTAL, SPECIAL, EXEMPLARY, OR CONSEQUENTIAL DAMAGES (INCLUDING, BUT NOT LIMITED TO, PROCUREMENT OF SUBSTITUTE GOODS OR SERVICES; LOSS OF USE, DATA, OR PROFITS; OR BUSINESS INTERRUPTION) HOWEVER CAUSED AND ON ANY THEORY OF LIABILITY, WHETHER IN CONTRACT, STRICT LIABILITY, OR TORT (INCLUDING NEGLIGENCE OR OTHERWISE) ARISING IN ANY WAY OUT OF THE USE OF THIS SOFTWARE, EVEN IF ADVISED OF THE POSSIBILITY OF SUCH DAMAGE.

This software consists of voluntary contributions made by many individuals on behalf of the Apache Software Foundation. For more information on the Apache Software Foundation, please see <http://www.apache.org/>.

Portions of this software are based upon public domain software originally written at the National Center for Supercomputing Applications, University of Illinois, Urbana-Champaign.

19.2 Kerberos Software License

Kerberos
Copyright (C) 1985-2001 by the Massachusetts Institute of Technology.

All rights reserved.

Export of this software from the United States of America may require a specific license from the United States Government. It is the responsibility of any person or organization contemplating export to obtain such a license before exporting.

WITHIN THAT CONSTRAINT, permission to use, copy, modify, and distribute this software and its documentation for any purpose and without fee is hereby granted, provided that the above copyright notice appear in all copies and that both that copyright notice and this permission notice appear in supporting documentation, and that the name of M.I.T. not be used in advertising or publicity pertaining to distribution of the software without specific, written prior permission. Furthermore if you modify this software you must label your software as modified software and not distribute it in such a fashion that it might be confused with the original MIT software. M.I.T. makes no representations about the suitability of this software for any purpose. It is provided "as is" without express or implied warranty.

THIS SOFTWARE IS PROVIDED “AS IS” AND WITHOUT ANY EXPRESS OR IMPLIED WARRANTIES, INCLUDING, WITHOUT LIMITATION, THE IMPLIED WARRANTIES OF MERCHANTIBILITY AND FITNESS FOR A PARTICULAR PURPOSE.

Individual source code files are copyright MIT, Cygnus Support, OpenVision, Oracle, Sun Soft, FundsXpress, and others.

Project Athena, Athena, Athena MUSE, Discuss, Hesiod, Kerberos, Moira, and Zephyr are trademarks of the Massachusetts Institute of Technology (MIT). No commercial use of these trademarks may be made without prior written permission of MIT.

"Commercial use" means use of a name in a product or other for-profit manner. It does NOT prevent a commercial firm from referring to the MIT trademarks in order to convey information (although in doing so, recognition of their trademark status should be given).

19.3 Kerberos V5 License

Kerberos V5 includes documentation and software developed at the University of California at Berkeley, which includes this copyright notice:

Copyright (C) 1983 Regents of the University of California.
All rights reserved.

Redistribution and use in source and binary forms, with or without modification, are permitted provided that the following conditions are met:

1. Redistributions of source code must retain the above copyright notice, this list of conditions and the following disclaimer.

2. Redistributions in binary form must reproduce the above copyright notice, this list of conditions and the following disclaimer in the documentation and/or other materials provided with the distribution.

3. All advertising materials mentioning features or use of this software must display the following acknowledgement:

This product includes software developed by the University of California, Berkeley and its contributors.

4. Neither the name of the University nor the names of its contributors may be used to endorse or promote products derived from this software without specific prior written permission.

19.4 The OpenLDAP Public License

Version 2.7, 7 September 2001

Redistribution and use of this software and associated documentation ("Software"), with or without modification, are permitted provided that the following conditions are met:

1. Redistributions of source code must retain copyright statements and notices,

2. Redistributions in binary form must reproduce applicable copyright statements and notices, this list of conditions, and the following disclaimer in the documentation and/or other materials provided with the distribution, and

3. Redistributions must contain a verbatim copy of this document.

The OpenLDAP Foundation may revise this license from time to time. Each revision is distinguished by a version number. You may use this Software under terms of this license revision or under the terms of any subsequent revision of the license.

THIS SOFTWARE IS PROVIDED BY THE OPENLDAP FOUNDATION AND ITS CONTRIBUTORS “AS IS” AND ANY EXPRESSED OR IMPLIED WARRANTIES, INCLUDING, BUT NOT LIMITED TO, THE IMPLIED WARRANTIES OF MERCHANTABILITY AND FITNESS FOR A PARTICULAR PURPOSE ARE DISCLAIMED. IN NO EVENT SHALL THE OPENLDAP FOUNDATION, ITS CONTRIBUTORS, OR THE AUTHOR(S) OR OWNER(S) OF THE SOFTWARE BE LIABLE FOR ANY DIRECT, INDIRECT, INCIDENTAL, SPECIAL, EXEMPLARY, OR CONSEQUENTIAL DAMAGES (INCLUDING, BUT NOT LIMITED TO, PROCUREMENT OF SUBSTITUTE GOODS OR SERVICES; LOSS OF USE, DATA, OR PROFITS; OR BUSINESS INTERRUPTION) HOWEVER CAUSED AND ON ANY THEORY OF LIABILITY, WHETHER IN CONTRACT, STRICT LIABILITY, OR TORT (INCLUDING NEGLIGENCE OR OTHERWISE) ARISING IN ANY WAY OUT OF THE USE OF THIS SOFTWARE, EVEN IF ADVISED OF THE POSSIBILITY OF SUCH DAMAGE.

The names of the authors and copyright holders must not be used in advertising or otherwise to promote the sale, use or other dealing in this Software without specific, written prior permission. Title to copyright in this Software shall at all times remain with copyright holders.

OpenLDAP is a registered trademark of the OpenLDAP Foundation.

Copyright 1999-2001 The OpenLDAP Foundation, Redwood City, California, USA. All Rights Reserved. Permission to copy and distribute verbatim copies of this document is granted.

19.5 Westhawk SNMP License

Westhawk SNMP
Copyright (C) 2000, 2001 by Westhawk Ltd
www.westhawk.co.uk

Permission to use, copy, modify, and distribute this software for any purpose and without fee is hereby granted, provided that the above copyright notices appear in all copies and that both the copyright notice and this permission notice appear in supporting documentation.

This software is provided “as is” without express or implied warranty.

Author: Tim Panton (thp@westhawk.co.uk)

19.6 Net-SNMP License

Various copyrights apply to this package, listed in 4 separate parts below. Please make sure that you read all the parts. Up until 2001, the project was based at UC Davis, and the first part covers all code written during this time. From 2001 onwards, the project has been based at SourceForge, and Networks Associates Technology, Inc hold the copyright on behalf of the wider Net-SNMP community, covering all derivative work done since then. An additional copyright section has been added as Part 3 below also under a BSD license for the work contributed by Cambridge Broadband Ltd. to the project since 2001. An additional copyright section has been added as Part 4 below also under a BSD license for the work contributed by Sun Microsystems, Inc. to the project since 2003.

Code has been contributed to this project by many people over the years it has been in development, and a full list of contributors can be found in the README file under the THANKS section.

Part 1: CMU/UCD copyright notice: (BSD like)

Copyright 1989, 1991, 1992 by Carnegie Mellon University

Derivative Work - 1996, 1998-2000 Copyright 1996, 1998-2000 The Regents of the University of California

All Rights Reserved

Permission to use, copy, modify and distribute this software and its documentation for any purpose and without fee is hereby granted, provided that the above copyright notice appears in all copies and that both that copyright notice and this permission notice appear in supporting documentation, and that the name of CMU and The Regents of the University of California not be used in advertising or publicity pertaining to distribution of the software without specific written permission.

CMU AND THE REGENTS OF THE UNIVERSITY OF CALIFORNIA DISCLAIM ALL WARRANTIES WITH REGARD TO THIS SOFTWARE, INCLUDING ALL IMPLIED WARRANTIES OF MERCHANTABILITY AND FITNESS. IN NO EVENT SHALL CMU OR THE REGENTS OF THE UNIVERSITY OF CALIFORNIA BE LIABLE FOR ANY SPECIAL, INDIRECT OR CONSEQUENTIAL DAMAGES OR ANY DAMAGES WHATSOEVER RESULTING FROM THE LOSS OF USE, DATA OR PROFITS, WHETHER IN AN ACTION OF CONTRACT, NEGLIGENCE OR OTHER TORTIOUS ACTION, ARISING OUT OF OR IN CONNECTION WITH THE USE OR PERFORMANCE OF THIS SOFTWARE.

Part 2: Networks Associates Technology, Inc copyright notice (BSD)

Copyright (c) 2001-2003, Networks Associates Technology, Inc All rights reserved.

Redistribution and use in source and binary forms, with or without modification, are permitted provided that the following conditions are met:

- Redistributions of source code must retain the above copyright notice, this list of conditions and the following disclaimer.
- Redistributions in binary form must reproduce the above copyright notice, this list of conditions and the following disclaimer in the documentation and/or other materials provided with the distribution.
- Neither the name of the Networks Associates Technology, Inc nor the names of its contributors may be used to endorse or promote products derived from this software without specific prior written permission.

THIS SOFTWARE IS PROVIDED BY THE COPYRIGHT HOLDERS AND CONTRIBUTORS “AS IS” AND ANY EXPRESS OR IMPLIED WARRANTIES, INCLUDING, BUT NOT LIMITED TO, THE IMPLIED WARRANTIES OF MERCHANTABILITY AND FITNESS FOR A PARTICULAR PURPOSE ARE DISCLAIMED. IN NO EVENT SHALL THE COPYRIGHT HOLDERS OR CONTRIBUTORS BE LIABLE FOR ANY DIRECT, INDIRECT, INCIDENTAL, SPECIAL, EXEMPLARY, OR CONSEQUENTIAL DAMAGES (INCLUDING, BUT NOT LIMITED TO, PROCUREMENT OF SUBSTITUTE GOODS OR SERVICES; LOSS OF USE, DATA, OR PROFITS; OR BUSINESS INTERRUPTION) HOWEVER CAUSED AND ON ANY THEORY OF LIABILITY, WHETHER IN CONTRACT, STRICT LIABILITY, OR TORT (INCLUDING NEGLIGENCE OR OTHERWISE) ARISING IN ANY WAY OUT OF THE USE OF THIS SOFTWARE, EVEN IF ADVISED OF THE POSSIBILITY OF SUCH DAMAGE.

Part 3: Cambridge Broadband Ltd. copyright notice (BSD)

Portions of this code are copyright (c) 2001-2003, Cambridge Broadband Ltd. All rights reserved.

Redistribution and use in source and binary forms, with or without modification, are permitted provided that the following conditions are met:

- Redistributions of source code must retain the above copyright notice, this list of

conditions and the following disclaimer.

- Redistributions in binary form must reproduce the above copyright notice, this list of conditions and the following disclaimer in the documentation and/or other materials provided with the distribution.
- The name of Cambridge Broadband Ltd. may not be used to endorse or promote products derived from this software without specific prior written permission.

THIS SOFTWARE IS PROVIDED BY THE COPYRIGHT HOLDER "AS IS" AND ANY EXPRESS OR IMPLIED WARRANTIES, INCLUDING, BUT NOT LIMITED TO, THE IMPLIED WARRANTIES OF MERCHANTABILITY AND FITNESS FOR A PARTICULAR PURPOSE ARE DISCLAIMED. IN NO EVENT SHALL THE COPYRIGHT HOLDER BE LIABLE FOR ANY DIRECT, INDIRECT, INCIDENTAL, SPECIAL, EXEMPLARY, OR CONSEQUENTIAL DAMAGES (INCLUDING, BUT NOT LIMITED TO, PROCUREMENT OF SUBSTITUTE GOODS OR SERVICES; LOSS OF USE, DATA, OR PROFITS; OR BUSINESS INTERRUPTION) HOWEVER CAUSED AND ON ANY THEORY OF LIABILITY, WHETHER IN CONTRACT, STRICT LIABILITY, OR TORT (INCLUDING NEGLIGENCE OR OTHERWISE) ARISING IN ANY WAY OUT OF THE USE OF THIS SOFTWARE, EVEN IF ADVISED OF THE POSSIBILITY OF SUCH DAMAGE.

Part 4: Sun Microsystems, Inc. copyright notice (BSD)

Copyright © 2003 Sun Microsystems, Inc., 4150 Network Circle, Santa Clara, California 95054, U.S.A. All rights reserved.

Use is subject to license terms below.

This distribution may include materials developed by third parties.

Sun, Sun Microsystems, the Sun logo and Solaris are trademarks or registered trademarks of Sun Microsystems, Inc. in the U.S. and other countries.

Redistribution and use in source and binary forms, with or without modification, are permitted provided that the following conditions are met:

- Redistributions of source code must retain the above copyright notice, this list of conditions and the following disclaimer.
- Redistributions in binary form must reproduce the above copyright notice, this list of conditions and the following disclaimer in the documentation and/or other materials provided with the distribution.
- Neither the name of the Sun Microsystems, Inc. nor the names of its contributors may be used to endorse or promote products derived from this software without specific prior written permission.

THIS SOFTWARE IS PROVIDED BY THE COPYRIGHT HOLDERS AND CONTRIBUTORS “AS IS” AND ANY EXPRESS OR IMPLIED WARRANTIES, INCLUDING, BUT NOT LIMITED TO, THE IMPLIED WARRANTIES OF MERCHANTABILITY AND FITNESS FOR A PARTICULAR PURPOSE ARE DISCLAIMED. IN NO EVENT SHALL THE COPYRIGHT HOLDERS OR CONTRIBUTORS BE LIABLE FOR ANY DIRECT, INDIRECT, INCIDENTAL, SPECIAL, EXEMPLARY, OR CONSEQUENTIAL DAMAGES (INCLUDING, BUT NOT LIMITED TO, PROCUREMENT OF SUBSTITUTE GOODS OR SERVICES; LOSS OF USE, DATA, OR PROFITS; OR BUSINESS INTERRUPTION) HOWEVER CAUSED AND ON ANY THEORY OF LIABILITY, WHETHER IN CONTRACT, STRICT LIABILITY, OR TORT (INCLUDING NEGLIGENCE OR OTHERWISE) ARISING IN ANY WAY OUT OF THE USE OF THIS SOFTWARE, EVEN IF ADVISED OF THE POSSIBILITY OF SUCH DAMAGE.

19.7 GNU Lesser General Public License

GNU LESSER GENERAL PUBLIC LICENSE
Version 2.1, February 1999

Copyright (C) 1991, 1999 Free Software Foundation, Inc.
59 Temple Place, Suite 330, Boston, MA 02111-1307 USA

Everyone is permitted to copy and distribute verbatim copies of this license document, but changing it is not allowed.

[This is the first released version of the Lesser GPL. It also counts as the successor of the GNU Library Public License, version 2, hence the version number 2.1.]

Preamble

The licenses for most software are designed to take away your freedom to share and change it. By contrast, the GNU General Public Licenses are intended to guarantee your freedom to share and change free software--to make sure the software is free for all its users.

This license, the Lesser General Public License, applies to some specially designated software packages--typically libraries--of the Free Software Foundation and other authors who decide to use it. You can use it too, but we suggest you first think carefully about whether this license or the ordinary General Public License is the better strategy to use in any particular case, based on the explanations below.

When we speak of free software, we are referring to freedom of use, not price. Our General Public Licenses are designed to make sure that you have the freedom to distribute copies of free software (and charge for this service if you wish); that you receive source code or can get it if you want it; that you can change the software and use pieces of it in new free programs; and that you are informed that you can do these things.

To protect your rights, we need to make restrictions that forbid distributors to deny you these rights or to ask you to surrender these rights. These restrictions translate to certain responsibilities for you if you distribute copies of the library or if you modify it.

For example, if you distribute copies of the library, whether gratis or for a fee, you must give the recipients all the rights that we gave you. You must make sure that they, too, receive or can get the source code. If you link other code with the library, you must provide complete object files to the recipients, so that they can relink them with the library after making changes to the library and recompiling it. And you must show them these terms so they know their rights.

We protect your rights with a two-step method: (1) we copyright the library, and (2) we offer you this license, which gives you legal permission to copy, distribute and/or modify the library.

To protect each distributor, we want to make it very clear that there is no warranty for the free library. Also, if the library is modified by someone else and passed on, the recipients should know that what they have is not the original version, so that the original author's reputation will not be affected by problems that might be introduced by others.

Finally, software patents pose a constant threat to the existence of any free program. We wish to make sure that a company cannot effectively restrict the users of a free program by obtaining a restrictive license from a patent holder. Therefore, we insist that any patent license obtained for a version of the library must be consistent with the full freedom of use specified in this license.

Most GNU software, including some libraries, is covered by the ordinary GNU General Public License. This license, the GNU Lesser General Public License, applies to certain designated libraries, and is quite different from the ordinary General Public License. We use this license for certain libraries in order to permit linking those libraries into non-free programs.

When a program is linked with a library, whether statically or using a shared library, the combination of the two is legally speaking a combined work, a derivative of the original library. The ordinary General Public License therefore permits such linking only if the entire combination fits its criteria of freedom. The Lesser General Public License permits more lax criteria for linking other code with the library.

We call this license the "Lesser" General Public License because it does Less to protect the user's freedom than the ordinary General Public License. It also provides other free software developers Less of an advantage over competing non-free programs. These disadvantages are the reason we use the ordinary General Public License for many libraries. However, the Lesser license provides advantages in certain special circumstances.

For example, on rare occasions, there may be a special need to encourage the widest possible use of a certain library, so that it becomes a de-facto standard. To achieve this, non-free programs must be allowed to use the library. A more frequent case is that a free library does the same job as widely used non-free libraries. In this case, there is little to gain by limiting the free library to free software only, so we use the Lesser General Public License.

In other cases, permission to use a particular library in non-free programs enables a greater number of people to use a large body of free software. For example, permission to use the GNU C Library in non-free programs enables many more people to use the whole GNU operating system, as well as its variant, the GNU/Linux operating system.

Although the Lesser General Public License is Less protective of the users' freedom, it does ensure that the user of a program that is linked with the Library has the freedom and the wherewithal to run that program using a modified version of the Library.

The precise terms and conditions for copying, distribution and modification follow. Pay close attention to the difference between a "work based on the library" and a "work that uses the library". The former contains code derived from the library, whereas the latter must be combined with the library in order to run.

GNU LESSER GENERAL PUBLIC LICENSE
TERMS AND CONDITIONS FOR COPYING, DISTRIBUTION AND MODIFICATION

0. This License Agreement applies to any software library or other program which contains a notice placed by the copyright holder or other authorized party saying it may be distributed under the terms of this Lesser General Public License (also called "this License"). Each licensee is addressed as "you".

A "library" means a collection of software functions and/or data prepared so as to be conveniently linked with application programs (which use some of those functions and data) to form executables.

The "Library", below, refers to any such software library or work which has been distributed under these terms. A "work based on the Library" means either the Library or any derivative work under copyright law: that is to say, a work containing the Library or a portion of it, either verbatim or with modifications and/or translated straightforwardly into another language. (Hereinafter, translation is included without limitation in the term "modification".)

"Source code" for a work means the preferred form of the work for making modifications to it. For a library, complete source code means all the source code for all modules it contains, plus any associated interface definition files, plus the scripts used to control compilation and installation of the library.

Activities other than copying, distribution and modification are not covered by this License; they are outside its scope. The act of running a program using the Library is not restricted, and output from such a program is covered only if its contents constitute a work based on the Library (independent of the use of the Library in a tool for writing it). Whether that is true depends on what the Library does and what the program that uses the Library does.

1. You may copy and distribute verbatim copies of the Library's complete source code as you receive it, in any medium, provided that you conspicuously and appropriately publish on each copy an appropriate copyright notice and disclaimer of warranty; keep intact all the notices that refer to this License and to the absence of any warranty; and distribute a copy of this License along with the Library.

You may charge a fee for the physical act of transferring a copy, and you may at your option offer warranty protection in exchange for a fee.

2. You may modify your copy or copies of the Library or any portion of it, thus forming a work based on the Library, and copy and distribute such modifications or work under the terms of Section 1 above, provided that you also meet all of these conditions:

a) The modified work must itself be a software library.

b) You must cause the files modified to carry prominent notices stating that you changed the files and the date of any change.

c) You must cause the whole of the work to be licensed at no charge to all third parties under the terms of this License.

d) If a facility in the modified Library refers to a function or a table of data to be supplied by an application program that uses the facility, other than as an argument passed when the facility is invoked, then you must make a good faith effort to ensure that, in the event an application does not supply such function or table, the facility still operates, and performs whatever part of its purpose remains meaningful.

(For example, a function in a library to compute square roots has a purpose that is entirely well-defined independent of the application. Therefore, Subsection 2d requires that any application-supplied function or table used by this function must be optional: if the application does not supply it, the square root function must still compute square roots.)

These requirements apply to the modified work as a whole. If identifiable sections of that work are not derived from the Library, and can be reasonably considered independent and separate works in themselves, then this License, and its terms, do not apply to those sections when you distribute them as separate works. But when you distribute the same sections as part of a whole which is a work based on the Library, the distribution of the whole must be on the terms of this License, whose permissions for other licensees extend to the entire whole, and thus to each and every part regardless of who wrote it.

Thus, it is not the intent of this section to claim rights or contest your rights to work written entirely by you; rather, the intent is to exercise the right to control the distribution of derivative or collective works based on the Library.

In addition, mere aggregation of another work not based on the Library with the Library (or with a work based on the Library) on a volume of a storage or distribution medium does not bring the other work under the scope of this License.

3. You may opt to apply the terms of the ordinary GNU General Public License instead of this License to a given copy of the Library. To do this, you must alter all the notices that refer to this License, so that they refer to the ordinary GNU General Public License, version 2, instead of to this License. (If a newer version than version 2 of the ordinary GNU General Public License has appeared, then you can specify that version instead if you wish.) Do not make any other change in these notices.

Once this change is made in a given copy, it is irreversible for that copy, so the ordinary GNU General Public License applies to all subsequent copies and derivative works made from that copy.

This option is useful when you wish to copy part of the code of the Library into a program that is not a library.

4. You may copy and distribute the Library (or a portion or derivative of it, under Section 2) in object code or executable form under the terms of Sections 1 and 2 above provided that you accompany it with the complete corresponding machine-readable source code, which must be distributed under the terms of Sections 1 and 2 above on a medium customarily used for software interchange.

If distribution of object code is made by offering access to copy from a designated place, then offering equivalent access to copy the source code from the same place satisfies the requirement to distribute the source code, even though third parties are not compelled to copy the source along with the object code.

5. A program that contains no derivative of any portion of the Library, but is designed to work with the Library by being compiled or linked with it, is called a "work that uses the Library". Such a work, in isolation, is not a derivative work of the Library, and therefore falls outside the scope of this License.

However, linking a "work that uses the Library" with the Library creates an executable that is a derivative of the Library (because it contains portions of the Library), rather than a "work that uses the library". The executable is therefore covered by this License. Section 6 states terms for distribution of such executables.

When a "work that uses the Library" uses material from a header file that is part of the Library, the object code for the work may be a derivative work of the Library even though the source code is not. Whether this is true is especially significant if the work can be linked without the Library, or if the work is itself a library. The threshold for this to be true is not precisely defined by law.

If such an object file uses only numerical parameters, data structure layouts and accessors, and small macros and small inline functions (ten lines or less in length), then the use of the object file is unrestricted, regardless of whether it is legally a derivative work. (Executables containing this object code plus portions of the Library will still fall under Section 6.)

Otherwise, if the work is a derivative of the Library, you may distribute the object code for the work under the terms of Section 6. Any executables containing that work also fall under Section 6, whether or not they are linked directly with the Library itself.

6. As an exception to the Sections above, you may also combine or link a "work that uses the Library" with the Library to produce a work containing portions of the Library, and distribute that work under terms of your choice, provided that the terms permit modification of the work for the customer's own use and reverse engineering for debugging such modifications.

You must give prominent notice with each copy of the work that the Library is used in it and that the Library and its use are covered by this License. You must supply a copy of this License. If the work during execution displays copyright notices, you must include the copyright notice for the Library among them, as well as a reference directing the user to the copy of this License. Also, you must do one of these things:

a) Accompany the work with the complete corresponding machine-readable source code for the Library including whatever changes were used in the work (which must be distributed under Sections 1 and 2 above); and, if the work is an executable linked with the Library, with the complete machine-readable "work that uses the Library", as object code and/or source code, so that the user can modify the Library and then relink to produce a modified executable containing the modified Library. (It is understood that the user who changes the contents of definitions files in the Library will not necessarily be able to recompile the application to use the modified definitions.)

b) Use a suitable shared library mechanism for linking with the Library. A suitable mechanism is one that (1) uses at run time a copy of the library already present on the user's computer system, rather than copying library functions into the executable, and (2) will operate properly with a modified version of the library, if the user installs one, as long as the modified version is interface-compatible with the version that the work was made with.

c) Accompany the work with a written offer, valid for at least three years, to give the same user the materials specified in Subsection 6a, above, for a charge no more than the cost of performing this distribution.

d) If distribution of the work is made by offering access to copy from a designated place, offer equivalent access to copy the above specified materials from the same place.

e) Verify that the user has already received a copy of these materials or that you have already sent this user a copy.

For an executable, the required form of the "work that uses the Library" must include any data and utility programs needed for reproducing the executable from it. However, as a special exception, the materials to be distributed need not include anything that is normally distributed (in either source or binary form) with the major components (compiler, kernel, and so on) of the operating system on which the executable runs, unless that component itself accompanies the executable.

It may happen that this requirement contradicts the license restrictions of other proprietary libraries that do not normally accompany the operating system. Such a contradiction means you cannot use both them and the Library together in an executable that you distribute.

7. You may place library facilities that are a work based on the Library side-by-side in a single library together with other library facilities not covered by this License, and distribute such a combined library, provided that the separate distribution of the work based on the Library and of the other library facilities is otherwise permitted, and provided that you do these two things:

a) Accompany the combined library with a copy of the same work based on the Library, uncombined with any other library facilities. This must be distributed under the terms of the Sections above.

b) Give prominent notice with the combined library of the fact that part of it is a work based on the Library, and explaining where to find the accompanying uncombined form of the same work.

8. You may not copy, modify, sublicense, link with, or distribute the Library except as expressly provided under this License. Any attempt otherwise to copy, modify, sublicense, link with, or distribute the Library is void, and will automatically terminate your rights under this License. However, parties who have received copies, or rights, from you under this License will not have their licenses terminated so long as such parties remain in full compliance.

9. You are not required to accept this License, since you have not signed it. However, nothing else grants you permission to modify or distribute the Library or its derivative works. These actions are prohibited by law if you do not accept this License. Therefore, by modifying or distributing the Library (or any work based on the Library), you indicate your acceptance of this License to do so, and all its terms and conditions for copying, distributing or modifying the Library or works based on it.

10. Each time you redistribute the Library (or any work based on the Library), the recipient automatically receives a license from the original licensor to copy, distribute, link with or modify the Library subject to these terms and conditions. You may not impose any further restrictions on the recipients' exercise of the rights granted herein. You are not responsible for enforcing compliance by third parties with this License.

11. If, as a consequence of a court judgment or allegation of patent infringement or for any other reason (not limited to patent issues), conditions are imposed on you (whether by court order, agreement or otherwise) that contradict the conditions of this License, they do not excuse you from the conditions of this License. If you cannot distribute so as to satisfy simultaneously your obligations under this License and any other pertinent obligations, then as a consequence you may not distribute the Library at all. For example, if a patent license would not permit royalty-free redistribution of the Library by all those who receive copies directly or indirectly through you, then the only way you could satisfy both it and this License would be to refrain entirely from distribution of the Library.

If any portion of this section is held invalid or unenforceable under any particular circumstance, the balance of the section is intended to apply, and the section as a whole is intended to apply in other circumstances.

It is not the purpose of this section to induce you to infringe any patents or other property right claims or to contest validity of any such claims; this section has the sole purpose of protecting the integrity of the free software distribution system which is implemented by public license practices. Many people have made generous contributions to the wide range of software distributed through that system in reliance on consistent application of that system; it is up to the author/donor to decide if he or she is willing to distribute software through any other system and a licensee cannot impose that choice.

This section is intended to make thoroughly clear what is believed to be a consequence of the rest of this License.

12. If the distribution and/or use of the Library is restricted in certain countries either by patents or by copyrighted interfaces, the original copyright holder who places the Library under this License may add an explicit geographical distribution limitation excluding those countries, so that distribution is permitted only in or among countries not thus excluded. In such case, this License incorporates the limitation as if written in the body of this License.

13. The Free Software Foundation may publish revised and/or new versions of the Lesser General Public License from time to time. Such new versions will be similar in spirit to the present version, but may differ in detail to address new problems or concerns.

Each version is given a distinguishing version number. If the Library specifies a version number of this License which applies to it and "any later version", you have the option of following the terms and conditions either of that version or of any later version published by the Free Software Foundation. If the Library does not specify a license version number, you may choose any version ever published by the Free Software Foundation.

14. If you wish to incorporate parts of the Library into other free programs whose distribution conditions are incompatible with these, write to the author to ask for permission. For software which is copyrighted by the Free Software Foundation, write to the Free Software Foundation; we sometimes make exceptions for this. Our decision will be guided by the two goals of preserving the free status of all derivatives of our free software and of promoting the sharing and reuse of software generally.

NO WARRANTY

15. BECAUSE THE LIBRARY IS LICENSED FREE OF CHARGE, THERE IS NO WARRANTY FOR THE LIBRARY, TO THE EXTENT PERMITTED BY APPLICABLE LAW. EXCEPT WHEN OTHERWISE STATED IN WRITING THE COPYRIGHT HOLDERS AND/OR OTHER PARTIES PROVIDE THE LIBRARY "AS IS" WITHOUT WARRANTY OF ANY KIND, EITHER EXPRESSED OR IMPLIED, INCLUDING, BUT NOT LIMITED TO, THE IMPLIED WARRANTIES OF MERCHANTABILITY AND FITNESS FOR A PARTICULAR PURPOSE. THE ENTIRE RISK AS TO THE QUALITY AND PERFORMANCE OF THE LIBRARY IS WITH YOU. SHOULD THE LIBRARY PROVE DEFECTIVE, YOU ASSUME THE COST OF ALL NECESSARY SERVICING, REPAIR OR CORRECTION.

16. IN NO EVENT UNLESS REQUIRED BY APPLICABLE LAW OR AGREED TO IN WRITING WILL ANY COPYRIGHT HOLDER, OR ANY OTHER PARTY WHO MAY MODIFY AND/OR REDISTRIBUTE THE LIBRARY AS PERMITTED ABOVE, BE LIABLE TO YOU FOR DAMAGES, INCLUDING ANY GENERAL, SPECIAL, INCIDENTAL OR CONSEQUENTIAL DAMAGES ARISING OUT OF THE USE OR INABILITY TO USE THE LIBRARY (INCLUDING BUT NOT LIMITED TO LOSS OF DATA OR DATA BEING RENDERED INACCURATE OR LOSSES SUSTAINED BY YOU OR THIRD PARTIES OR A FAILURE OF THE LIBRARY TO OPERATE WITH ANY OTHER SOFTWARE), EVEN IF SUCH HOLDER OR OTHER PARTY HAS BEEN ADVISED OF THE POSSIBILITY OF SUCH DAMAGES.

END OF TERMS AND CONDITIONS

How to Apply These Terms to Your New Libraries

If you develop a new library, and you want it to be of the greatest possible use to the public, we recommend making it free software that everyone can redistribute and change. You can do so by permitting redistribution under these terms (or, alternatively, under the terms of the ordinary General Public License).

To apply these terms, attach the following notices to the library. It is safest to attach them to the start of each source file to most effectively convey the exclusion of warranty; and each file should have at least the "copyright" line and a pointer to where the full notice is found.

<one line to give the library's name and a brief idea of what it does.>
Copyright (C) <year> <name of author>

This library is free software; you can redistribute it and/or modify it under the terms of the GNU Lesser General Public License as published by the Free Software Foundation; either version 2.1 of the License, or (at your option) any later version.

This library is distributed in the hope that it will be useful, but WITHOUT ANY WARRANTY; without even the implied warranty of MERCHANTABILITY or FITNESS FOR A PARTICULAR PURPOSE. See the GNU Lesser General Public License for more details.

You should have received a copy of the GNU Lesser General Public License along with this library; if not, write to the Free Software Foundation, Inc., 59 Temple Place, Suite 330, Boston, MA 02111-1307 USA

Also add information on how to contact you by electronic and paper mail.

You should also get your employer (if you work as a programmer) or your school, if any, to sign a "copyright disclaimer" for the library, if necessary. Here is a sample; alter the names:

Yoyodyne, Inc., hereby disclaims all copyright interest in the library `Frob' (a library for tweaking knobs) written by James Random Hacker.

<signature of Ty Coon>, 1 April 1990
Ty Coon, President of Vice

That's all there is to it!

19.8 GNU General Public License

Note: This license applies to the Linux Kernel.

NOTE! This copyright does **not** cover user programs that use kernel services by normal system calls—this is merely considered normal use of the kernel, and does **not** fall under the heading of “derived work”. Also note that the GPL below is copyrighted by the Free Software Foundation, but the instance of code that it refers to (the Linux kernel) is copyrighted by me and others who actually wrote it.

Also note that the only valid version of the GPL as far as the kernel is concerned is *this* particular version of the license (ie v2, not v2.2 or v3.x or whatever), unless explicitly otherwise stated.

Linus Torvalds

GNU GENERAL PUBLIC LICENSE
Version 2, June 1991

Copyright (C) 1989, 1991 Free Software Foundation, Inc. 59 Temple Place, Suite 330, Boston, MA 02111-1307 USA
Everyone is permitted to copy and distribute verbatim copies of this license document, but changing it is not allowed.

Preamble

The licenses for most software are designed to take away your freedom to share and change it. By contrast, the GNU General Public License is intended to guarantee your freedom to share and change free software--to make sure the software is free for all its users. This General Public License applies to most of the Free Software Foundation's software and to any other program whose authors commit to using it. (Some other Free Software Foundation software is covered by the GNU Library General Public License instead.) You can apply it to your programs, too.

When we speak of free software, we are referring to freedom, not price. Our General Public Licenses are designed to make sure that you have the freedom to distribute copies of free software (and charge for this service if you wish), that you receive source code or can get it if you want it, that you can change the software or use pieces of it in new free programs; and that you know you can do these things.

To protect your rights, we need to make restrictions that forbid anyone to deny you these rights or to ask you to surrender the rights. These restrictions translate to certain responsibilities for you if you distribute copies of the software, or if you modify it.

For example, if you distribute copies of such a program, whether gratis or for a fee, you must give the recipients all the rights that you have. You must make sure that they, too, receive or can get the source code. And you must show them these terms so they know their rights.

We protect your rights with two steps: (1) copyright the software, and (2) offer you this license which gives you legal permission to copy, distribute and/or modify the software.

Also, for each author's protection and ours, we want to make certain that everyone understands that there is no warranty for this free software. If the software is modified by someone else and passed on, we want its recipients to know that what they have is not the original, so that any problems introduced by others will not reflect on the original authors' reputations.

Finally, any free program is threatened constantly by software patents. We wish to avoid the danger that redistributors of a free program will individually obtain patent licenses, in effect making the program proprietary. To prevent this, we have made it clear that any patent must be licensed for everyone's free use or not licensed at all.

The precise terms and conditions for copying, distribution and modification follow.

GNU GENERAL PUBLIC LICENSE
TERMS AND CONDITIONS FOR COPYING, DISTRIBUTION AND MODIFICATION

0. This License applies to any program or other work which contains a notice placed by the copyright holder saying it may be distributed under the terms of this General Public License. The “Program”, below, refers to any such program or work, and a “work based on the Program” means either the Program or any derivative work under copyright law: that is to say, a work containing the Program or a portion of it, either verbatim or with modifications and/or translated into another language. (Hereinafter, translation is included without limitation in the term “modification”.) Each licensee is addressed as “you”.

Activities other than copying, distribution and modification are not covered by this License; they are outside its scope. The act of running the Program is not restricted, and the output from the Program is covered only if its contents constitute a work based on the Program (independent of having been made by running the Program). Whether that is true depends on what the Program does.

1. You may copy and distribute verbatim copies of the Program’s source code as you receive it, in any medium, provided that you conspicuously and appropriately publish on each copy an appropriate copyright notice and disclaimer of warranty; keep intact all the notices that refer to this License and to the absence of any warranty; and give any other recipients of the Program a copy of this License along with the Program.

You may charge a fee for the physical act of transferring a copy, and you may at your option offer warranty protection in exchange for a fee.

2. You may modify your copy or copies of the Program or any portion of it, thus forming a work based on the Program, and copy and distribute such modifications or work under the terms of Section 1 above, provided that you also meet all of these conditions:

a) You must cause the modified files to carry prominent notices stating that you changed the files and the date of any change.

b) You must cause any work that you distribute or publish, that in whole or in part contains or is derived from the Program or any part thereof, to be licensed as a whole at no charge to all third parties under the terms of this License.

c) If the modified program normally reads commands interactively when run, you must cause it, when started running for such interactive use in the most ordinary way, to print or display an announcement including an appropriate copyright notice and a notice that there is no warranty (or else, saying that you provide a warranty) and that users may redistribute the program under these conditions, and telling the user how to view a copy of this License. (Exception: if the Program itself is interactive but does not normally print such an announcement, your work based on the Program is not required to print an announcement.)

These requirements apply to the modified work as a whole. If identifiable sections of that work are not derived from the Program, and can be reasonably considered independent and separate works in themselves, then this License, and its terms, do not apply to those sections when you distribute them as separate works. But when you distribute the same sections as part of a whole which is a work based on the Program, the distribution of the whole must be on the terms of this License, whose permissions for other licensees extend to the entire whole, and thus to each and every part regardless of who wrote it.

Thus, it is not the intent of this section to claim rights or contest your rights to work written entirely by you; rather, the intent is to exercise the right to control the distribution of derivative or collective works based on the Program.

In addition, mere aggregation of another work not based on the Program with the Program (or with a work based on the Program) on a volume of a storage or distribution medium does not bring the other work under the scope of this License.

3. You may copy and distribute the Program (or a work based on it, under Section 2) in object code or executable form under the terms of Sections 1 and 2 above provided that you also do one of the following:

a) Accompany it with the complete corresponding machine-readable source code, which must be distributed under the terms of Sections 1 and 2 above on a medium customarily used for software interchange; or,

b) Accompany it with a written offer, valid for at least three years, to give any third party, for a charge no more than your cost of physically performing source distribution, a complete machine-readable copy of the corresponding source code, to be distributed under the terms of Sections 1 and 2 above on a medium customarily used for software interchange; or,

c) Accompany it with the information you received as to the offer to distribute corresponding source code. (This alternative is allowed only for noncommercial distribution and only if you received the program in object code or executable form with such an offer, in accord with Subsection b above.)

The source code for a work means the preferred form of the work for making modifications to it. For an executable work, complete source code means all the source code for all modules it contains, plus any associated interface definition files, plus the scripts used to control compilation and installation of the executable. However, as a special exception, the source code distributed need not include anything that is normally distributed (in either source or binary form) with the major components (compiler, kernel, and so on) of the operating system on which the executable runs, unless that component itself accompanies the executable.

If distribution of executable or object code is made by offering access to copy from a designated place, then offering equivalent access to copy the source code from the same place counts as distribution of the source code, even though third parties are not compelled to copy the source along with the object code.

4. You may not copy, modify, sublicense, or distribute the Program except as expressly provided under this License. Any attempt otherwise to copy, modify, sublicense or distribute the Program is void, and will automatically terminate your rights under this License. However, parties who have received copies, or rights, from you under this License will not have their licenses terminated so long as such parties remain in full compliance.

5. You are not required to accept this License, since you have not signed it. However, nothing else grants you permission to modify or distribute the Program or its derivative works. These actions are prohibited by law if you do not accept this License. Therefore, by modifying or distributing the Program (or any work based on the Program), you indicate your acceptance of this License to do so, and all its terms and conditions for copying, distributing or modifying the Program or works based on it.

6. Each time you redistribute the Program (or any work based on the Program), the recipient automatically receives a license from the original licensor to copy, distribute or modify the Program subject to these terms and conditions. You may not impose any further restrictions on the recipients' exercise of the rights granted herein. You are not responsible for enforcing compliance by third parties to this License.

7. If, as a consequence of a court judgment or allegation of patent infringement or for any other reason (not limited to patent issues), conditions are imposed on you (whether by court order, agreement or otherwise) that contradict the conditions of this License, they do not excuse you from the conditions of this License. If you cannot distribute so as to satisfy simultaneously your obligations under this License and any other pertinent obligations, then as a consequence you may not distribute the Program at all. For example, if a patent license would not permit royalty-free redistribution of the Program by all those who receive copies directly or indirectly through you, then the only way you could satisfy both it and this License would be to refrain entirely from distribution of the Program.

If any portion of this section is held invalid or unenforceable under any particular circumstance, the balance of the section is intended to apply and the section as a whole is intended to apply in other circumstances.

It is not the purpose of this section to induce you to infringe any patents or other property right claims or to contest validity of any such claims; this section has the sole purpose of protecting the integrity of the free software distribution system, which is implemented by public license practices. Many people have made generous contributions to the wide range of software distributed through that system in reliance on consistent application of that system; it is up to the author/donor to decide if he or she is willing to distribute software through any other system and a licensee cannot impose that choice.

This section is intended to make thoroughly clear what is believed to be a consequence of the rest of this License.

8. If the distribution and/or use of the Program is restricted in certain countries either by patents or by copyrighted interfaces, the original copyright holder who places the Program under this License may add an explicit geographical distribution limitation excluding those countries, so that distribution is permitted only in or among countries not thus excluded. In such case, this License incorporates the limitation as if written in the body of this License.

9. The Free Software Foundation may publish revised and/or new versions of the General Public License from time to time. Such new versions will be similar in spirit to the present version, but may differ in detail to address new problems or concerns.

Each version is given a distinguishing version number. If the Program specifies a version number of this License which applies to it and “any later version”, you have the option of following the terms and conditions either of that version or of any later version published by the Free Software Foundation. If the Program does not specify a version number of this License, you may choose any version ever published by the Free Software Foundation.

10. If you wish to incorporate parts of the Program into other free programs whose distribution conditions are different, write to the author to ask for permission. For software which is copyrighted by the Free Software Foundation, write to the Free Software Foundation; we sometimes make exceptions for this. Our decision will be guided by the two goals of preserving the free status of all derivatives of our free software and of promoting the sharing and reuse of software generally.

NO WARRANTY

11. BECAUSE THE PROGRAM IS LICENSED FREE OF CHARGE, THERE IS NO WARRANTY FOR THE PROGRAM, TO THE EXTENT PERMITTED BY APPLICABLE LAW. EXCEPT WHEN OTHERWISE STATED IN WRITING THE COPYRIGHT HOLDERS AND/OR OTHER PARTIES PROVIDE THE PROGRAM “AS IS” WITHOUT WARRANTY OF ANY KIND, EITHER EXPRESSED OR IMPLIED, INCLUDING, BUT NOT LIMITED TO, THE IMPLIED WARRANTIES OF MERCHANTABILITY AND FITNESS FOR A PARTICULAR PURPOSE. THE ENTIRE RISK AS TO THE QUALITY AND PERFORMANCE OF THE PROGRAM IS WITH YOU. SHOULD THE PROGRAM PROVE DEFECTIVE, YOU ASSUME THE COST OF ALL NECESSARY SERVICING, REPAIR OR CORRECTION.

12. IN NO EVENT UNLESS REQUIRED BY APPLICABLE LAW OR AGREED TO IN WRITING WILL ANY COPYRIGHT HOLDER, OR ANY OTHER PARTY WHO MAY MODIFY AND/OR REDISTRIBUTE THE PROGRAM AS PERMITTED ABOVE, BE LIABLE TO YOU FOR DAMAGES, INCLUDING ANY GENERAL, SPECIAL, INCIDENTAL OR CONSEQUENTIAL DAMAGES ARISING OUT OF THE USE OR INABILITY TO USE THE PROGRAM (INCLUDING BUT NOT LIMITED TO LOSS OF DATA OR DATA BEING RENDERED INACCURATE OR LOSSES SUSTAINED BY YOU OR THIRD PARTIES OR A FAILURE OF THE PROGRAM TO OPERATE WITH ANY OTHER PROGRAMS), EVEN IF SUCH HOLDER OR OTHER PARTY HAS BEEN ADVISED OF THE POSSIBILITY OF SUCH DAMAGES.

END OF TERMS AND CONDITIONS

How to Apply These Terms to Your New Programs

If you develop a new program, and you want it to be of the greatest possible use to the public, the best way to achieve this is to make it free software which everyone can redistribute and change under these terms.

To do so, attach the following notices to the program. It is safest to attach them to the start of each source file to most effectively convey the exclusion of warranty; and each file should have at least the “copyright” line and a pointer to where the full notice is found.

<one line to give the program’s name and a brief idea of what it does.>
Copyright (C) <year> <name of author>

> This program is free software; you can redistribute it and/or modify it under the terms of the GNU General Public License as published by the Free Software Foundation; either version 2 of the License, or (at your option) any later version.
>
> This program is distributed in the hope that it will be useful, but WITHOUT ANY WARRANTY; without even the implied warranty of MERCHANTABILITY or FITNESS FOR A PARTICULAR PURPOSE. See the GNU General Public License for more details.
> You should have received a copy of the GNU General Public License along with this program; if not, write to the Free Software Foundation, Inc., 59 Temple Place, Suite 330, Boston, MA 02111-1307 USA

Also add information on how to contact you by electronic and paper mail.

If the program is interactive, make it output a short notice like this when it starts in an interactive mode:

> Gnomovision version 69, Copyright (C) year name of author
> Gnomovision comes with ABSOLUTELY NO WARRANTY; for details type ‘show w’.
> This is free software, and you are welcome to redistribute it under certain conditions; type ‘show c’ for details.

The hypothetical commands ‘show w’ and ‘show c’ should show the appropriate parts of the General Public License. Of course, the commands you use may be called something other than ‘show w’ and ‘show c’; they could even be mouse-clicks or menu items--whatever suits your program.

You should also get your employer (if you work as a programmer) or your school, if any, to sign a “copyright disclaimer” for the program, if necessary. Here is a sample; alter the names:

> Yoyodyne, Inc., hereby disclaims all copyright interest in the program ‘Gnomovision’ (which makes passes at compilers) written by James Hacker.
>
> <signature of Ty Coon>, 1 April 1989 Ty Coon, President of Vice

This General Public License does not permit incorporating your program into proprietary programs. If your program is a subroutine library, you may consider it more useful to permit linking proprietary applications with the library. If this is what you want to do, use the GNU Library General Public License instead of this License.

20.0 Glossary

CIFS - The Common Internet File System is a protocol that defines a standard for client systems to request file services from server systems over a network. CIFS is based on the Standard Server Message Block (SMB) protocol, which is widely used by personal computers and workstations running a vast variety of operating systems.

CIM - The Common Information Model is an object-oriented model that provides a conceptual framework for describing management data.

COM 1 - COM 1 is the name of the leftmost serial communications port on the SpinServer, which is used to access the command line interface of the SpinServer.

COM 2 - COM 2 is the name of the rightmost serial communications port on the SpinServer and is used to attach the SpinServer to the UPS.

DIMM - A Dual In-line Memory Module is a small circuit board that holds memory chips.

CLI - The command line interface is the command version of the SpinServer management interface software.

FC - Fibre Channel is a set of standards, completely developed through industry cooperation, for a serial I/O bus capable of transferring data between two ports at up to 100 MB/second. Fibre Channel supports point-to-point, arbitrated loop, and switched topologies.

Gb - Gigabit is used describe data transfer rates between two entities on a network. In this context, it refers to one billion bits. Network data transfer rates are often measured in gigabits per second (Gbps).

GB - Gigabyte is a unit of measure for data storage on computer systems. One gigabyte (GB) is equal to 1,024 megabytes (MB).

GBICs - Gigabit Interface Converters are transceivers that convert between electrical signals used by host bus adapters (and similar Fibre Channel and Ethernet devices) and either electrical or optical signals suitable for transmission.

GbE - Gigabit Ethernet: A group of Ethernet standards in which data is transmitted at 1 Gb per second.

GUI - The Graphical User Interface is the graphical browser version of the SpinServer management interface software.

HBA - Host Bus Adapter is an I/O adapter that connects a host I/O bus to a computer's memory system.

HTML - Hypertext Markup Language is the authoring language used to create documents that can be displayed on a web browser page.

ICMP - Internet Control Message Protocol is an extension to the Internet Protocol (IP). ICMP supports packets containing error, control, and informational messages.

inode - Inodes are data structures that contain information about files in UNIX file systems. In the file system where each file resides, each file has an inode and is identified by an inode number (i-number). Inodes provide information on files, including user and group ownership, access mode (read, write, or execute permissions) and type. Inodes are created when a file system is created. There are a set number of inodes, which indicates the maximum number of files the system can hold. A file's inode number can be found by using the **`ls -i`** command.

I/O - Input/Output is used to describe any program, operation or device that transfers data between a computer and a peripheral device.

IP - Internet Protocol specifies the format of packets (datagrams) and the addressing scheme. Most networks combine IP with a higher-level protocol, such as TCP or UDP, which establishes a virtual connection between a destination and a source.

JBOD - Just a Bunch of Disks. A storage subsystem using multiple independent disk drives that are not configured according to the RAID system. The expansion disk enclosure in a SpinServer system is a JBOD enclosure.

Kerberos - A network authentication protocol developed at the Massachusetts Institute of Technology. Kerberos uses encryption keys to provide authentication for client/server applications. Authentication provides verification of a user's or process's identity to a server. See also **principal**, **SPN**.

LED - Light emitting diode is an electronic device that lights up when electricity is passed through it.

LSB - Least Significant Bit is the second rotary switch, located at the back of the expansion JBOD, that is used to set disk drive IDs. It has settings of 0 - F.

Mb - Megabit is used to describe a volume of data storage. 1 Mb = 1,024 kilobits (Kb). It is also used to describe data transfer rates on a network. In this context, it refers to one million bits. Networks are often measured in megabits per second (Mbps).

MB - Megabyte is a unit of measure for data storage on computer systems. One megabyte is equal to 1,048,576 (2 to the 20th power) bytes of data.

MHz - Megahertz is the unit of measurement of the speed of microprocessors, called the clock speed. One MHz represents one million cycles per second.

MSB - Most Significant Bit is the first rotary switch, located at the back of the expansion JBOD, that is used to set the base address for the disk drive IDs. It has settings of 0 - 7.

NDMP - Network Data Management Protocol defines a common architecture for the way heterogeneous file servers on a network are backed up. The protocol allows the creation of a common agent used by the central back-up application to back up different file servers running different platforms and platform versions.

NFS - Network File System is a client/server application that allows all network users to access shared files stored on computers of different types.

NICs - Network Interface Cards are expansion boards that enable network connections for a PC or server.

NIS - Network Information Service provides a simple network lookup service consisting of databases and processes. Its purpose is to provide information that needs to be available to the entire network, such as login names, passwords, home directories and group information.

NIS+ - Network Information Service Plus was designed to address security problems that NIS cannot address. (There is no relation between NIS+ and NIS. The commands and the overall structure of NIS+ are different from NIS.) NIS+ increases security by using an additional authentication method. Users have a standard login password, which gives them access to the system, and an additional secure or network password.

NVRAM - Non-Volatile Random Access Memory, a type of memory that retains its contents when the power is turned off.

PDF - Portable Document Format is a file format developed by Adobe Systems that provides an electronic photocopy of a document. PDF captures formatting information from a variety of desktop publishing applications, making it possible to send documents electronically and have them appear on the recipient's monitor, or in printed form, as the writer intended the documents to appear. To view a file in PDF format, you need Adobe Acrobat Reader, a free application distributed by Adobe Systems.

PDU - Power Distribution Units are appliances that provide power connections to system components with high voltage requirements.

Principal - In Kerberos, a principal is a unique identity to which Kerberos can assign tickets. An example Kerberos principal is **susan/admin@SECURITY.EXAMPLE.COM**.

RAID - Redundant Array of Independent Disks is a disk enclosure with RAID controllers. The SpinServer supports RAID levels 0, 1, 3, 5, and 0+1. A RAID set is a group of disks in which the disks independently operate, the data strip size is no smaller than the exported block size, and parity check data is distributed across the array's disks.

SCSI - Small Computer System Interface is a parallel interface standard used by computer systems for attaching peripheral devices, such as disk drives and printers.

SES - The SCSI Enclosure Services manager reports the operational status of disk drives to the RAID controllers.

SP - A Storage Pool is the logical view, as it appears to users, of the compartmentalization of physical storage disks.

SPN - In Kerberos, a Service Principal Name is the name by which a client uniquely identifies an instance of a service.

SSH - Secure Shell is a program used to log into another computer over a network to securely execute commands from a remote machine, and to move files from one machine to another. It was developed by SSH Communications Security Ltd.

TCP - Transmission Control Protocol is a transport protocol. Where the UDP protocol handles only packets, TCP enables two hosts to establish a connection and exchange streams of data. TCP is more reliable than UDP, but slower.

U - One Unit of height in an equipment rack. 1 U = 1.75 inches = 4.45 cm.

UDP - User Datagram Protocol is a connectionless protocol that runs on top of IP networks like TCP. Unlike TCP, UDP provides very few error recovery services, offering instead a direct way to send and receive datagrams over an IP network. It is used primarily for broadcasting messages over a network. UDP is faster than TCP, but less reliable.

UPS - Uninterruptible Power Supply is an appliance that provides power security, with battery power, in the event of a power failure.

VFS - A Virtual File System is the primary unit of data storage in the SpinServer system.

WINS - The Windows Internet Naming Service supports network clients and servers running Windows. WINS uses a distributed database that is automatically updated with the names of computers currently available on a Windows Network and the IP address assigned to each one. The SpinServer has the ability to register its CIFS servers with the WINS servers that are defined in the SpinServer system.