SpinServer® 4100
Field Service Guide

Network Appliance, Inc.
495 East Java Drive
Sunnyvale, CA 94089 USA
Telephone: +1 (408) 822-6000
Fax: +1 (408) 822-4501
Support telephone: +1 (888) 4-NETAPP
Documentation comments: doccomments@netapp.com
Information Web: http://www.netapp.com

Part number 215-00843
April 2004

Copyright and trademark information

Copyright information

Copyright © 2004 Network Appliance, Inc.; copyright © 2002-2004 Spinnaker Networks, LLC. All rights reserved. Specifications subject to change without notice.

No part of this book covered by copyright may be reproduced in any form or by any means—graphic, electronic, or mechanical, including photocopying, recording, taping, or storage in an electronic retrieval system—without prior written permission of the copyright owner.

Network Appliance reserves the right to change any products described herein at any time, and without notice. Network Appliance assumes no responsibility or liability arising from the use of products described herein, except as expressly agreed to in writing by Network Appliance. The use or purchase of this product does not convey a license under any patent rights, trademark rights, or any other intellectual property rights of Network Appliance.

The product described in this manual may be protected by one or more U.S. patents, foreign patents, or pending applications.

RESTRICTED RIGHTS LEGEND: Use, duplication, or disclosure by the government is subject to restrictions as set forth in subparagraph (c)(1)(ii) of the Rights in Technical Data and Computer Software clause at DFARS 252.277-7103 (October 1988) and FAR 52-227-19 (June 1987).

Trademark information

NetApp and the Network Appliance design are registered trademarks of Network Appliance, Inc. in the United States, Canada, and the European Union. Network Appliance is a registered trademark of Network Appliance, Inc. in Monaco and a trademark of Network Appliance, Inc. in the United States and Canada. FAServer is a registered trademark of Network Appliance, Inc. in the United States and the European Union. NetCache is a registered trademark of Network Appliance, Inc. in the United States, Canada, the European Union, and Japan. SnapCopy is a registered trademark of Network Appliance, Inc. in the European Union and a trademark of Network Appliance, Inc. in the United States. WAFL is a registered trademark of Network Appliance, Inc. in the United States, the European Union, and Canada. DataFabric, FilerView, NearStore, SecureShare, SnapManager, SnapMirror, and SnapRestore are registered trademarks of Network Appliance, Inc. in the United States. Data ONTAP is a trademark of Network Appliance, Inc. in the United States and Canada. Snapshot is a trademark of Network Appliance, Inc. in the United States and the European Union. NetApp—the Network Appliance Company is a registered trademark of Network Appliance, Inc. in the United States and other countries. ApplianceWatch, BareMetal, Center-to-Edge, ContentDirector, gFiler, MultiStore, SecureAdmin, Serving Data by Design, Smart SAN, SnapCache, SnapDrive, SnapVault, vFiler, and Web Filer are trademarks of Network Appliance, Inc. in the United States. Spinnaker Networks, the Spinnaker Networks logo, SpinAccess, SpinCluster, SpinFS, SpinHA, SpinMove, SpinServer, and SpinStor are registered trademarks of Spinnaker Networks, LLC in the United States, other countries, or both. SpinAV, SpinManager, SpinMirror, and SpinShot are trademarks of Spinnaker Networks, LLC in the United States, other countries, or both.

Network Appliance is a licensee of the CompactFlash and CF Logo trademarks.

All other brands or products are trademarks or registered trademarks of their respective holders and should be treated as such.

SpinServer 4100 Field Service Guide

List of Figures v
List of Tables vii

1.0 About This Guide 1
1.1 Organization of the Guide 1
1.2 Statements of Warning 1

2.0 Safety Guidelines 3
2.1 Unpacking and Handling Equipment 3
2.2 Product Safety Guidelines 3
Preventing Static Electrical Discharge 3
Laser Radiation Precautions 4
Electrical Precautions 4
Electrical Warnings 5
SpinServer System Precautions 6
SpinStor 200 System Precautions 6

3.0 SpinServer Overview 9
3.1 Field-Replaceable Units 9
Replaceable Units 9
Nonreplaceable Units 10
3.2 Tools and Equipment 10
3.3 SpinServer Front Panel LEDs and Switches 10
SpinServer Front Panel LEDs 11
SpinServer Front Panel Switches 12
3.4 Additional LEDs on the SpinServer 12
SpinServer SCSI Drive Carrier LEDs 12
SpinServer Power Supply LEDs 13
3.5 SpinServer Interior Control Panel LEDs 13
3.6 SpinServer Management Tools 14

4.0 Access to the SpinServer Interior 15
4.1 Procedures Requiring Access to the Chassis Interior 15
4.2 Accessing the Interior of the SpinServer 15
Removing the SpinServer from a 42U System Cabinet 16
Spinnaker Rack Precautions 17
Extending the SpinServer from a Spinnaker Rack 18

5.0 SpinServer Shutdown 21
5.1 Procedures Requiring Shutdown 21
5.2 Shutting Down the SpinServer 21
5.3 Restarting the SpinServer 22

6.0 SpinServer Chassis 23
6.1 Identifying a Failed SpinServer Chassis 24
6.2 Replacing the SpinServer Chassis 24

7.0 SpinServer Fans 29
7.1 Identifying Failed Fans 29
Front Panel LEDs on the SpinServer 30
Fan LEDs on Interior Control Panel 30
7.2 Replacing the SpinServer Midchassis Fans 31
7.3 Replacing the SpinServer Rear Chassis Fans 32

8.0 SpinServer Memory Modules 33
8.1 Replacing the SpinServer Memory Modules 33

9.0 SpinServer PCI Adapters 35
9.1 Identifying the PCI Adapters 35
9.2 Replacing the SpinServer PCI Adapters 36

10.0 SpinServer Power Supplies 37
10.1 Identifying Failed Power Supplies 37
Front Panel LEDs on the SpinServer 37
Power Supply LEDs 38
10.2 Replacing the SpinServer Power Supply Units 39

11.0 SpinServer SCSI Disk Drives 41
11.1 Identifying Failed SCSI Disk Drives 41
11.2 Replacing the SpinServer SCSI Disk Drives 42

12.0 SpinStor 200 Overview 43
12.1 Field-Replaceable Units 43
Replaceable Units 43
12.2 Tools and Equipment 44
12.3 SpinStor 200 LEDs and Fault Indicators 44
SpinStor 200 RAID and JBOD Front Panel LEDs 45
SpinStor 200 RAID Back Panel LEDs 45
SpinStor 200 JBOD Back Panel LEDs 46

13.0 SpinStor 200 Disk Drives 47
13.1 Identifying Failed Disk Drives 47
13.2 Replacing the SpinStor 200 Disk Drives 47

14.0 SpinStor 200 GBICs 51
14.1 Identifying Failed GBICs 51
14.2 Replacing the SpinStor 200 GBICs 51
Replacing a Fibre GBIC 52
Replacing a Copper GBIC 52

15.0 SpinStor 200 I/O Modules 53
15.1 Identifying Failed I/O Modules 53
15.2 Replacing the SpinStor 200 I/O Modules 53
Replacing the RAID I/O Modules 54

Replacing the JBOD I/O Modules 55

16.0 SpinStor 200 Power Supply Units 57
16.1 Identifying Failed Power Supply Units 57
16.2 Replacing the SpinStor 200 Power Supply Units 58

17.0 UPS 61
17.1 Identifying the Failed UPS 61
Checking the UPS Battery 61
Recharging the Battery 62
Assessing Low Voltage 62
17.2 Tools and Equipment 63
17.3 Replacing the UPS 63

18.0 AC Transfer Switches 67
18.1 Identifying the Failed ATS 67
18.2 Replacing the ATS 67

19.0 Appendix A: Field Replaceable Units 69
19.1 SpinServer FRUs 69
19.2 SpinStor 200 FRUs 70
19.3 UPS FRUs 70
19.4 ATS FRUs 71

20.0 Glossary 73

List of Figures

Figure 3-1. The LEDs and switches on the front panel of the SpinServer chassis 11
Figure 3-2. The SCSI drive carrier LEDs 13
Figure 3-3. The power supply LED 13
Figure 3-4. The fan LEDs on the interior control panel of the SpinServer chassis 14
Figure 4-1. A single rack installation requires the attachment of the anti-tip plate. 18
Figure 4-2. SpinServer chassis thumbscrews 19
Figure 4-3. Fully extended SpinServer 19
Figure 4-4. Depress the white tab 20
Figure 5-1. Press the power button on the front panel of the SpinServer. 22
Figure 6-1. SpinServer cable connections 25
Figure 6-2. Depress the white tab 26
Figure 6-3. The inner slide is locked in place on the SpinServer with the locking tab. 26
Figure 6-4. The inner slide is inserted into the slide assembly in the rack. 27
Figure 7-1. SpinServer chassis fans 29
Figure 7-2. The LEDs and switches on the front panel of the SpinServer 30
Figure 7-3. Fan fail LEDs on the interior control panel 30
Figure 10-1. PS1 and PS2 are active power supplies. 37
Figure 10-2. The LEDs and switches on the front panel of the SpinServer 38
Figure 10-3. Replace a power supply unit 39
Figure 11-1. The SCSI drive carrier LEDs 41
Figure 12-1. The front panel LEDs on the SpinStor 200 RAID or JBOD 45
Figure 12-2. SpinStor 200 RAID back panel LEDs 45
Figure 12-3. SpinStor 200 JBOD back panel LEDs 46
Figure 13-1. Disk drive LED 47
Figure 13-2. Removal of disk drive canister from RAID or JBOD enclosure 48
Figure 13-3. Replacement of disk drive canister 49
Figure 15-1. Replace a RAID I/O module. 54
Figure 15-2. Replace a JBOD I/O module. 55
Figure 16-1. Replace a power supply unit 58
Figure 17-1. Rear view of the 120-volt UPS 63
Figure 17-2. Rear view of the 208-volt UPS 64
Figure 17-3. SpinServer serial cable is disconnected from the COM2 port. 64
Figure 17-4. Press the **|Test** power button on the 120-volt UPS. 65
Figure 18-1. Rear view of the 120-volt UPS 68
Figure 18-2. Rear view of the 208-volt ATS 68

List of Tables

Table 19-1. SpinServer FRUs 69
Table 19-2. SpinStor 200 FRUs 70
Table 19-3. UPS FRUs 70
Table 19-4. ATS FRUs 71

1.0 About This Guide

The *SpinServer 4100 Field Service Guide* is written for qualified service personnel who are familiar with the SpinServer® 4100 chassis and SpinStor® 200 disk enclosures. It includes information that is needed to remove and replace field-replaceable units (FRUs) and perform system-maintenance procedures.

The procedures in this guide describe replacement, upgrade, and maintenance tasks for personnel with the following skills and experience:

- Working familiarity with small computer system hardware and operation
- Basic understanding of common networking concepts and practices
- Working familiarity with accepted tools and procedures for installing and operating sensitive electronic equipment

Use this guide after you familiarize yourself with the SpinServer system by reading the following documents:

- *SpinServer 4100 Installation Guide*
- *SpinFS® 2.5 Administration Guide*

1.1 Organization of the Guide

This guide provides information and examples for the specific tasks that you must accomplish to repair the SpinServer and the SpinStor 200, and to maintain the components in each. The steps to accomplish these tasks are presented in the order in which field service personnel typically perform them. The guide also provides information for replacing a failed AC transfer switch (ATS) and uninterruptible power supply (UPS).

1.2 Statements of Warning

Statements of warning and caution are used in this guide. They have the following meanings and uses.

Warning: This statement indicates that failure to follow directions in the statement could result in bodily harm or loss of life.

Caution: This statement indicates that failure to follow directions in the statement could result in damage to equipment or loss of information and data.

Important: This statement presents clarifying information or specific instructions.

Note: A Note presents commentary, sidelights, or interesting points of information.

2.0 Safety Guidelines

This chapter provides safety guidelines for working with the SpinServer, SpinStor 200, UPS, and the FRUs.

Important: SpinStor 200 enclosures are used only with legacy SpinServer systems. New SpinServer systems use FAS270c (RAID) and DS14mk2 (JBOD) disk enclosures. See the *FAS270/270c Hardware and Service Guide* and the *Fibre Channel DiskShelf14 Hardware Guide* for information on servicing the FAS270c and DS14mk2, respectively.

2.1 Unpacking and Handling Equipment

To prevent damage to the components and avoid injury, carefully unpack and handle the SpinServer chassis and SpinStor 200 enclosures.

Inspect the box the components were shipped in and note whether the components were damaged in any way. If the components show evidence of damage, file a damage claim with the carrier who delivered it and contact Network Appliance Technical Support.

2.2 Product Safety Guidelines

Guidelines for safe handling and maintenance of the SpinServer, SpinStor 200, and FRUs are listed in this section.

Preventing Static Electrical Discharge

Static electricity is generated when two objects with different electrical charges come into contact with each other. An electrostatic discharge (ESD) is created to neutralize this difference. Electronic devices can be severely damaged by ESD.

To prevent damage to the equipment from ESD, follow these precautions:

- Do not unpack or install electronic equipment without using a properly grounded wrist

or heel strap.

- Keep all electronic assemblies such as Printed Circuit Boards (PCBs) and disk drives in their original ESD protective packaging until you are ready to install them.
- Handle all electronic assemblies carefully. Do not touch connectors, contacts, or component leads.
- Ensure that electronic assemblies do not come in contact with insulators such as clothing and plastics.

Laser Radiation Precautions

The SpinServer and the SpinStor 200 emit invisible laser radiation.

Warning: CLASS 1 LASER PRODUCT

Warning: Lasers emit invisible radiation from the aperture opening when no fiber-optic cable is connected. When removing cables, do not stare into the open apertures. In addition, install protective aperture covers to fiber ports with no cable connected.

Electrical Precautions

To prevent serious damage to yourself and SpinServer components, always observe basic electrical precautions, including the following:

- Use only one hand when working with powered-on electrical equipment. This is to avoid making a complete circuit, which causes electrical shock. Use extreme caution when using metal tools, which can easily damage any electrical components or circuit boards they touch.
- Do not use mats designed to decrease static electrical discharge as protection from electrical shock. Instead, use rubber mats that have been specifically designed as electrical insulators.
- Call Network Appliance Technical Support when the battery near the DIMM modules in the SpinServer chassis, which maintains clock settings during power failure, needs to be replaced. Improper installation causes damage to the equipment.

Caution: There is a risk of explosion if the battery is replaced by an incorrect type. Dispose of used batteries according to the instructions.

Electrical Warnings

To prevent serious injury to yourself and damage to SpinServer components, always observe the following electrical warnings:

Warning: Be aware of the locations of the power-on/off switch on the chassis, as well as the room's emergency power-off switch, disconnection switch, or electrical outlet. If an electrical accident occurs, quickly remove power from the system.

Warning: When working with high-voltage components or exposed electrical circuits, do not work alone. Be sure to have another person nearby who is familiar with the power controls to switch off the power if necessary.

Warning: Use only power cords with a grounding plug. Always plug the cords into grounded electrical outlets.

Warning: SpinServer and SpinStor 200 products have *Power-On/Standby* power switches. *Power-On/Standby* power switches, when in the *Standby* position, do not completely remove AC power from the equipment. For equipment with this type of power switch, the AC power cords serve as the main disconnect device. When performing maintenance that requires the equipment to be completely powered down, put the power switch in the *Standby* position, and remove all power cords from the equipment.

Warning: Some equipment is provided with multiple power cords. To disconnect all power from the equipment, remove all power cords.

Warning: To avoid potential burns, remove all chains, rings, watches, and other metal jewelry when performing maintenance on powered-on equipment. Burns can be caused by the flow of current through a metallic object if the metallic object comes in contact with powered circuits.

Warning: The power supply units for SpinStor 200 products have detachable power cords. Disconnect the power cord at the power supply unit before removing the power supply unit from the enclosure. When installing a power supply unit, insert the power supply unit into the enclosure before connecting the power cord.

SpinServer System Precautions

To ensure general safety, follow these guidelines.

- Keep the area around the SpinServer system clean and free of clutter.
- When servicing the SpinServer, place the server chassis top cover, and any system components that have been removed, in a safe location to avoid damaging them.
- Use a UPS to protect your SpinServer from power surges and voltage spikes and to keep your system operating in the event of a power failure.
- Do not wear jewelry or other metal objects that are excellent conductors. If such items come into contact with circuit boards or areas where power is present, a short circuit can be created.
- Before replacing any components that are not hot swappable, power down the SpinServer and disconnect all AC power cords. After accessing the interior of the SpinServer, close the top cover securely, slide the chassis back into position, and fasten the screws on the front panel to the rack.
- When replacing failed components, ensure that the new unit is fully inserted and secure in the SpinServer chassis or the SpinStor 200 enclosure.

Warning: During normal operations, the internal components of the SpinServer and SpinStor 200 become hot. During service operations, avoid touching hot surfaces.

Warning: To prevent personal injury, always allow the blowers to spin down before removing the blower assembly.

Warning: To prevent personal injury, always allow the fans to spin down before removing the fan assembly.

Warning: To prevent injury when performing maintenance on a powered-down SpinServer, disconnect the power cords from all AC inlets before opening the cover of a server chassis.

SpinStor 200 System Precautions

Observe the following warnings and cautions when working with the SpinStor 200.

Warning: CLASS 1 LASER PRODUCT

Warning: Lasers emit invisible radiation from the aperture opening when no fiber-optic cable is connected. When removing cables, do not stare into the open apertures. In addition, install protective aperture covers to fiber ports with no cable connected.

Warning: The RAID and JBOD disk enclosures, without the disk carriers, require at least two people to lift and handle the chassis. When lifting the chassis, handle it in such a way that the weight is evenly distributed and stabilized. Follow national or regional safety standards when lifting or repositioning any SpinServer system components.

Warning: The power supply units for SpinStor 200 products have detachable power cords. Disconnect the power cord at the power supply unit before removing the power supply unit from the enclosure. When installing a power supply unit, insert the power supply unit into the enclosure before connecting the power cord.

Warning: Do not remove covers from the power supply unit. Danger of electric shock inside. Return the PSU to your supplier for repair.

Warning: During normal operations, the internal components of the SpinServer and SpinStor 200 become hot. During service operations, avoid touching hot surfaces.

Warning: Do not lift the SpinStor 200 enclosure by means of the extended I/O module.

Warning: Do not lift the SpinStor 200 enclosure by the handles on the power supply unit; they are not designed to support the weight of the populated enclosure.

Warning: The battery in the RAID I/O module is not user replaceable. There is a danger of explosion if the battery is incorrectly replaced. The battery must be replaced only by trained service personnel.

Warning: Operation of the disk enclosure with *any* modules missing disrupts the airflow and prevents the drives from receiving sufficient cooling. It is *essential* that all apertures are filled before the unit is operated. Dummy drive carriers are available to fill empty apertures.

Warning: The power connections must always be disconnected prior to removal of a power supply unit from the enclosure.

Warning: If the SpinStor 200 system is powered up and you remove any module, replace the module immediately. If the system is used with modules or module blanks missing for more than a few minutes, the enclosure can overheat, causing power failure and data loss. Such use invalidates the warranty.

Caution: If this equipment is used in a manner not specified by the manufacturer, the protection provided by the equipment might be impaired.

Caution: Handle the power supply unit carefully and avoid damaging the connector pins. Do not install the unit if any pins appear to be bent.

Caution: Ensure that the front, back, and sides of the disk enclosure are not blocked after installation of the enclosure into a cabinet or closed environment. Blocking the front, back, or sides of the enclosure can cause reduced airflow that compromises effective heat removal.

Caution: It is recommended that you fit and check a suitable antistatic wrist or ankle strap and observe all conventional ESD precautions when handling SpinStor2 plug-in modules and components. Avoid contact with backplane components, module connectors, etc.

Important: If main power is lost for any reason, the enclosure restarts automatically when power is restored.

3.0 SpinServer Overview

This chapter provides information about the SpinServer chassis units that are field replaceable, the tools and equipment that you need to replace the units, and the front panel LEDs.

Note: A complete listing of the field replaceable units is provided in “Appendix A: Field Replaceable Units” on page 69.

Note: You must purchase all field replaceable units from Network Appliance or an authorized reseller.

3.1 Field-Replaceable Units

The SpinServer is designed for easy access to exterior and interior units so that you can remove and install units in the field. The units are accessible from the front panel of the SpinServer chassis or from inside the SpinServer chassis.

Replaceable Units

The following units can be individually replaced in the SpinServer chassis. The power supplies and the SCSI disk drives are accessible from the front panel of the SpinServer chassis. The others are accessible from the interior of the SpinServer chassis.

Note: There are no FRUs accessible from the rear panel of the SpinServer chassis.

- Power supplies
- Midchassis intake fan assemblies
- Rear chassis exhaust fan assembly
- Dual in-line memory modules (DIMMs)
- Peripheral component interconnect (PCI) adapters
- SCSI disk drives
- Fibre Channel adapter for disk shelves
- Gigabit Ethernet (GbE) network interface cards (NICs)

Nonreplaceable Units

The following units cannot be individually replaced in the SpinServer chassis.

Note: Failure of any of these parts requires the replacement of the entire SpinServer chassis.

- CPU cooler fans
- Motherboard
- CD-ROM drive
- Diskette drive
- Control/Status panel

3.2 Tools and Equipment

To replace FRUs, you need the following tools and equipment:

- Phillips screwdrivers (#0, #1, and #2)
- Flat-blade screwdriver
- Antistatic wrist strap and grounding leash

3.3 SpinServer Front Panel LEDs and Switches

The front panel of the SpinServer includes several LED indicators, audible alarms, and switches. The LEDs provide information about the operational status of specific components in the SpinServer chassis. The three push-button switches can be used to take appropriate action, if necessary, based on the LED and audible alarm information.

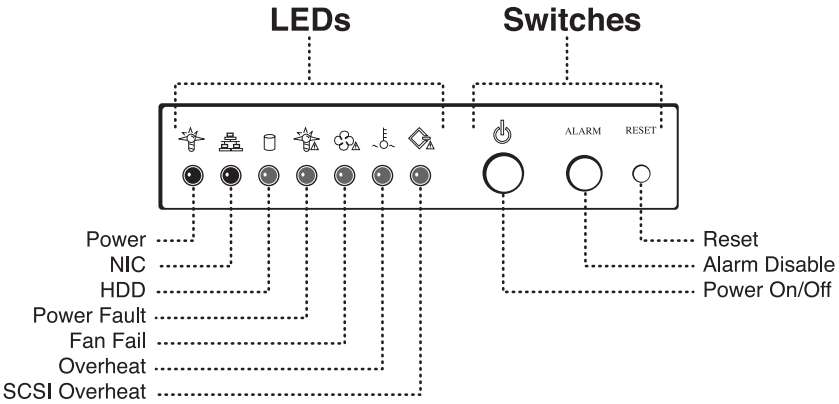

Figure 3-1. The LEDs and switches on the front panel of the SpinServer chassis

SpinServer Front Panel LEDs

The front control panel has the following seven LEDs:

Power: This LED indicates that power is being supplied to the SpinServer power supply units. It is illuminated green when the system is operating. If the power LED is not illuminated, verify that all power cords are properly connected and the UPS is plugged into a grounded wall outlet. Also, verify that the output of the UPS is turned on.

If the power cords are properly connected and the LED is red, a power unit needs to be replaced. Check the power supply LEDs at the front of the SpinServer to determine which one needs to be replaced.

NIC: When flashing green, the network interface card (NIC) connection LED indicates activity on the motherboard.

HDD: When flashing green, the hard disk drive (HDD) LED indicates integrated drive electronics (IDE) activity. The CD-ROM is the only drive connected to the IDE bus.

Power Fault: When illuminated red, this LED indicates a power supply failure. It is accompanied by an audible alarm. The alarm can be disabled with the ALARM push-button switch on the front panel.

Fan Fail: When illuminated red, this LED indicates a system fan failure in one or more of the intake or exhaust fans. A fan failure is accompanied by an audible alarm. Pushing the ALARM button disables this alarm.

When a fan stops working, the other system fans increase their revolutions per minute (RPM) to compensate until the failed unit is replaced. In the event of a fan failure, check the fan LEDs on the interior control panel to determine which fan has failed.

Overheat: When illuminated red, this LED indicates an overheated condition in the chassis.

SCSI Overheat: The Single Connector Attachment (SCA) is a type of disk drive connector that includes connection pins for power cables and data wires. When the SCSI Overheat LED is illuminated red, it indicates an overheated condition in the area of the SCSI drives and backplane.

SpinServer Front Panel Switches

There are three push-button switches on the front of the SpinServer: Power On/Off, Alarm Disable, and Reset. Their purposes follow.

Power On/Off: This is the main power switch, used to turn on or off the power that is supplied to the power supply units in the SpinServer.

Alarm Disable: An audible alarm is generated to alert you to an overheated chassis or a failed fan or power supply. Depressing the ALARM switch disables the alarm. The LED indicating the cause of the alarm remains illuminated after the audible alarm is disabled.

Reset: The RESET switch restarts the SpinServer.

Important: It is not recommended that the Reset button be used to restart the SpinServer during normal operations because this method does not provide the system with the time necessary to properly save all data.

3.4 Additional LEDs on the SpinServer

There are additional LED indicators on the SpinServer chassis for the SCSI drives and the power supply units.

SpinServer SCSI Drive Carrier LEDs

Each SCSI drive has two LEDs on the front of the drive carrier: the top LED is green and the bottom one is red.

Note: The leftmost SCSI drive slot is labeled Slot 0. The drives in Slot 0 and Slot 1 are active drives. The drives in Slots 2 and 3 are empty disk carriers. The LEDs on the inactive drives are not illuminated.

When the green LED is illuminated, the drive is being accessed. When the red LED is illuminated, the SCSI drive has experienced a fault or has failed.

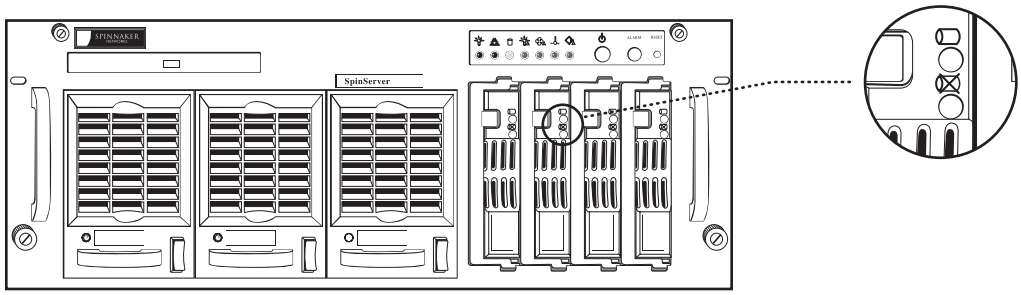

Figure 3-2. The SCSI drive carrier LEDs

SpinServer Power Supply LEDs

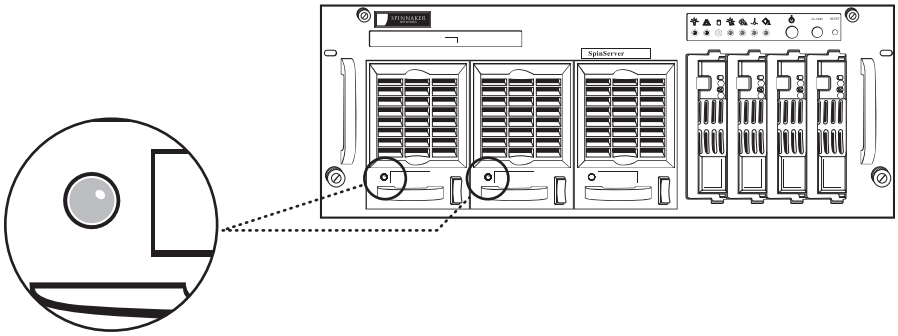

Figure 3-3. The power supply LED

Each power unit has a single LED that can be illuminated either red or green. When the power unit has AC power supplied to it and the SpinServer is powered on, the LED is green. This indicates that the unit is operating normally.

If there is AC power supplied to the system but the system power is turned off, the power supply unit LEDs are normally red. When the system power is on and the power supply unit LED is red, the power supply has failed and needs to be replaced.

There is an audible alarm when AC power is absent from one power supply unit but the other power supply unit is operating normally. The LED for the power supply unit without AC power is not illuminated.

3.5 SpinServer Interior Control Panel LEDs

The interior control panel of the SpinServer includes the LEDs for the five fans. The LEDs provide information about the operational status of each fan in the SpinServer chassis.

Under normal operating conditions, the fan LEDs are not illuminated. When a fan fails, the LED associated with the failed fan is illuminated red.

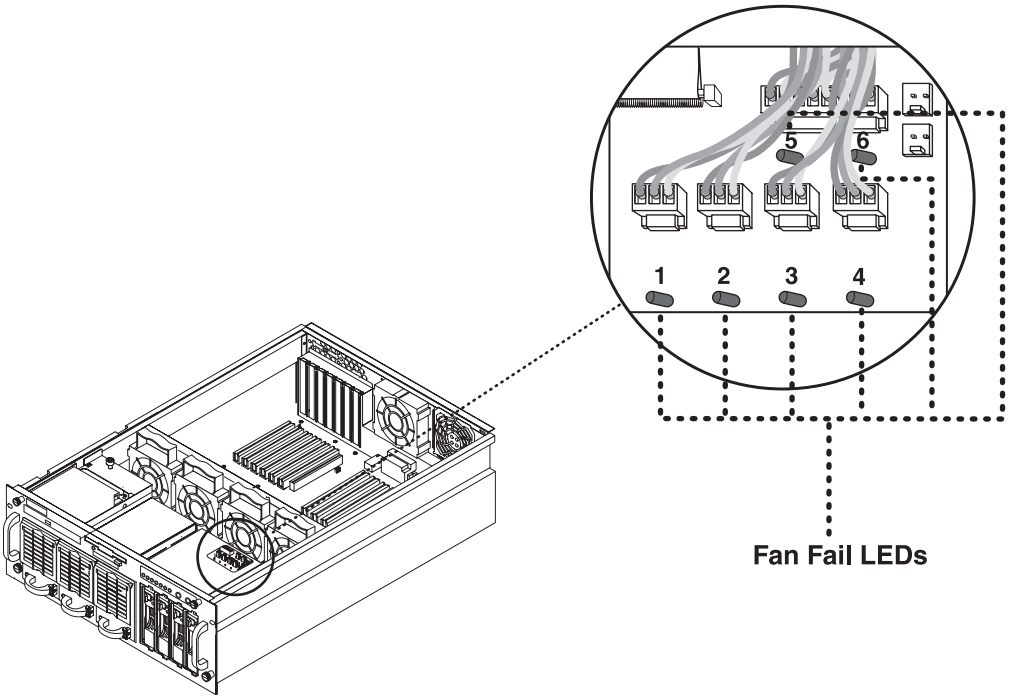

Figure 3-4. The fan LEDs on the interior control panel of the SpinServer chassis

3.6 SpinServer Management Tools

The SpinServer is configured and managed by using SpinManager™, the file- management tool suite that included with the SpinFS® software, which is installed on the SCSI disk drives in the SpinServer chassis.

SpinManager is accessible via both a browser-based graphical user interface (GUI) and a command line interface (CLI).

4.0 Access to the SpinServer Interior

This chapter provides information about accessing the interior of the SpinServer chassis. To service the FRUs inside the SpinServer chassis, extend the SpinServer from the equipment rack and remove the top cover of the chassis.

When working with the SpinServer, it is important to remember that the SpinServer emits invisible laser radiation.

Warning: CLASS 1 LASER PRODUCT

Warning: Lasers emit invisible radiation from the aperture opening when no fiber-optic cable is connected. When removing cables, do not stare into the open apertures. In addition, install protective aperture covers to fiber ports with no cable connected.

4.1 Procedures Requiring Access to the Chassis Interior

To replace the following FRUs, you must have access to the interior of the SpinServer chassis:

- Midchassis intake fans
- Rear chassis exhaust fan
- Memory modules
- PCI adapters

4.2 Accessing the Interior of the SpinServer

When accessing the interior of the SpinServer chassis, follow all safety guidelines, including the following warning notices.

Warning: To prevent injury when performing maintenance on a powered-down SpinServer, disconnect the power cords from all AC inlets before opening the cover of a server chassis.

Removing the SpinServer from a 42U System Cabinet

Warning: Follow all warnings in the *42U System Cabinet Guide* when working with a 42U system cabinet.

If the SpinServer system is in a 42U system cabinet, you must remove the SpinServer chassis from the cabinet to replace the following FRUs:

- SpinServer chassis
- Fans
- Memory modules
- PCI adapters

Replacement of a SpinServer's power supplies and SCSI disk drives do not require removal of the chassis from the cabinet.

Perform the following steps to remove the SpinServer chassis from a 42U system cabinet:

Step	Action
1	Ensure that all virtual interfaces, virtual servers, and storage pools on the faulty SpinServer have failed over to a functional SpinServer. See the *Administration Guide* for information on manually failing over virtual interfaces, virtual servers, and storage pools.
2	Shut down the faulty SpinServer as described in "SpinServer Shutdown" on page 21.
3	Disconnect all network cables and power cords.
4	Optionally remove the power supplies and SCSI disk drives. Removing the power supplies and SCSI disk drives reduces the weight of the chassis to approximately 50 pounds (22.7 kg). See "SpinServer Power Supplies" on page 37 and "SpinServer SCSI Disk Drives" on page 41 for information on removing these components.
5	Loosen the rack mount thumbscrews and remove the rack mount screws that attach the SpinServer chassis to the equipment cabinet.
6	Remove the SpinServer chassis from the equipment cabinet.
7	Perform the required maintenance procedures.

Step	Action
8	Reinstall the SpinServer chassis into the equipment cabinet; if necessary, reinstall the power supplies and SCSI disk drives. See “SpinServer Power Supplies” on page 37 and “SpinServer SCSI Disk Drives” on page 41 for information on reinstalling these components.
9	Secure the chassis to the equipment cabinet by tightening the rack lock thumbscrews and replacing the rack mount screws.
10	Reattach all network cables and power cords.
11	Restart the SpinServer and ensure that all virtual interfaces, virtual servers, and storage pools are returned to the repaired SpinServer. See the *Administration Guide* for more information.

Spinnaker Rack Precautions

Important: The rack precautions described here apply only to legacy Spinnaker equipment racks. New SpinServer systems are installed in Network Appliance equipment cabinets; see the *42U System Cabinet Guide* for information on Network Appliance cabinets.

Before extending the SpinServer from the rack, ensure that the rack is on a level surface and all safety precautions are observed.

Warning: Extend only one rack component at a time. Extending two or more rack components simultaneously can cause the rack to become unstable and tip over, causing serious injury and damage to equipment.

When accessing the interior of the SpinServer chassis, make sure that the leveling jacks on the bottom of the rack are fully extended to the floor with the full weight of the rack resting on them.

Figure 4-1. A single rack installation requires the attachment of the anti-tip plate.

Extending the SpinServer from a Spinnaker Rack

Important: The rack procedures described here apply only to legacy Spinnaker equipment racks. New SpinServer systems are installed in Network Appliance equipment cabinets and do not necessarily use rack slide assemblies. Contact Network Appliance Technical Support if you need assistance extending SpinServer system components from a Network Appliance equipment cabinet.

With the rack in a stable position, follow these steps to extend the SpinServer chassis from the rack:

Step	Action
1	Loosen both of the rack lock thumbscrews on the front panel, located below the handles of the chassis. 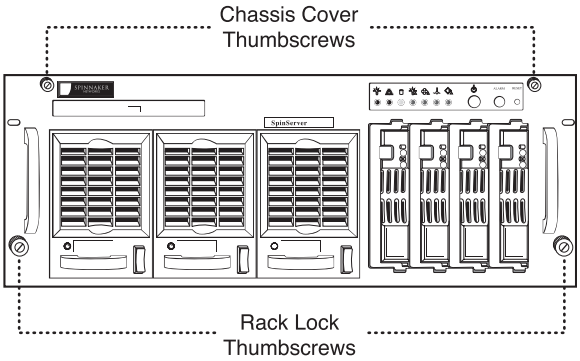 Figure 4-2. SpinServer chassis thumbscrews
2	To allow the chassis to be fully extended from the rack, ensure that all cables connected to the SpinServer have a sufficient service loop of at least 3 feet (1 meter).
3	Grasping the handles on the front panel of the chassis, slowly extend the SpinServer until you hear a click as the slide assembly is locked in place. **Note:** Check all cables for tension. 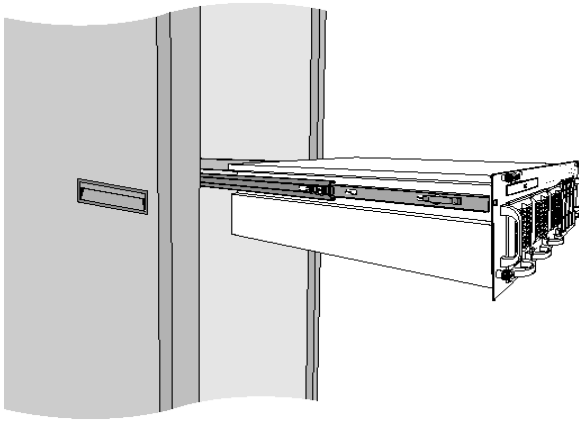 Figure 4-3. Fully extended SpinServer
4	Remove the top cover of the chassis by loosening the top cover thumbscrews.
5	Place your thumbs in the cover recesses on the chassis cover and push the cover towards the rear of the chassis.
6	Remove the cover from the chassis.
7	When the maintenance task is completed, replace the chassis cover and tighten the chassis cover thumbscrews.

Step	Action
8	Depress the white tabs on both slide assemblies and with even pressure on both front corners of the SpinServer, push the SpinServer into the rack. 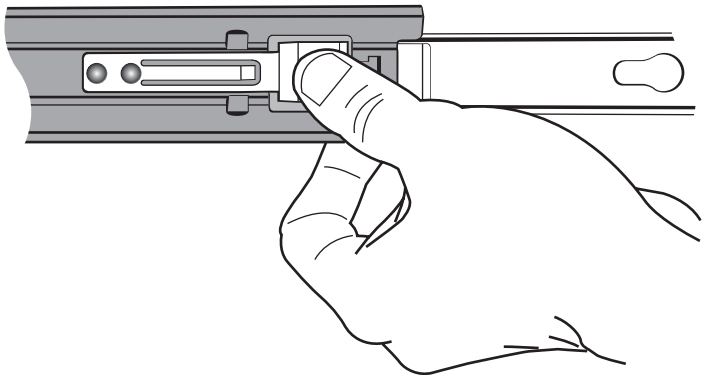 Figure 4-4. Depress the white tab.
9	Secure the SpinServer in the rack by tightening the rack lock thumbscrews on the front panel of the SpinServer chassis.

5.0 SpinServer Shutdown

It is important to power down the system properly to provide the system with the time necessary to properly save all data before the power is turned off.

Note: It is not recommended that the Reset button be used to restart the SpinServer because this method is a cold start and does not provide the system with the time necessary to save all data.

5.1 Procedures Requiring Shutdown

There are maintenance procedures that require the SpinServer to be shut down.

Important: If a maintenance procedure requires the SpinServer to be shut down, check with the system administrator before proceeding.

To replace the following FRUs, the SpinServer must be shut down:

- DIMMs
- PCI adapters
- Fans
- UPS
- SpinServer chassis

Warning: To prevent injury when performing maintenance on a powered-down SpinServer, disconnect the power cords from all AC inlets before opening the cover of a server chassis.

5.2 Shutting Down the SpinServer

To power down the SpinServer, use one of the following methods:

- Log onto the system by using SpinManager and run the **`spinservers shutdown`**

command. After the command is completed, it is safe to turn off the SpinServer by pressing the power button on the front panel.

- Press the power button on the front panel of the SpinServer. The SpinServer runs the **`shutdown`** command. When the button is pressed, the power LED flashes green once per second while the shutdown routine is performed. The shutdown routine takes about 18 seconds to complete.

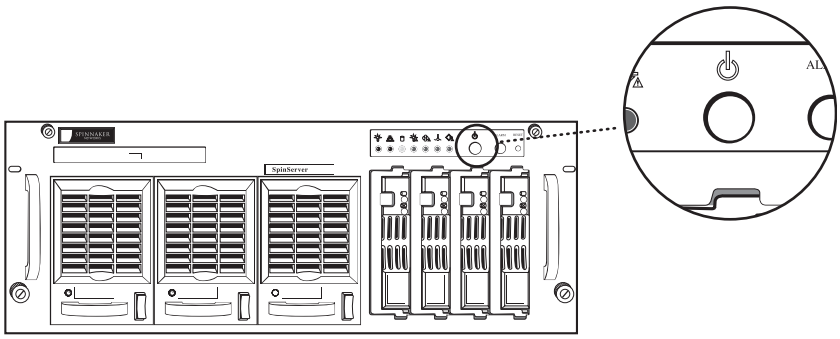

Figure 5-1. Press the power button on the front panel of the SpinServer.

Caution: This shutdown routine can be overridden by holding the power button down for more than five seconds. However, this can cause loss of data because the file system logs have not been previously saved. Overriding the shutdown routine is safe only if the file system logs have been written to disk.

After the shutdown process is finished, the power LED for the SpinServer is no longer illuminated, and the LEDs for the power supplies display red.

5.3 Restarting the SpinServer

When maintenance tasks are completed, press the power button to restart the SpinServer.

6.0 SpinServer Chassis

This chapter provides information about replacing the SpinServer chassis. When a chassis component that is not an FRU fails, the entire SpinServer chassis must be replaced.

To replace the SpinServer chassis, remove the working FRUs from the chassis. These FRUs are reused in the replacement chassis. To replace the chassis, you must completely remove it from the rack.

Note: The rear exhaust fan in the SpinServer chassis is installed in the replacement chassis. Do not remove and reuse the rear exhaust fan.

Warning: The SpinServer chassis requires at least two people to lift and handle the chassis. When lifting the chassis, handle it in such a way that the weight is evenly distributed and stabilized. Follow national or regional safety standards when lifting or repositioning any SpinServer system components.

Warning: To prevent injury when performing maintenance on a powered-down SpinServer, disconnect the power cords from all AC inlets before opening the cover of a server chassis.

Important: On the server chassis, the removable power supplies have handles to help facilitate their removal. Never use these handles to lift or carry the chassis.

Caution: Do not unpack, install, or remove electronic equipment without using a properly grounded wrist or heel strap.

6.1 Identifying a Failed SpinServer Chassis

A SpinServer chassis fails because any one of the following units fails. These units cannot be individually replaced in the SpinServer chassis, and the failure of any of these units requires the replacement of the entire SpinServer chassis.

- CPU cooler fans
- Motherboard
- CD-ROM drive
- Diskette drive
- Control/Status panel

6.2 Replacing the SpinServer Chassis

To replace the SpinServer chassis, perform the following steps:

Important: The rack procedures described here apply only to legacy Spinnaker equipment racks. New SpinServer systems are installed in Network Appliance equipment cabinets and do not use rack slide assemblies. Contact Network Appliance Technical Support if you need assistance extending SpinServer system components from a Network Appliance equipment cabinet.

Step	Action
1	Shut down the SpinServer. See “SpinServer Shutdown” on page 21 for the proper procedures.
2	Extend or remove the SpinServer chassis from the rack. See “Access to the SpinServer Interior” on page 15 for the proper procedures. Remove the chassis cover.

Step	Action
3	Disconnect all cables from the rear panel of the SpinServer chassis. The following illustration indicate these cable connection points: • Power supply ports 1 and 2 • Console (COM1) • UPS serial port (COM2) • Fibre Channel ports (0 and 1) • Network ports (serv0 and serv1) • Cluster ports (clus0 and clus1) 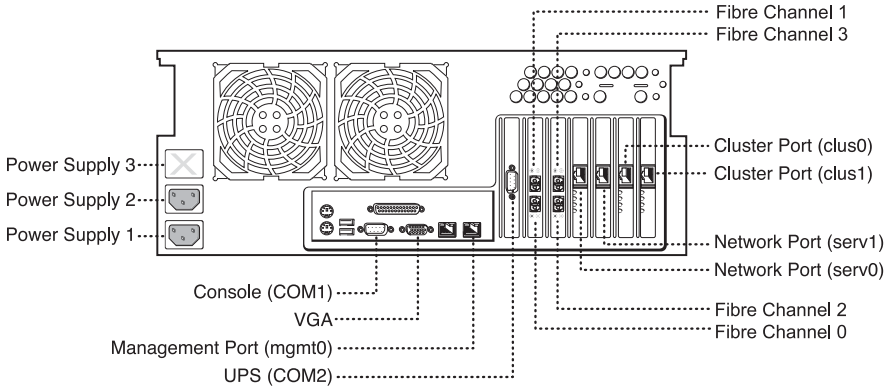 Figure 6-1. SpinServer cable connections
4	Remove both power supplies, PS1 and PS2, by following the directions in “SpinServer Power Supplies” on page 37.
5	Remove both active SCSI disk drives, slot 0 and slot 1, by following directions in “SpinServer SCSI Disk Drives” on page 41.

Step	Action
6	**Note:** Steps 6 through 10 apply only to a SpinServer chassis in a legacy Spinnaker rack. Depress the white tabs on both slide assemblies and with even pressure on both front corners of the SpinServer, slowly pull the SpinServer out of the slide assemblies. 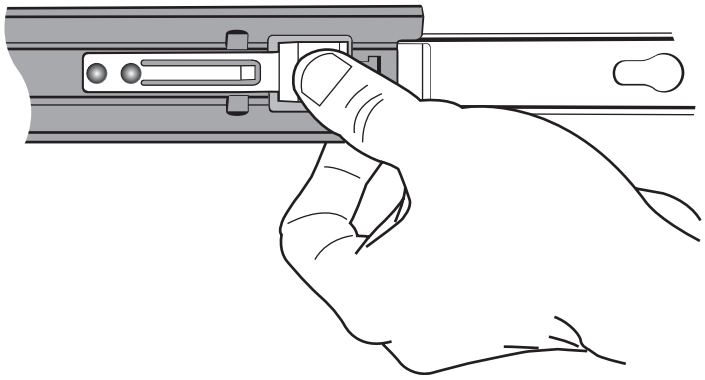 Figure 6-2. Depress the white tab.
7	Remove the inner slides from the SpinServer by flexing the locking tab away from the chassis and pushing the inner slide toward the rear of the chassis. Set the SpinServer chassis aside.
8	Reuse the inner slides for the replacement chassis. Place the inner slide section over the shoulder screws on the SpinServer and push it toward the front of the SpinServer to lock it in place. 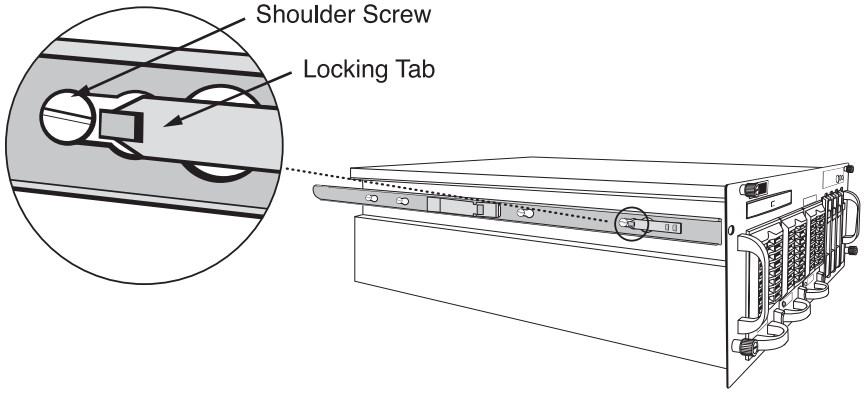 Figure 6-3. The inner slide is locked in place on the SpinServer with the locking tab.

Step	Action
9	With two people lifting the SpinServer, guide the inner slide into the slide assembly mounted in the rack until it stops. 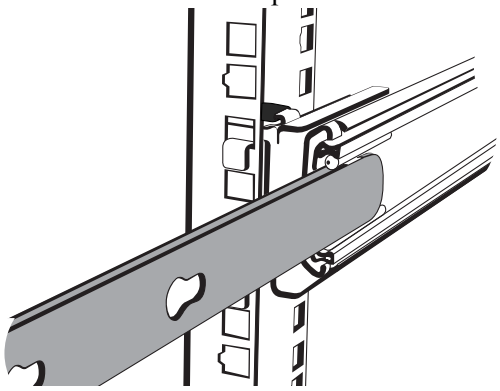 Figure 6-4. The inner slide is inserted into the slide assembly in the rack.
10	Depress the white tabs and with even pressure on both front corners of the SpinServer, push the SpinServer the remainder of the way into the rack until it is locked in place. **Note:** The first time the SpinServer is pushed in, it requires some additional pressure to seat the ball bearings.
11	Extend or remove the replacement chassis from the rack and remove the cover from the chassis.
12	Remove the four midchassis intake fans by following the directions in “SpinServer Fans” on page 29.
13	From the failed chassis, remove the PCI adapter from slot 1 and install it into slot 1 in the replacement chassis. Continue this process until you have installed the PCI adapters 1 through 7 into the replacement chassis. See “SpinServer PCI Adapters” on page 35 for additional information about the PCI adapters.
14	From the failed chassis, remove all DIMMs and install the DIMMs into the DIMM banks in the replacement chassis.
15	Into the replacement chassis, insert the four midchassis intake fans that were removed from the failed chassis. Follow the instructions in “SpinServer Fans” on page 29.
16	Into the replacement chassis, insert both SCSI disk drives that were removed from the failed chassis. Follow the instructions in “SpinServer SCSI Disk Drives” on page 41.
17	Into the replacement chassis, insert both power supplies that were removed from the failed chassis. Follow the instructions in “SpinServer Power Supplies” on page 37.
18	Replace the cover of the SpinServer chassis and push the chassis into the rack.

Step	Action
19	Secure the chassis to the rack with the rack lock thumbscrews and, if needed, the rack lock screws.

7.0 SpinServer Fans

This chapter provides information about replacing the SpinServer fans: the four midchassis intake fans and the single rear chassis exhaust fan.

All of the fans are accessible from the interior of the SpinServer chassis, and all of the fans are hot swappable. You do not need to power down the SpinServer to replace a chassis fan.

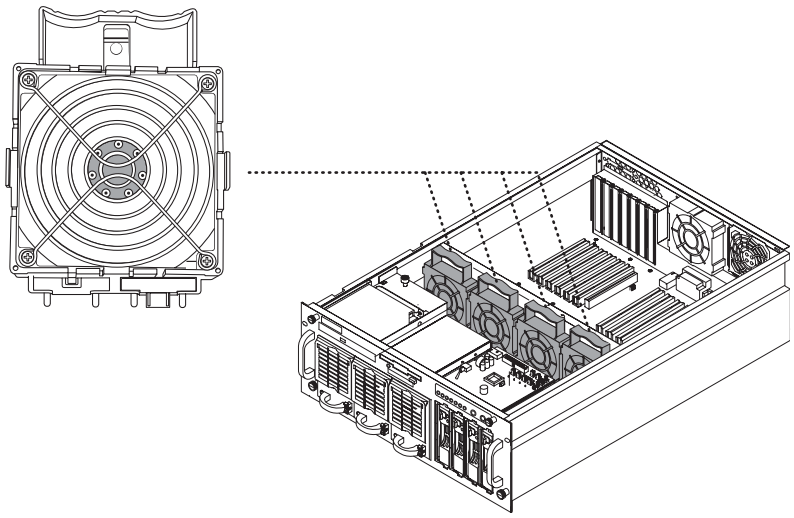

Figure 7-1. SpinServer chassis fans

Note: Before accessing the interior of the SpinServer chassis, see the chapter “SpinServer Interior Access” on page 15 for the procedures to extend or remove the chassis from the rack and remove the chassis cover.

Warning: To prevent personal injury, always allow the fans to spin down before removing the fan assembly.

7.1 Identifying Failed Fans

When a SpinServer chassis fan fails, the following two indicators identify a fan failure:

- The Fan Fail LED on the front panel of the SpinServer
- The fan fail LEDs on the control panel in the interior of the SpinServer chassis

Front Panel LEDs on the SpinServer

The Fan Fail LED on the front panel of the SpinServer is illuminated red when a chassis fan fails. The Fan Fail LED flashes red when any one of the intake or exhaust fans fails. A fan failure is accompanied by an audible alarm. Pushing the ALARM button disables this alarm.

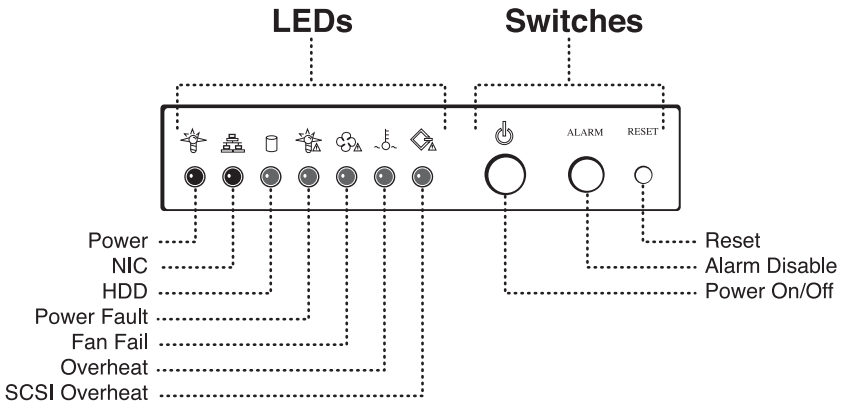

Figure 7-2. The LEDs and switches on the front panel of the SpinServer

Fan LEDs on Interior Control Panel

With the chassis cover removed, you can identify which fan has failed by checking the red LEDs on the interior control panel.

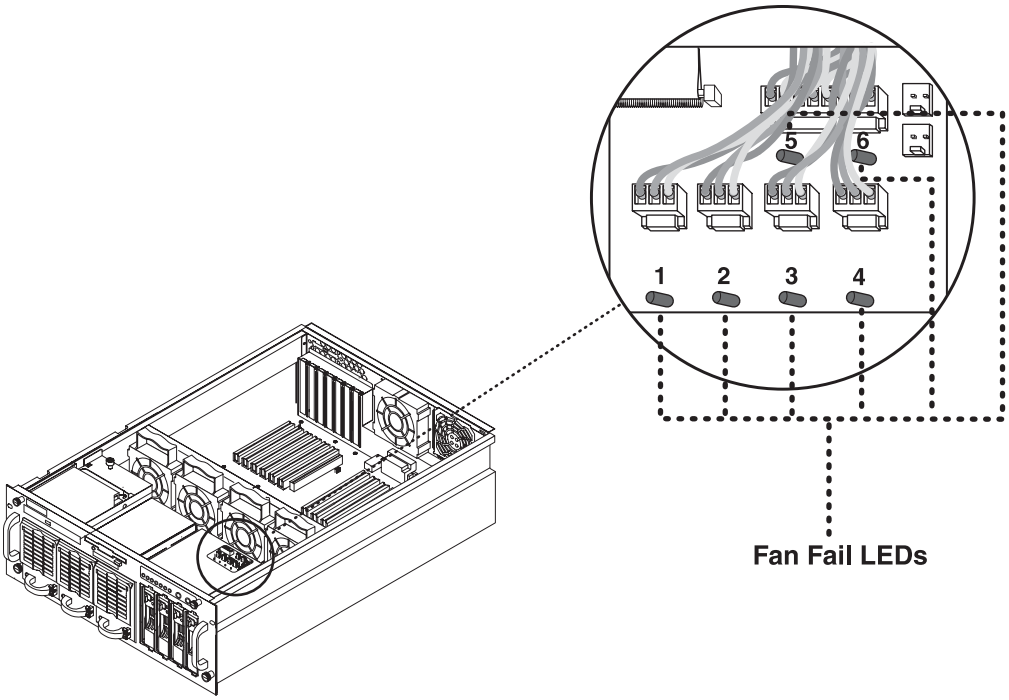

Figure 7-3. Fan fail LEDs on the interior control panel

There are four LEDs for the midchassis intake fans (Positions 1 through 4) and one LED for the rear exhaust fan (Position 5). The positions of the LEDs correspond to the positions of the fans in the chassis, making it easy to identify the failed fan. The failed fan's LED is illuminated red.

Note: The rear exhaust fan housing in Position 6 is empty.

7.2 Replacing the SpinServer Midchassis Fans

To replace a failed midchassis intake fan, follow these steps:

Important: The rack procedures described here apply only to legacy Spinnaker equipment racks. New SpinServer systems are installed in Network Appliance equipment cabinets and do not use rack slide assemblies. Contact Network Appliance Technical Support if you need assistance extending or removing SpinServer system components from a Network Appliance equipment cabinet.

Step	Action
1	Extend or remove the SpinServer chassis from the rack. See "Access to the SpinServer Interior" on page 15 for the proper procedures. Remove the chassis cover.
2	Remove the fan unit from the chassis by depressing the locking tab on the fan housing.
3	Pull the fan unit straight up to remove it from the SpinServer chassis.
4	Insert the new fan into the housing and push down until you hear it click into place.
5	Verify that the fan is working properly.
6	Verify that all LEDs on the control panel in the interior of the SpinServer chassis are no longer illuminated.
7	Replace the cover of the SpinServer chassis and push the chassis into the rack.
8	Secure the chassis to the rack with the rack lock thumbscrews.

7.3 Replacing the SpinServer Rear Chassis Fans

To replace a failed rear chassis exhaust fan, follow these steps:

Important: The rack procedures described here apply only to legacy Spinnaker equipment racks. New SpinServer systems are installed in Network Appliance equipment cabinets and do not use rack slide assemblies. Contact Network Appliance Technical Support if you need assistance extending SpinServer system components from a Network Appliance equipment cabinet.

Step	Action
1	Extend or remove the SpinServer chassis from the rack. See “Access to the SpinServer Interior” on page 15 for the proper procedures. Remove the chassis cover.
2	With the SpinServer chassis cover removed, unplug the fan power cable for the failed fan from the interior control panel of the chassis.
3	Remove the fan unit from the chassis by depressing the locking tabs at the top and bottom of the fan housing, which protrude through the rear of the SpinServer chassis. This detaches the fan housing from the chassis. **Note:** The second rear chassis exhaust fan housing is empty.
4	Reach inside the chassis and pull the housing out of its slot.
5	Unscrew the four screws that hold the fan in the housing.
6	Pull the fan unit straight out to remove it from the fan housing.
7	Insert the new fan into the housing and push down until you hear it click into place. Push the locking tab down to ensure that the unit is fully inserted and secure in the chassis.
8	Plug the fan cable into the new fan unit and receptacle on the rear panel of the chassis.
9	Verify that the fan is working properly.
10	Verify that all LEDs on the control panel in the interior of the SpinServer chassis are no longer illuminated.
11	Replace the cover of the SpinServer chassis and push the chassis into the rack.
12	Secure the chassis to the rack with the rack lock thumbscrews.

8.0 SpinServer Memory Modules

This chapter provides information about replacing the SpinServer DIMMs.

The DIMMs are accessible from the interior of the SpinServer chassis.

Note: Before accessing the interior of the SpinServer chassis, see the chapter "SpinServer Interior Access" for the procedures to extend or remove the chassis from the rack and remove the chassis cover. See page 15.

Caution: The DIMMs are not hot swappable. The SpinServer must be shut down prior to replacing the DIMMs.

Warning: Always disconnect all power cords from all AC inlets of the system when installing memory modules in the SpinServer.

Note: DIMMs in the same bank are matched and must be replaced as a pair.

8.1 Replacing the SpinServer Memory Modules

To replace the DIMMs, perform the following steps.

Important: The rack procedures described here apply only to legacy Spinnaker equipment racks. New SpinServer systems are installed in Network Appliance equipment cabinets and do not use rack slide assemblies. Contact Network Appliance Technical Support if you need assistance extending SpinServer system components from a Network Appliance equipment cabinet.

Caution: Do not unpack, install, or remove electronic equipment without using a properly grounded wrist or heel strap.

Step	Action
1	Shut down the SpinServer. See “SpinServer Shutdown” on page 21 for the proper procedures.
2	When the SpinServer has been shut down, extend or remove the chassis from the rack. See “Access to the SpinServer Interior” on page 15.
3	Disconnect the power cables from both AC inlets and remove the SpinServer chassis cover.
4	Remove the pair of DIMMs from bank0 or bank1. The positions of bank0 and bank1 are marked on the motherboard.
5	Insert each replacement DIMM vertically into the DIMM slot. Align the notches along the bottom of the module with the slot.
6	Gently press down on the replacement DIMM until it is firmly in place in the slot.
7	Replace the cover of the SpinServer chassis and fasten the chassis cover thumbscrews.
8	Push the chassis into the rack and secure the chassis to the rack with the rack lock thumbscrews.

9.0 SpinServer PCI Adapters

This chapter provides information about replacing the SpinServer PCI adapters.

The PCI adapters are accessible from the interior of the SpinServer chassis.

Note: Before accessing the interior of the SpinServer chassis, see "Access to the SpinServer Interior" on page 15 for the procedures to extend or remove the chassis from the rack and remove the chassis cover.

Caution: The PCI adapters are not hot swappable. The SpinServer must be shut down prior to replacing the PCI adapters.

Warning: Always disconnect all power cords from all AC inlets of the system before removing or installing PCI adapters in the SpinServer.

9.1 Identifying the PCI Adapters

The PCI adapters are installed in numbered slots in the interior of the SpinServer chassis. The slots are numbered from the left to the right on the rear panel of the SpinServer chassis, with Slot 1 on the left as viewed from the rear of the chassis. The numbered slots have the following functions:

- **Slot 1:** UPS serial port (COM2)
- **Slot 2:** Fibre Channel ports 0 and 1
- **Slot 3:** Fibre Channel ports 2 and 3
- **Slot 4:** Network port (serv0)
- **Slot 5:** Network port (serv1)
- **Slot 6:** Cluster port (clus0)
- **Slot 7:** Cluster port (clus1)

9.2 Replacing the SpinServer PCI Adapters

To replace the PCI adapters, perform the following steps.

Important: The rack procedures described here apply only to legacy Spinnaker equipment racks. New SpinServer systems are installed in Network Appliance equipment cabinets and do not use rack slide assemblies. Contact Network Appliance Technical Support if you need assistance extending SpinServer system components from a Network Appliance equipment cabinet.

Caution: Do not unpack, install, or remove electronic equipment without using a properly grounded wrist or heel strap.

Step	Action
1	Shut down the SpinServer. See “SpinServer Shutdown” on page 21 for the proper procedures.
2	When the SpinServer has been shut down, extend or remove the chassis from the rack. See “Access to the SpinServer Interior” on page 15 for the proper procedures.
3	Disconnect the power cables from both AC inlets and remove the SpinServer chassis cover.
4	Remove the screw that fastens the PCI adapter to the rear panel of the chassis and vertically pull the failed PCI adapter from its slot.
5	Insert the replacement PCI adapter into the correct slot.
6	Gently press down on the replacement PCI adapter until it is firmly in place in the slot.
7	Replace the screw that fastens the PCI adapter to the rear panel of the chassis.
8	Replace the cover of the SpinServer chassis and push the chassis into the rack. Fasten the chassis cover thumbscrews.
9	Secure the chassis to the rack with the rack lock thumbscrews.

10.0 SpinServer Power Supplies

This chapter provides information about replacing the SpinServer power supplies. The power supplies are accessible from the front panel of the SpinServer chassis.

The SpinServer chassis has two active power supplies, PS1 and PS2. The third unit, PS3, is nonfunctional.

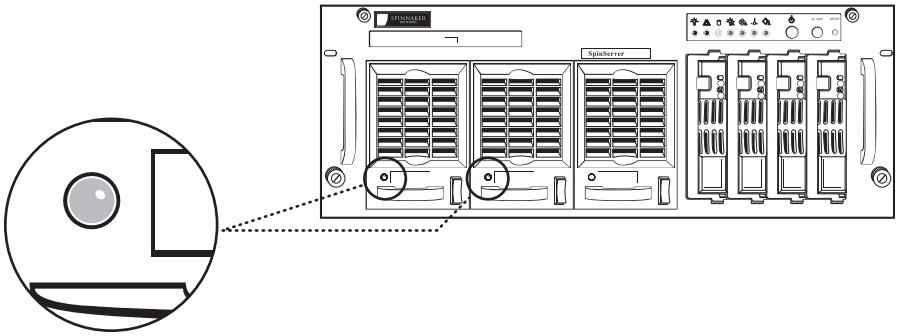

Figure 10-1. PS1 and PS2 are active power supplies.

10.1 Identifying Failed Power Supplies

Failed power supply units can be identified by checking the LEDs on the front panel on the SpinServer chassis and the LEDs on the individual power supply units. See the chapter “SpinServer Overview” on page 9 for additional information about the LEDs.

Front Panel LEDs on the SpinServer

The Power Fault LED on the front panel of the SpinServer is illuminated when a power supply unit fails.

Also, there is an audible alarm when AC power is absent from one power supply unit but the other power supply unit is operating normally. To suppress the audible alarm, press the ALARM button on the front panel.

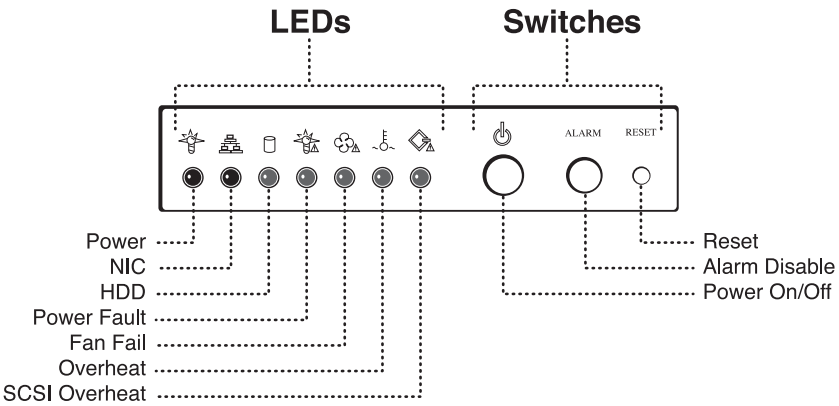

Figure 10-2. The LEDs and switches on the front panel of the SpinServer

Power Supply LEDs

As shown in Figure 10-1, each power unit has a single LED that can be illuminated either red or green or not be illuminated.

LED Green

When the power unit has AC power supplied to it and the SpinServer is powered on, the LED is green. This indicates that the unit is operating normally.

LED Red

A red LED is normal only when the system has been turned off and is not operating.

If the system is operating and the LED is red, it indicates one of the following problems:

- No power is being applied to that particular power supply unit. Before replacing the power supply unit, check to make sure that the power cord for that unit is plugged into both the power unit and a grounded wall outlet or power distribution unit (PDU).
- That particular power unit has failed.

LED Off

If both AC power cords are disconnected, the LEDs on both power supply units are not illuminated.

Note: If the AC power cord for one of the power supply units is disconnected, the LED is red for that power supply unit.

10.2 Replacing the SpinServer Power Supply Units

Note: The power supply units on the SpinServer chassis can be hot swapped. You do not need to power down the system to replace a failed power supply unit.

Important: Only one power supply unit can be replaced at a time.

When a power supply fails, replace the unit quickly to maintain system operations. To replace a power supply unit, perform the following steps:

Step	Action
1	Slide the locking tab up on the power supply unit. 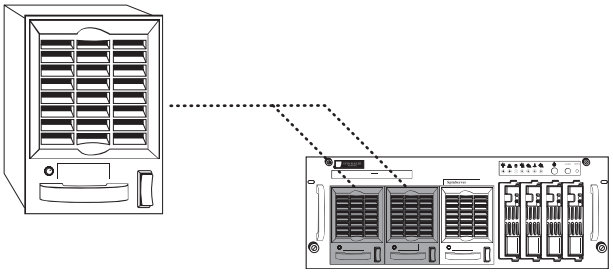 Figure 10-3. Replace a power supply unit. **Note:** The third power supply unit, PS3, is nonfunctional.
2	Using the power supply unit handle, pull the power supply unit out of the chassis.
3	Insert the new unit and push the locking tab down to ensure that the unit is fully inserted and secure in the chassis. The power supply LED is illuminated green when the power supply is fully operational.

11.0 SpinServer SCSI Disk Drives

This chapter provides information about replacing the SpinServer SCSI disk drives. The SpinServer has two active SCSI disk drives that contain the SpinFS software. The disk drives are configured as RAID 1 (mirrored).

The SCSI disk drives are accessible from the front panel of the SpinServer chassis. Each SCSI drive has two LEDs on the front of the drive carrier; the top LED is green and the bottom one is red.

Note: The leftmost SCSI drive slot is labeled Slot 0. The drives in Slot 0 and Slot 1 are active drives. The disk carriers in Slots 2 and 3 do not contain disk drives. The LEDs on the inactive drives are not illuminated.

11.1 Identifying Failed SCSI Disk Drives

When the green LED is illuminated, the drive is being accessed. When the red LED is illuminated, the SCSI drive has experienced a fault or has failed and must be replaced.

A faulty SCSI drive can be hot swapped. You do not need to power down the system to replace a failed SCSI drive.

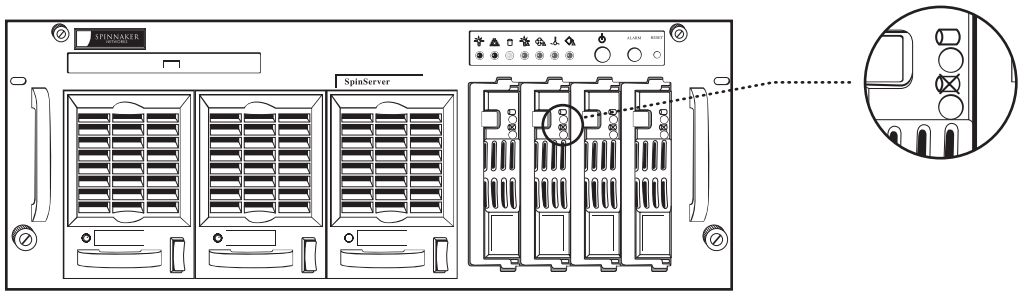

Figure 11-1. The SCSI drive carrier LEDs

11.2 Replacing the SpinServer SCSI Disk Drives

To replace a SCSI disk drive, perform the following steps:

Step	Action
1	From the front panel of the SpinServer, determine which of the two SCSI disk drives has failed.
2	Push the release button located beside the disk drive LEDs and swing the handle fully out.
3	Using the handle of the SCSI disk drive, slide the disk drive carrier out of the slot.
4	Using the handle, slide the replacement SCSI disk drive into the empty slot and insert it into the backplane.
5	Lock the disk drive in place by pushing the handle in until you hear a click.
6	Ensure that the replacement SCSI disk drive is fully inserted and secure in the chassis. The SCSI disk drive LEDs are illuminated green when the SCSI disk drives are fully operational.

12.0 SpinStor 200 Overview

This chapter provides information about the SpinStor 200 disk enclosure components that are field replaceable and the tools and equipment that you need to replace the components.

The SpinStor 200 disk subsystem consists of, at a minimum, one 16-disk Fibre Channel RAID enclosure. Additional 16-disk Fibre Channel JBOD enclosures can be daisy chained to the RAID enclosure.

Important: SpinStor 200 storage systems are used only with legacy SpinServer systems. New SpinServer systems use FAS270c (RAID) and DS14mk2 (JBOD) disk enclosures. See the *FAS270/270c Hardware and Service Guide* and the *Fibre Channel DiskShelf14 Hardware Guide* for information on servicing the FAS270c and DS14mk2, respectively.

Note: You must purchase all field replaceable units from Network Appliance or an authorized reseller.

12.1 Field-Replaceable Units

The SpinStor 200 is designed for easy access to FRUs so that you can remove and install units in the field. The units are accessible from the front and back panels of the SpinStor 200 disk enclosures.

Replaceable Units

The SpinStor 200 FRUs are identical for the RAID and JBOD enclosures, with the exception of I/O modules. The RAID enclosure includes two RAID I/O modules, and the JBOD enclosure includes two JBOD I/O modules.

RAID Enclosure FRUs

The following units can be individually replaced in the SpinStor 200 RAID disk enclosures. The disk drives are accessible from the front panel of the SpinStor 200 enclosure. The others are accessible from the rear panel of the SpinStor 200 enclosure.

- Disk drives
- Power supplies/cooling modules
- RAID I/O modules
- Fiber SC small form-factor pluggable (SFP) gigabit interface converter (GBIC)
- Copper SFP GBIC
- SC optical cables

JBOD Enclosure FRUs

The following units can be individually replaced in the SpinStor 200 JBOD disk enclosures. The disk drives are accessible from the front panel of the SpinStor 200 enclosure. The others are accessible from the rear panel of the SpinStor 200 enclosure.

- Disk drives
- Power supplies/cooling modules
- JBOD I/O modules
- Operator panel
- Copper cables with integrated GBIC

12.2 Tools and Equipment

To replace FRUs, you need the following tools and equipment:

- Phillips screwdrivers (#0, #1, and #2)
- Antistatic wrist strap and grounding leash

12.3 SpinStor 200 LEDs and Fault Indicators

The LEDs and fault indicators provide information about the operational status of specific components in the SpinStor 200 RAID and JBOD enclosures.

SpinStor 200 RAID and JBOD Front Panel LEDs

The following illustration shows the location of the status indicators on the front panel of each disk carrier for the RAID and JBOD disk enclosures.

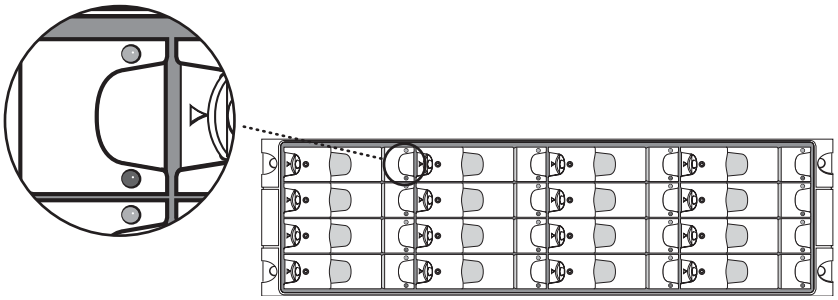

Figure 12-1. The front panel LEDs on the SpinStor 200 RAID or JBOD

SpinStor 200 RAID Back Panel LEDs

The SpinStor 200 RAID back panel LEDs are detailed in the following illustration.

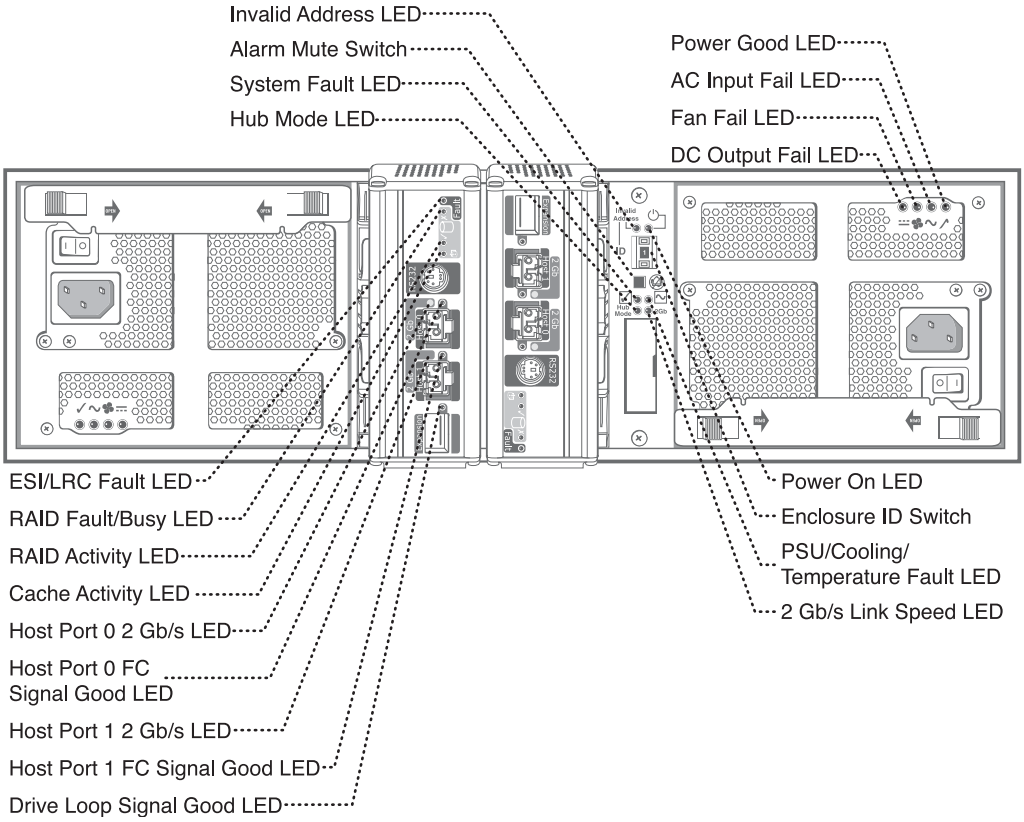

Figure 12-2. SpinStor 200 RAID back panel LEDs

SpinStor 200 JBOD Back Panel LEDs

The SpinStor 200 JBOD back panel LEDs are detailed in the following illustration.

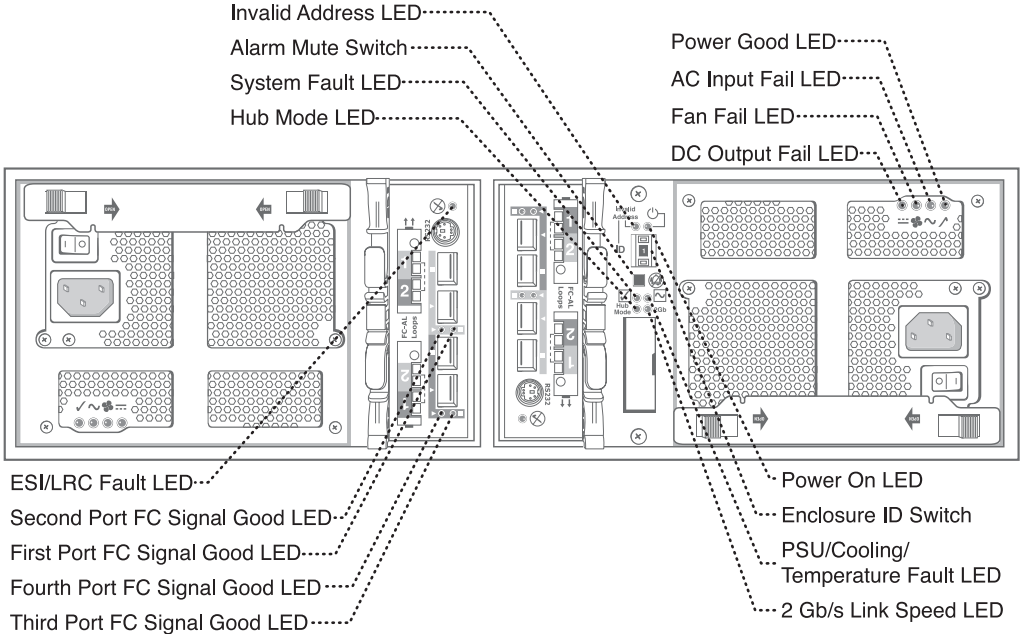

Figure 12-3. SpinStor 200 JBOD back panel LEDs

13.0 SpinStor 200 Disk Drives

This chapter provides information about replacing the SpinStor 200 RAID and JBOD disk drives. The disk drives are accessible from the front panel of the SpinStor 200 RAID and JBOD enclosures.

Important: SpinStor 200 enclosures are used only with legacy SpinServer systems. New SpinServer systems use FAS270c (RAID) and DS14mk2 (JBOD) disk enclosures. See the *FAS270/270c Hardware and Service Guide* and the *Fibre Channel DiskShelf14 Hardware Guide* for information on servicing the FAS270c and DS14mk2, respectively.

13.1 Identifying Failed Disk Drives

A green LED on an individual disk drive indicates normal disk operation. A yellow LED on an individual disk drive indicates failure of that disk. The disk drive needs to be replaced.

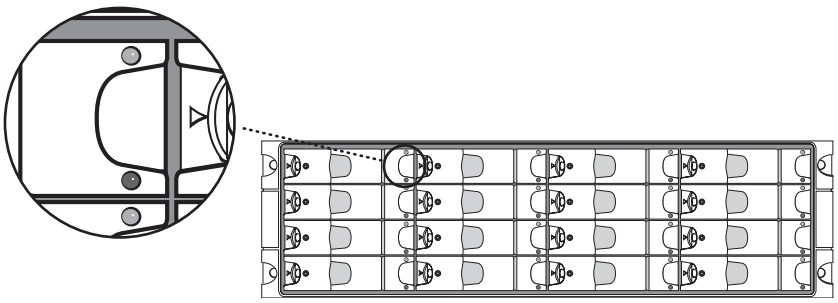

Figure 13-1. Disk drive LED

13.2 Replacing the SpinStor 200 Disk Drives

Before physically removing a SpinStor 200 RAID or JBOD disk drive, you must alert the RAID subsystem that you are removing the disk by using one of the following methods:

- Use the SpinManager CLI **`raid diskdrives prepareforremoval`**

command.

- In the SpinManager GUI, navigate to **RAID → Disk Drives**. A table listing all the disk drives in your RAID subsystem is displayed. Select the failed disk from the listing and select **Prepare For Removal**. Click **Submit**.

Caution: Do not unpack or install disk drives without using a properly grounded wrist or heel strap. Failure to do so can result in ESD damage that causes equipment failure.

Note: The disk drives can be hot swapped. You do not need to power down the system to replace a disk drive in the RAID or JBOD disk enclosures.

To replace a disk drive in either a RAID or JBOD disk enclosure, follow these steps:

Step	Action
1	Unlock the disk drive canister by using the torque wrench provided with the disk enclosure.
2	Remove the disk drive canister from the enclosure by pulling the canister handle out, as shown below. 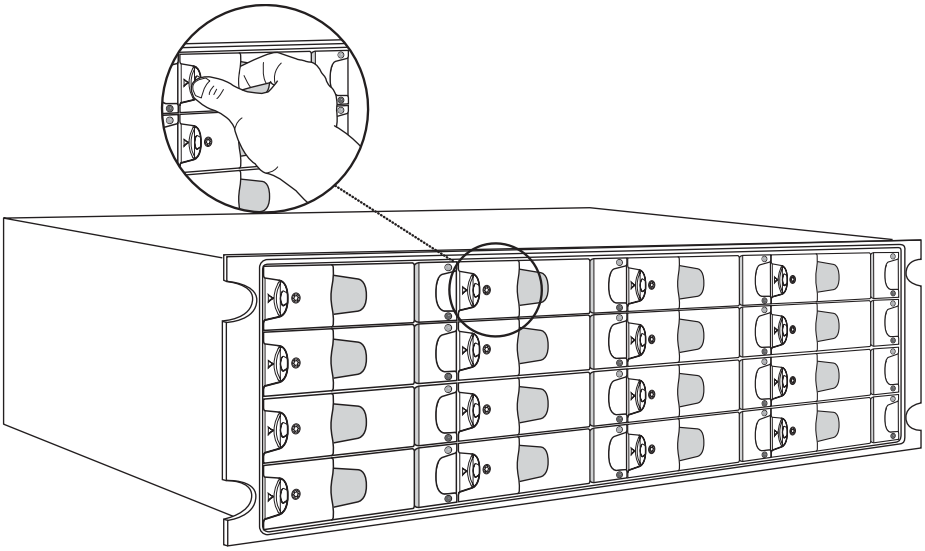 Figure 13-2. Removal of disk drive canister from RAID or JBOD enclosure
3	Insert the new disk drive canister by sliding it into the enclosure slot.

Step	Action
4	Ensure that the canister is properly seated and fully secure in the slot by placing the handle in the closed position. 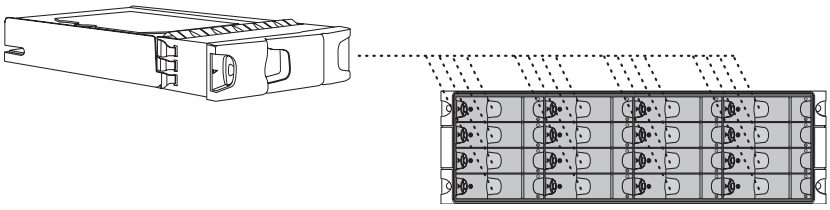 Figure 13-3. Replacement of disk drive canister
5	Lock the disk drive canister by using the torque wrench.

14.0 SpinStor 200 GBICs

This chapter provides information about replacing the SpinStor 200 RAID and JBOD small form pluggable (SFP) Gigabit Interface Converters (GBICs). The GBICs are accessible from the rear panel of the SpinStor 200 enclosures.

The SpinStor 200 RAID and JBOD disk chassis contain fibre and copper GBICs for cable connectivity. The RAID enclosure contains fibre GBICs in the Host 0 and Host 1 ports and a copper GBIC in the Expansion port.

Important: SpinStor 200 enclosures are used only with legacy SpinServer systems. New SpinServer systems use FAS270c (RAID) and DS14mk2 (JBOD) disk enclosures. See the *FAS270/270c Hardware and Service Guide* and the *Fibre Channel DiskShelf14 Hardware Guide* for information on servicing the FAS270c and DS14mk2, respectively.

14.1 Identifying Failed GBICs

GBICs do not have any visual indicators for failure. If you suspect that a GBIC is not properly functioning, replace it.

14.2 Replacing the SpinStor 200 GBICs

When a GBIC fails in a RAID or JBOD disk enclosure, replace the unit quickly.

Note: The GBICs can be hot swapped. You do not need to power down the system to replace GBICs in the RAID or JBOD disk enclosures.

Note: Before removing and replacing a GBIC, if the attached storage pool is not configured for high availability (HA), it must be taken offline by using one of the following methods:

- Use the SpinManager CLI **`storage pools setoffline`** command.
- Use the SpinManager GUI to navigate to **Storage Pools → Storage Pools**. A table listing all storage pools is displayed. Select the storage pool to be taken offline from the

listing and select **Take Offline** from the drop-down menu. Click **Submit**.

Note: You must check with the system administrator to verify that the attached storage pools are offline before removing and replacing the GBIC.

Replacing a Fibre GBIC

To replace a fibre GBIC, follow these steps:

Step	Action
1	Disconnect the Fibre Channel cable that is connected to the GBIC.
2	Grasp and squeeze the black tab on the side of the GBIC, then pull the GBIC out of the slot.
3	Insert the GBIC into the slot until it locks in place. The GBICs are designed for insertion into the I/O module. Do not force the GBIC into the slot.
4	Connect the Fibre Channel cable to the new GBIC.

Replacing a Copper GBIC

To replace copper GBIC, follow these steps:

Step	Action
1	Pull the GBIC and attached cable out of the slot.
2	Insert the GBIC and attached cable into the slot until it locks in place. The GBICs are designed for insertion into the I/O module. Do not force the GBIC into the slot.

15.0 SpinStor 200 I/O Modules

This chapter provides information about replacing the SpinStor 200 RAID and JBOD I/O modules. The I/O modules are accessible from the rear panel of the SpinStor 200 RAID and JBOD enclosures.

Important: SpinStor 200 enclosures are used only with legacy SpinServer systems. New SpinServer systems use FAS270c (RAID) and DS14mk2 (JBOD) disk enclosures. See the *FAS270/270c Hardware and Service Guide* and the *Fibre Channel DiskShelf14 Hardware Guide* for information on servicing the FAS270c and DS14mk2, respectively.

15.1 Identifying Failed I/O Modules

During normal system operations, the yellow Fault LED is illuminated if the controller has failed and needs to be replaced.

Note: During the initial setup process of the SpinServer system components, it is recommended that you wait for the Fault LED to darken before powering on the SpinServer. This assures that the RAID controllers are properly initialized and are ready to communicate with the SpinServer. After the SpinStor 200 RAID is powered on, it takes several minutes for the RAID controllers to be initialized. The Fault LED remains yellow during this process.

If the Fault LED remains on during the setup process, you must check the I/O modules or RAID controllers to ensure that they are secure and properly seated in the SpinStor 200.

If the problem persists after the RAID controllers or JBOD I/O modules are properly seated in the enclosure, the module must be replaced.

15.2 Replacing the SpinStor 200 I/O Modules

When an I/O module fails, replace it quickly.

Important: Only one I/O module can be replaced at a time in a RAID or JBOD disk enclosure.

Note: The I/O modules of the SpinStor 200 RAID and JBOD enclosures can be hot swapped. You do not need to power down the system to replace an I/O module in the RAID or JBOD disk enclosures.

Replacing the RAID I/O Modules

To replace an I/O module in a RAID disk enclosure, perform the following steps:

Step	Action
1	Remove all GBICs and cables from the module.
2	Squeeze together the ends of the latches on the I/O module.
3	Pull the module from the SpinStor 200 RAID enclosure. 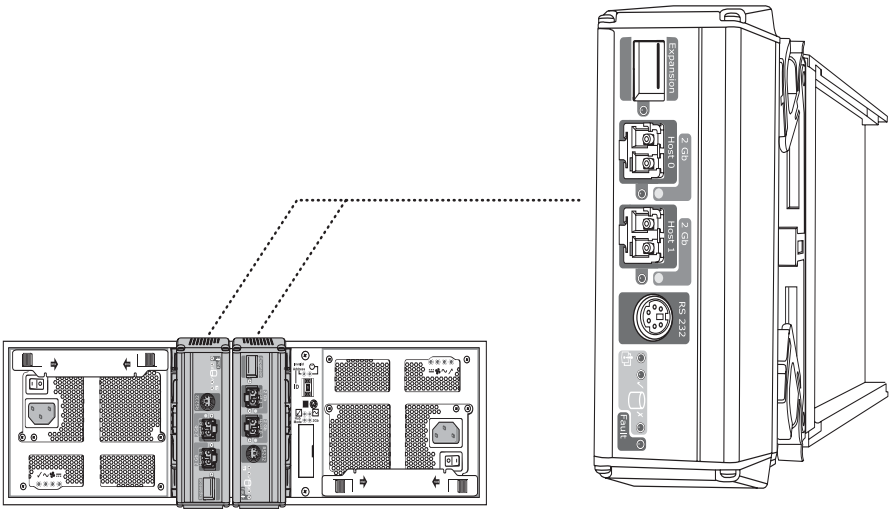 Figure 15-1. Replace a RAID I/O module.
4	Slide the new module into the slot until the module engages. Ensure that it is properly seated.
5	Push down the two latches to secure the I/O modules into the disk enclosure.

Important: The battery on the RAID I/O module is not field replaceable. If the battery on a RAID I/O module fails, the entire module must be replaced.

Replacing the JBOD I/O Modules

To replace an I/O module in a JBOD disk enclosure, perform the following steps:

Step	Action
1	Remove all GBICs and cables from the module.
2	Squeeze together the ends of the latches on the I/O module.
3	Pull the module from the SpinStor 200 JBOD enclosure. 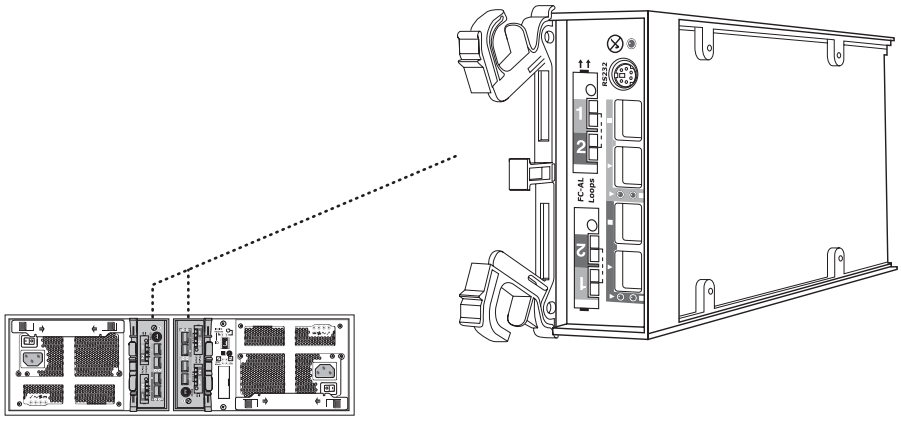 Figure 15-2. Replace a JBOD I/O module.
4	Slide the new module into the slot until the module engages. Ensure that it is properly seated.
5	Push down the two latches to secure the I/O modules into the disk enclosure.

16.0 SpinStor 200 Power Supply Units

This chapter provides information about replacing the power supply units for the SpinStor 200 RAID and JBOD disk enclosures. The power supply units are accessible from the rear panel of the SpinStor 200 enclosures. The power supply units provide both power and cooling to the SpinStor 200 disk enclosure.

Important: SpinStor 200 enclosures are used only with legacy SpinServer systems. New SpinServer systems use FAS270c (RAID) and DS14mk2 (JBOD) disk enclosures. See the *FAS270/270c Hardware and Service Guide* and the *Fibre Channel DiskShelf14 Hardware Guide* for information on servicing the FAS270c and DS14mk2, respectively.

16.1 Identifying Failed Power Supply Units

If the PSU/Cooling/Temperature Fault LED on the operator panel is illuminated yellow, it indicates one of the following conditions:

- Power is not being supplied by the power supply unit.
- The power supply unit in an operating enclosure is turned off at the switch.
- The AC power in an operating enclosure is removed from a power supply unit.
- There is a problem with the fans.
- The temperature is too high or too low.

If the PSU/Cooling/Temperature Fault LED on the power supply unit is illuminated yellow, verify the following:

- All power supply power cords are properly plugged into the power distribution unit (PDU).
- The PDU is plugged into a grounded wall outlet and switched on.
- The power supply unit is switched on.
- The circuit breaker on the PDU is not tripped.
- The cooling fans are operating.
- The ambient temperature is within operating limits.

If these conditions are met and the PSU/Cooling/Temperature Fault LED on the power supply is still illuminated yellow, replace the power supply unit.

16.2 Replacing the SpinStor 200 Power Supply Units

When a power supply unit fails in a RAID or JBOD disk enclosure, replace the unit quickly.

Note: The power supplies can be hot swapped. You do not need to power down the system to replace a power supply in the RAID or JBOD disk enclosures.

Important: Only one power supply unit can be replaced at a time in a RAID or JBOD disk enclosure.

Warning: The power supply units for SpinStor 200 products have detachable power cords. Disconnect the power cord at the power supply unit before removing the power supply unit from the enclosure. When installing a power supply unit, insert the power supply unit into the enclosure before connecting the power cord.

To replace a power supply unit in either a RAID or JBOD disk enclosure, perform the following steps:

Step	Action
1	Switch off the affected unit and remove the power cord that is attached to the failed power supply unit.
2	Squeeze together the two latches on the power supply unit's handle and pull up the handle. 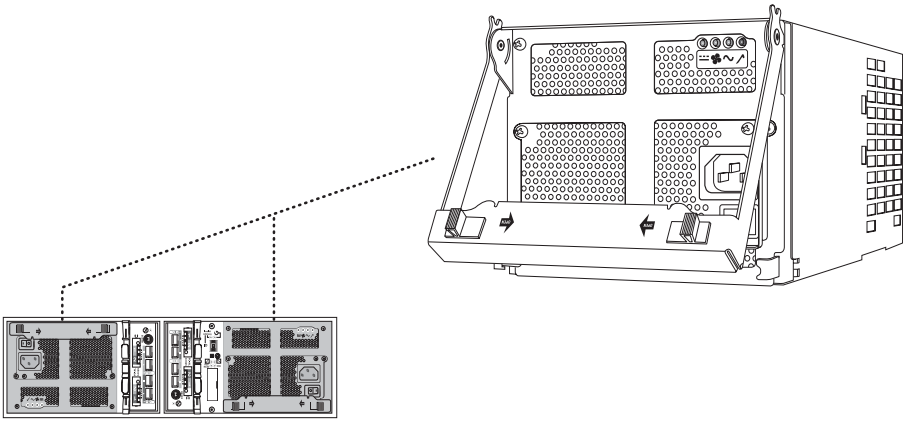 Figure 16-1. Replace a power supply unit.
3	Using the power supply unit handle, pull the power supply out of the enclosure.
4	Slide the new power supply unit into the enclosure and push down the handle until a click indicates that the handle latches are engaged.

Step	Action
5	Attach the power cord to the replacement power supply unit and turn it on with the switch.

17.0 UPS

This chapter provides information about replacing the UPS. The SpinServer can be connected to a 120-volt UPS, a 208-volt UPS, or a UPS with another voltage. Check with your Network Appliance sales representative on the availability of a UPS for your voltage requirements.

You must connect the SpinServer to a UPS to protect the nonvolatile RAM (NVRAM). Each SpinServer in the system must be connected to an individual UPS. Do not plug any other system equipment into the UPS that is connected to a SpinServer.

17.1 Identifying the Failed UPS

When the UPS is supplying utility power to the connected SpinServer, the online LED is illuminated. During on-battery operation, the on-battery LED is illuminated. If neither the online LED or the on-battery LED is illuminated, one of the following has occurred:

- The battery needs to be replaced.
- The battery need to be recharged.
- The input voltage from your electrical utility is extremely low.
- The UPS has failed.

If the battery is functioning normally and the utility input voltage is in the normal and adequate range, the UPS has failed and must be replaced.

Note: If the UPS battery has failed, the UPS must be replaced. The UPS battery is not an FRU.

To check the battery and the utility input voltage, follow the procedures described in this section.

Checking the UPS Battery

The 120-volt and the 208-volt UPS perform a self-test of the battery when initially powered on. The self-test is automatically performed every two weeks thereafter. During the self-test, the UPS briefly operates the system equipment that is connected to it on battery power. If the UPS passes its self-test, the system equipment is returned to online operation.

If the UPS battery fails the self-test, the UPS emits an alarm of short beeps for one minute, and the Replace Battery LED is illuminated. (The UPS repeats the alarm every five hours.) The UPS immediately returns the system equipment to online operation. The connected equipment is not affected by a failed self-test by the UPS.

Note: If the Replace Battery LED flashes, the battery is disconnected.

Note: To manually perform a self-test, press and hold the **On** button on the front panel of the UPS for a few seconds.

Recharging the Battery

The battery needs to be recharged if it fails a self-test or if battery exhaustion occurs because of continuous use.

Failed Self-Test

When the UPS fails a self-test, recharge the battery for 24 hours and perform another self-test. If it fails the self-test again, the battery must be replaced.

Continuous Use

When the UPS operates for an extended length of time on battery power and the energy reserve of the battery runs low, the UPS beeps continuously (by default) until the UPS shuts down from battery exhaustion or returns the system equipment to normal online operation.

Recharge the battery for 24 hours and perform a self-test. If it fails the self-test, the battery must be replaced.

Assessing Low Voltage

To determine if the UPS has failed because of extremely low voltage from your electrical utility, follow these steps:

1. Ensure that the UPS is plugged into AC inlets.

2. Press and hold the **On** button to view the **Utility Voltage** bar graph on the right side of the front panel of the UPS.

After a few seconds, the **Utility Voltage** bar graph LEDs display the input voltage. If no LEDs are illuminated when the UPS is plugged into AC inlets, the line voltage is extremely low.

Important: If all five of the **Utility Voltage** bar graph LEDs are illuminated, the input voltage is extremely high and must be checked by an electrician.

17.2 Tools and Equipment

To replace a UPS, you need the following tools and equipment:

- Flat-blade screwdriver
- Antistatic wrist strap and grounding leash
- Mechanical assistance is required to remove the 208-volt UPS from the equipment rack.

17.3 Replacing the UPS

When replacing the 120-volt UPS, follow this safety guideline.

Warning: The 120-volt UPS chassis requires at least two people to lift and handle the chassis. When lifting the chassis, handle it in such a way that the weight is evenly distributed and stabilized. Follow national or regional safety standards when lifting or repositioning any SpinServer system components.

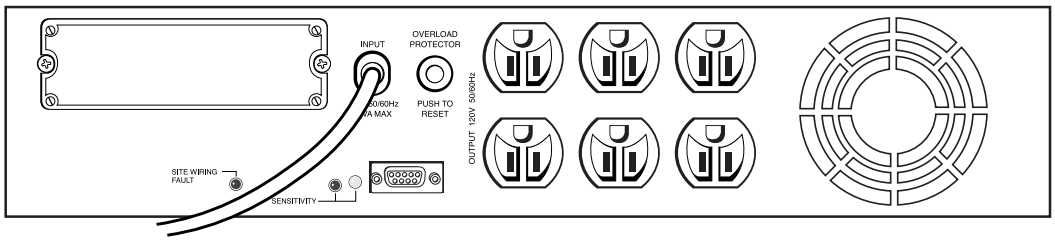

Figure 17-1. Rear view of the 120-volt UPS

When replacing the 208-volt UPS, follow this safety guideline.

Warning: The 208-volt UPS chassis requires mechanical assistance to lift and handle the chassis. When lifting the chassis with mechanical assistance, handle it in such a way that the weight is evenly distributed and stabilized. Follow national or regional safety standards when lifting or repositioning any SpinServer system components.

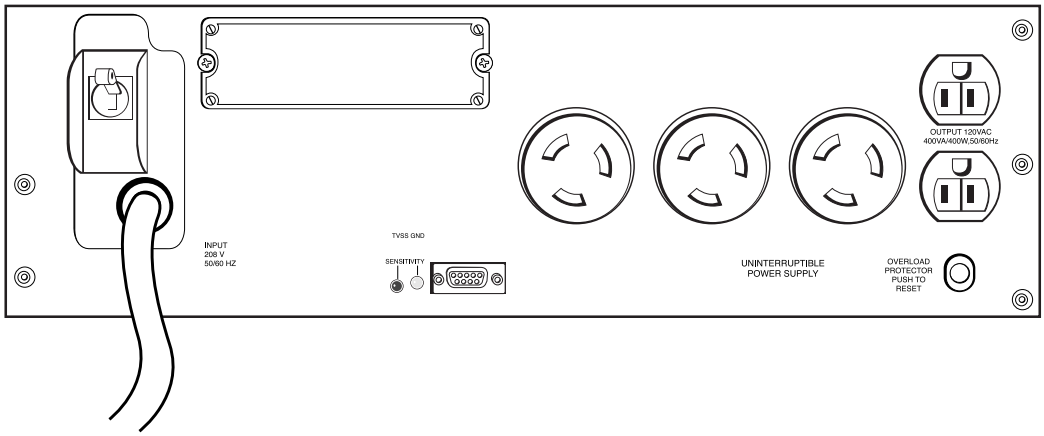

Figure 17-2. Rear view of the 208-volt UPS

Note: If the UPS battery is functioning normally, it can be reused in the replacement UPS.

Note: Before beginning the procedure to replace the UPS, disconnect the SpinServer power cords from the rear panel of the UPS.

To replace a UPS, perform the following steps:

Step	Action
1	Shut down the SpinServer. See “SpinServer Shutdown” on page 21 for the proper procedures.
2	Disconnect the serial cable from the SpinServer COM2 port. 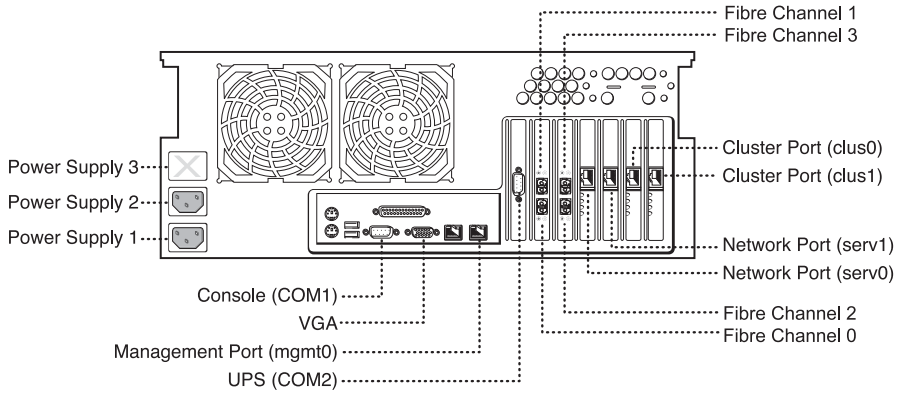 Figure 17-3. SpinServer serial cable is disconnected from the COM2 port.
3	Disconnect the power cord from the SpinServer.
4	Turn off the power for the UPS by pressing and releasing the lower **O** button.
5	Unplug the power cord to the UPS.

Step	Action
6	Remove the UPS front bezel by grasping the curved section on each side of the bezel and pulling the bezel toward you.
7	Disconnect the UPS battery. On the 120-volt UPS, grasp the white cord attached to the battery leads and firmly pull the cord toward you. On the 208-volt UPS, perform the following steps: a. Use a flat-blade screwdriver to remove the two battery door screws. b. Open the battery door. c. Disconnect the battery leads by grasping the battery connector, and firmly pull the battery connector toward you. d. Close and secure the battery door by replacing the screws.
8	With two people working together, remove the UPS from the equipment rack. Set the failed UPS aside.
9	With two people working together, install the replacement UPS into the equipment rack.
10	Connect the battery leads to the battery pack, which is to the right of the battery door and slightly recessed. Connect the red wire to the positive (+) terminal and the black wire to the negative (-) terminal.
11	Push firmly until the connector snaps together. **Important:** Small sparks at the battery connectors are normal during reconnection of the wires.
12	Plug the UPS power cord back into the power source.
13	Replace the front bezel onto the front panel.
14	Reconnect the UPS serial cable to the SpinServer COM2 port, and connect the SpinServer power cord.
15	Turn on the UPS by pressing and releasing the **| Test** button. The UPS performs a self-test when powering up. 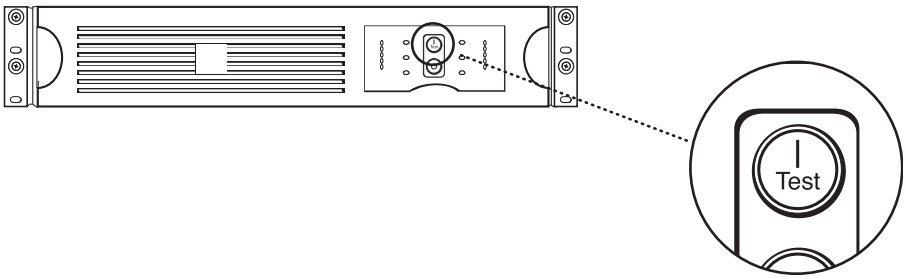 Figure 17-4. Press the **|Test** power button on the 120-volt UPS.

Step	Action
16	Restart the SpinServer.

18.0 AC Transfer Switches

This chapter provides information on replacing the AC transfer switch (ATS). In legacy SpinServer systems, each UPS is connected to an ATS of corresponding voltage; for instance, a 120-volt UPS must be connected to a 120-volt ATS. The UPS can be connected to a 120-volt ATS, a 208-volt ATS, or an ATS with another voltage.

Each UPS must be connected to an ATS to protect the SpinServer's NVRAM. Do not plug any equipment other than the UPS into the ATS.

Important: AC transfer switches are used only with legacy SpinServer systems. They are not provided with new SpinServer systems.

18.1 Identifying the Failed ATS

When the ATS is supplying utility power to the connected UPS, the Status and AC Source LEDs on the front panel of the ATS are illuminated. If these LEDs are not illuminated, one of the following has occurred:

- The input from the utility power has failed.
- The ATS has failed.

If the utility power is functioning normally, the ATS has failed and must be replaced.

18.2 Replacing the ATS

The rear view of the 120-volt ATS is shown in the following figure.

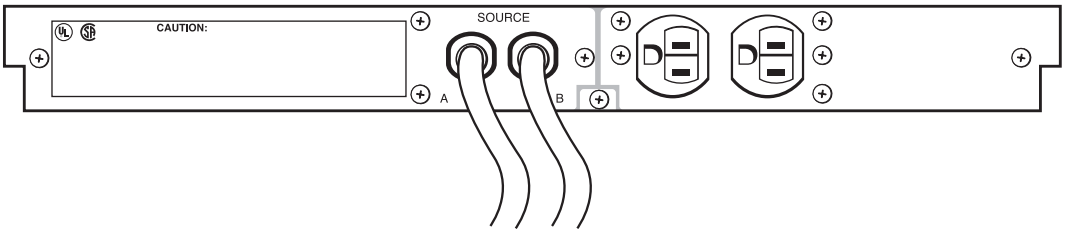

Figure 18-1. Rear view of the 120-volt UPS

The rear view of the 208-volt ATS is shown in the following figure.

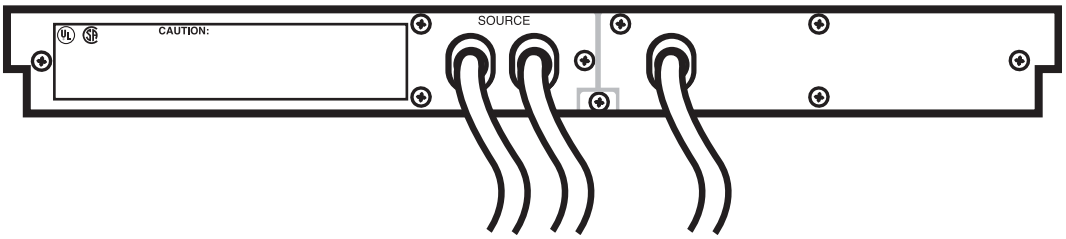

Figure 18-2. Rear view of the 208-volt ATS

To replace the ATS, perform the following steps:

Step	Action
1	Shut down the SpinServer. See “SpinServer Shutdown” on page 21 for the proper procedures.
2	Turn off the power for the UPS by pressing and releasing the lower **O** button.
3	Disconnect the power cord to the UPS.
4	Unplug the ATS’s power cords.
5	Remove the failed ATS from the equipment rack and set it aside.
6	Install the replacement ATS into the equipment rack.
7	Plug in the replacement ATS’s power cords.
8	Reconnect the power cord to the UPS.
9	Turn on the UPS by pressing and releasing the **`|Test`** button.
10	Restart the SpinServer.

19.0 Appendix A: Field Replaceable Units

This appendix provides descriptions of the FRUs.

19.1 SpinServer FRUs

The following table lists the SpinServer FRUs. Contact Network Appliance Technical Support for assistance in obtaining the part number for an FRU.

Table 19-1. SpinServer FRUs

FRU Description
1-GB DIMM memory module (128MX72, CL2, PC133)
Null modem serial cable (DB9F TO DB9F, 10 ft., shielded)
10/100/1000 network interface adapter (copper interface)
Fibre Channel adapter, 2.125 Gb/s, ISP 2312, 133 PCIX, duplex LC 850 nm
Rear exhaust fan assembly for SS4100 (hot swappable)
Front intake fan assembly for SS4100 (hot swappable)
SpinServer AC power supply (hot swappable)
36.7 GB/10k RPM SS4100 integral ULTRA SCSI disk drive assembly with carrier
Spare SpinServer 4100 chassis w/ motherboard/2X 2.8GHz P4 only

19.2 SpinStor 200 FRUs

The following table lists the SpinStor 200 FRUs. Contact Network Appliance Technical Support for assistance in obtaining the part number for an FRU.

Table 19-2. SpinStor 200 FRUs

FRU Description
Spare SpinStor 200 JBOD/RAID chassis with operator control panel
RAID module assembly, FFx-2/256MB Cache
JBOD I/O module
450W AC power supply and blower assembly
Seagate 146GB/10k RPM drive-in-carrier assembly
LC optical SFP module
Cable, Fibre Channel, optical, 3 m, LC-LC
SFP-to-SFP patch cable, 1 m

19.3 UPS FRUs

The following table lists the UPS FRUs. Contact Network Appliance Technical Support for assistance in obtaining the part number for an FRU.

Table 19-3. UPS FRUs

FRU Description
120 VAC UPS - 1000VA/670W out, 1X 6-ft.input cord w/NEMA 5-15P nonlocking plug
208 VAC UPS - 3000VA/2250W out, 1X 6-ft.input cord w/NEMA L6-20P locking plug
230 VAC UPS - 1000VA/670W out, 1X IEC60320-C14 inlet

19.4 ATS FRUs

The following tables lists the AC transfer switch FRUs. Contact Network Appliance Technical Support for assistance in obtaining the part number for an FRU.

Table 19-4. ATS FRUs

FRU Description
AC transfer switch, automatic, 120 VAC 50-60 Hz in/out, 12-Amp rating, 2X 6-ft.NEMA 5-15P input
AC transfer switch, automatic, 208 VAC 50-60 Hz in/out, 16-Amp rating, 2X 6-ft. NEMA L6-20P input
AC transfer switch, automatic, 230 VAC 50-60 Hz in/out, 10-Amp rating, 2X IEC60320-C14 input

20.0 Glossary

CIFS - The Common Internet File System is a protocol that defines a standard for client systems to request file services from server systems over a network. CIFS is based on the Standard Server Message Block (SMB) protocol, which is widely used by personal computers and workstations running a vast variety of operating systems.

CIM - The Common Information Model is an object-oriented model that provides a conceptual framework for describing management data.

COM 1 - COM 1 is the name of the serial communications port on the SpinServer that is used to access the command line interface of the SpinServer.

COM 2 - COM 2 is the name of the serial communications port on the SpinServer that is used to attach the SpinServer to the UPS.

DIMM - A Dual In-line Memory Module is a small circuit board that holds memory chips.

CLI - The command line interface is the command version of the SpinServer management interface software.

FC - Fibre Channel is a set of standards, completely developed through industry cooperation, for a serial I/O bus capable of transferring data between two ports at up to 100 MB/second. Fibre Channel supports point-to-point, arbitrated loop, and switched topologies.

Gb - Gigabit is a unit of measure for data transfer rates between two entities on a network. In this context, it refers to one billion bits. Network data transfer rates are often measured in gigabits per second (Gbps).

GB - Gigabyte is a unit of measure for data storage on computer systems. One gigabyte (GB) is equal to 1,024 megabytes (MB).

GBICs - Gigabit Interface Converters are transceivers that convert between electrical signals used by host bus adapters (and similar Fibre Channel and Ethernet devices) and either electrical or optical signals suitable for transmission.

GbE - Gigabit Ethernet is a group of Ethernet standards in which data is transmitted at 1 Gb per second.

GUI - The Graphical User Interface is the graphical browser version of the SpinServer management interface software.

HBA - Host Bus Adapter is an I/O adapter that connects a host I/O bus to a computer's memory system.

HTML - Hypertext Markup Language is the authoring language used to create documents that can be displayed on a web browser page.

ICMP - Internet Control Message Protocol is an extension to the Internet Protocol (IP). ICMP supports packets containing error, control, and informational messages.

inode - Inodes are data structures that contain information about files in UNIX file systems. In the file system where each file resides, each file has an inode and is identified by an inode number (i-number). Inodes provide information on files, including user and group ownership, access mode (read, write, or execute permissions) and type. Inodes are created when a file system is created. There are a set number of inodes, which indicates the maximum number of files the system can hold. A file's inode number can be found using the **`ls -i`** command. The **`ls -l`** command retrieves inode information.

I/O - Input/Output is used to describe any program, operation or device that transfers data between a computer and a peripheral device.

IP - Internet Protocol specifies the format of packets (datagrams) and the addressing scheme. Most networks combine IP with a higher-level protocol, such as TCP or UDP, which establishes a virtual connection between a destination and a source.

JBOD - Just a Bunch of Disks is a storage subsystem using multiple independent disk drives that are not configured according to the RAID system. The expansion disk enclosure in a SpinServer system is a JBOD enclosure.

Kerberos - Kerberos is a network authentication protocol developed at the Massachusetts Institute of Technology. Kerberos uses encryption keys to provide authentication for client/server applications. Authentication provides verification of a user's or process's identity to a server. See also **principal**, **SPN (Service Principal Name)**.

LED - A light-emitting diode is an electronic device that lights up when electricity is passed through it.

Mb - Megabit is a unit of measure for a volume of data storage. 1 Mb = 1,024 kilobits (Kb). It is also used to describe data transfer rates on a network. In this context, it refers to one million bits. Networks are often measured in megabits per second (Mbps).

MB - Megabyte is a unit of measure for data storage on computer systems. One megabyte is equal to 1,048,576 (2 to the 20th power) bytes of data.

MHz - Megahertz is the unit of measurement of the speed of microprocessors, called the clock speed. One MHz represents one million cycles per second.

NDMP - Network Data Management Protocol defines a common architecture for the way heterogeneous file servers on a network are backed up. The protocol allows the creation of a common agent used by the central back-up application to back up different file servers running different platforms and platform versions.

NICs - Network Interface Cards are expansion boards that enable network connections for a PC or server.

NIS - Network Information Service provides a simple network lookup service consisting of databases and processes. Its purpose is to provide information that needs to be available to the entire network, such as login names, passwords, home directories, and group information.

NIS+ - Network Information Service Plus was designed to address security problems that NIS cannot address. (There is no relation between NIS+ and NIS. The commands and the overall structure of NIS+ are different from NIS.) NIS+ increases security by using an additional authentication method. Users have a standard login password, which gives them access to the system, and an additional secure or network password.

NFS - Network File System is a client/server application that allows all network users to access shared files stored on computers of different types.

NTLM - NetLanMan is an authentication mechanism used by CIFS.

NVRAM - Non-Volatile Random Access Memory is a type of memory that retains its contents when the power is turned off.

PDF - Portable Document Format is a file format developed by Adobe Systems that provides an electronic photocopy of a document. PDF captures formatting information from a variety of desktop publishing applications, making it possible to send documents electronically and have them appear on the recipient's monitor, or in printed form, as the writer intended the documents to appear. To view a file in PDF format, you need Adobe Acrobat Reader, a free application distributed by Adobe Systems.

PDU - Power Distribution Units are appliances that provide power connections to system components with high voltage requirements.

Principal - In Kerberos, a principal is a unique identity to which Kerberos can assign tickets. An example Kerberos principal is **susan/admin@SECURITY.EXAMPLE.COM**.

RAID - Redundant Array of Independent Disks is a disk enclosure with RAID controllers. The SpinServer supports RAID levels 0, 1, 3, 5, and 0+1. A RAID set is a group of disks in which the disks independently operate, the data strip size is no smaller than the exported block size, and parity check data is distributed across the array's disks.

SCSI - Small Computer System Interface is a parallel interface standard used by computer systems for attaching peripheral devices, such as disk drives and printers.

SES - The SCSI Enclosure Services manager reports the operational status of disk drives to the RAID controllers.

SNMP - The Simple Network Management Protocol is a protocol for monitoring and managing devices on a network.

SP - A Storage Pool is the logical view, as it appears to users, of the compartmentalization of physical storage disks.

SPN - In Kerberos, a Service Principal Name is the name by which a client uniquely identifies an instance of a service.

SSH - Secure Shell is a program used to log into another computer over a network to securely execute commands from a remote machine, and to move files from one machine to another. It was developed by SSH Communications Security Ltd.

TCP - Transmission Control Protocol is a transport protocol. Where the UDP protocol handles only packets, TCP enables two hosts to establish a connection and exchange streams of data. TCP is more reliable than UDP, but slower.

U - U specifies one unit of height in an equipment rack. 1 U = 1.75 inches = 4.45 cm.

UDP - User Datagram Protocol is a connectionless protocol that runs on top of IP networks, as does TCP. Unlike TCP, UDP provides very few error recovery services, offering instead a direct way to send and receive datagrams over an IP network. It is used primarily for broadcasting messages over a network. UDP is faster than TCP, but less reliable.

UPS - An Uninterruptible Power Supply is an appliance that provides power security, with battery power, in the event of a power failure.

VFS - A Virtual File System is the primary unit of data storage in the SpinServer system.

WINS - The Windows Internet Naming Service supports network clients and servers running Windows operating systems. WINS uses a distributed database that is automatically updated with the names of computers currently available on a Windows Network and the IP address assigned to each one. The SpinServer has the ability to register its CIFS servers with the WINS servers that are defined in the SpinServer system.