# SpinServer® 4100
# **Installation Guide**

Network Appliance, Inc.
495 East Java Drive
Sunnyvale, CA 94089 USA
Telephone: +1 (408) 822-6000
Fax: +1 (408) 822-4501
Support telephone: +1 (888) 4-NETAPP
Documentation comments: doccomments@netapp.com
Information Web: http://www.netapp.com

Part number 215-00844
April 2004

# Copyright and trademark information

## Copyright information

Copyright © 2004 Network Appliance, Inc.; copyright © 2002-2004 Spinnaker Networks, LLC. All rights reserved. Specifications subject to change without notice.

No part of this book covered by copyright may be reproduced in any form or by any means—graphic, electronic, or mechanical, including photocopying, recording, taping, or storage in an electronic retrieval system—without prior written permission of the copyright owner.

Network Appliance reserves the right to change any products described herein at any time, and without notice. Network Appliance assumes no responsibility or liability arising from the use of products described herein, except as expressly agreed to in writing by Network Appliance. The use or purchase of this product does not convey a license under any patent rights, trademark rights, or any other intellectual property rights of Network Appliance.

The product described in this manual may be protected by one or more U.S. patents, foreign patents, or pending applications.

RESTRICTED RIGHTS LEGEND: Use, duplication, or disclosure by the government is subject to restrictions as set forth in subparagraph (c)(1)(ii) of the Rights in Technical Data and Computer Software clause at DFARS 252.277-7103 (October 1988) and FAR 52-227-19 (June 1987).

## Trademark information

NetApp and the Network Appliance design are registered trademarks of Network Appliance, Inc. in the United States, Canada, and the European Union. Network Appliance is a registered trademark of Network Appliance, Inc. in Monaco and a trademark of Network Appliance, Inc. in the United States and Canada. FAServer is a registered trademark of Network Appliance, Inc. in the United States and the European Union. NetCache is a registered trademark of Network Appliance, Inc. in the United States, Canada, the European Union, and Japan. SnapCopy is a registered trademark of Network Appliance, Inc. in the European Union and a trademark of Network Appliance, Inc. in the United States. WAFL is a registered trademark of Network Appliance, Inc. in the United States, the European Union, and Canada. DataFabric, FilerView, NearStore, SecureShare, SnapManager, SnapMirror, and SnapRestore are registered trademarks of Network Appliance, Inc. in the United States. Data ONTAP is a trademark of Network Appliance, Inc. in the United States and Canada. Snapshot is a trademark of Network Appliance, Inc. in the United States and the European Union. NetApp—the Network Appliance Company is a registered trademark of Network Appliance, Inc. in the United States and other countries. ApplianceWatch, BareMetal, Center-to-Edge, ContentDirector, gFiler, MultiStore, SecureAdmin, Serving Data by Design, Smart SAN, SnapCache, SnapDrive, SnapVault, vFiler, and Web Filer are trademarks of Network Appliance, Inc. in the United States. Spinnaker Networks, the Spinnaker Networks logo, SpinAccess, SpinCluster, SpinFS, SpinHA, SpinMove, SpinServer, and SpinStor are registered trademarks of Spinnaker Networks, LLC in the United States, other countries, or both. SpinAV, SpinManager, SpinMirror, and SpinShot are trademarks of Spinnaker Networks, LLC in the United States, other countries, or both.

Network Appliance is a licensee of the CompactFlash and CF Logo trademarks.

All other brands or products are trademarks or registered trademarks of their respective holders and should be treated as such.

# SpinServer 4100 Installation Guide

**1.0 About This Guide** ..... **1**
1.1 Typographical Conventions ..... 1
1.2 Statements of Warning ..... 2
1.3 Organization of the Guide ..... 2

***Part I: Introduction*** ..... ***3***

**2.0 Introduction** ..... **5**
2.1 SpinServer ..... 5
SpinServer 4100 ..... 5
SpinStor 200 ..... 6
2.2 SpinServer Software ..... 7
SpinFS Basic Software Package ..... 7
SpinFS Optional Software Packages ..... 7
2.3 SpinServer Documentation ..... 8

***Part II: Product Specifications and Safety Warnings*** ..... ***9***

**3.0 Product Specifications and Requirements** ..... **11**
3.1 General Product Specifications ..... 11
Product Tempering ..... 11
Floor Space Requirements ..... 11
3.2 SpinServer and SpinStor 200 Port Interface Specifications ..... 11
3.3 Dimensions and Specifications for the SpinServer ..... 12
3.4 Dimensions and Specifications for the SpinStor 200 ..... 14
3.5 Dimensions and Specifications for the 100-Volt UPS ..... 19
3.6 Dimensions and Specifications for the 120-Volt UPS ..... 21
3.7 Dimensions and Specifications for the 120-Volt ATS ..... 22
3.8 Dimensions and Specifications for the 208-Volt UPS ..... 24
3.9 Dimensions and Specifications for the 208-Volt ATS ..... 27
3.10 Dimensions and Specifications for the 230-Volt UPS ..... 30
3.11 Dimensions and Specifications for the 230-Volt ATS ..... 32
3.12 Hardware and Software Requirements ..... 34
Hardware Requirements ..... 34
Software Requirements ..... 36
3.13 Tested Equipment ..... 38

**4.0 Preinstallation Tasks** ..... **41**
4.1 Storage System Components ..... 41
4.2 Designing Storage System Topologies ..... 41
SpinServer Configuration ..... 42
RAID Configuration ..... 43
JBOD Configuration ..... 45

High Availability Configurations ... 45
4.3 Designing Topologies for Expandability ... 49
Assigning IDs to SpinServer System Components ... 49
Expanding the Topology ... 50
4.4 Unpacking and Handling Components ... 51
4.5 Product Guidelines ... 52
Static Electrical Discharge Precautions ... 52
Laser Radiation Precautions ... 52
Electrical Precautions ... 53
Electrical Warnings ... 53
SpinServer System Precautions ... 55
SpinServer System Warnings ... 55
Rack Precautions and Warnings ... 55

***Part III: Hardware Installation ... 57***

**5.0 Setting Up the Rack ... 59**
5.1 Equipment Racks ... 59
Spinnaker Racks ... 59
Non-Spinnaker Racks ... 60
5.2 Designing the Rack Layout ... 60
Unit Size ... 61
Single Rack Layout ... 61
Multiple Rack Layout ... 61
Rack Voltage ... 62
Rack PDUs ... 62
SpinServer Components in the Rack Layout Design ... 63
Layout Examples ... 66
5.3 Setting Up a Spinnaker Rack ... 67
Unpacking the Rack ... 68
Removing Rack Doors ... 68
Removing Side Panels ... 69
Removing Stabilizing Plates ... 70
Removing the Rack from the Pallet ... 71
Adjusting the Position of the Vertical Rack Rails ... 73
Marking the Positions of SpinServer Components ... 73
5.4 Replacing Rack Side Panels ... 74
5.5 Replacing Rack Doors ... 74
5.6 Attaching Anti-Tip Plates ... 75
5.7 Moving Rack to Permanent Location ... 76

**6.0 Installing the UPS ... 77**
6.1 Installing the UPS ... 78
Reviewing the Rack Layout Design ... 78
Installing the UPS in the Rack ... 78

**7.0 Installing the SpinServer ... 79**
7.1 Installing the SpinServer in the Rack ... 80
Reviewing the Rack Layout Design ... 81
SpinServer Installation Kit ... 81
SpinServer Installation in a Square-Hole Rack by Using Fastenerless Slide ... 82
SpinServer Installation in a Threaded-Hole Rack by Using Universal Slides ... 87

**8.0 Installing the SpinStor 200 ..... 91**
8.1 Installing the SpinStor 200 in the Rack ..... 93
Reviewing the Rack Layout Design ..... 93
SpinStor 200 Installation Kit ..... 94
SpinStor 200 Installation in the Rack ..... 95
Power Supply Unit Installation ..... 97
I/O Module Installation ..... 98
Drive Carrier Installation ..... 98
8.2 Setting the DIP Switches on the SpinStor 200 Enclosure ..... 99

**9.0 Setting Disk IDs and Installing Cables ..... 103**
9.1 SpinServer Ports and Connectors ..... 103
9.2 SpinStor 200 RAID LEDs and Connectors ..... 104
9.3 SpinStor 200 JBOD LEDs and Connectors ..... 105
9.4 Setting Disk IDs ..... 105
SpinStor 200 RAID ..... 105
SpinStor 200 JBOD ..... 106
9.5 Connecting the UPS Management Cable ..... 106
9.6 Connecting Fibre Channel Cables ..... 108
Dual Loops ..... 108
Optical-Fiber Fibre Channel Cables ..... 109
Copper Fibre Channel Cables ..... 109
9.7 Connecting Ethernet Cables ..... 109
9.8 Connecting the SpinStor 200 RAID to the SpinStor 200 JBOD ..... 111
9.9 Connecting the Console ..... 112
9.10 SpinServer System Physical Connections ..... 113

**10.0 Clustering and HA Connections ..... 115**
10.1 Single-Server System ..... 115
Connections for the Single-Server System ..... 116
10.2 Clustered System ..... 116
Connections for the Clustered System ..... 117
10.3 High Availability Systems ..... 117
Connections for the High Availability Systems ..... 117

**11.0 Power Connections ..... 121**
11.1 Rack Power Specifications ..... 122
11.2 Power Configuration Examples ..... 122
Power Configuration for a Single Server in a 120VAC System ..... 123
Power Configuration for Dual Servers in a 208VAC System ..... 125
Illustration for Dual Servers in a 208VAC System ..... 128

**12.0 Powering Up the System ..... 129**
12.1 Checking the Equipment ..... 129
SpinServer ..... 129
RAID and JBOD Enclosures ..... 129
12.2 Powering Up the SpinServer System ..... 130
UPS ..... 130
JBOD ..... 131
RAID ..... 131
Backup Equipment ..... 131
SpinServer ..... 132

**13.0 Powering Down the System .....135**
13.1 Stopping the SpinServer System ..... 135

***Part IV: Troubleshooting ..... 139***

**14.0 Troubleshooting .....141**
14.1 SpinServer Front Panel Switches and LEDs ..... 141
SpinServer Front Panel LEDs ..... 142
SpinServer Front Panel Switches ..... 143
14.2 Additional LEDs on the SpinServer ..... 143
SpinServer SCSI Drive Carrier LEDs ..... 144
SpinServer Power Supply LEDs ..... 144
14.3 SpinStor 200 LEDs and Fault Indicators ..... 145
SpinStor 200 Front Panel LEDs ..... 146
SpinStor 200 Fault Indicators ..... 147
14.4 Power Connection Troubleshooting ..... 151
Power Cord Connections ..... 151
Circuit Breakers ..... 153
UPS ..... 153
14.5 Disk Enclosure Troubleshooting ..... 153
System Communication ..... 154
Disk Drive I/O Modules ..... 154
Disk Drive Enclosures ..... 154
Debugging RAID Subsystem Configuration ..... 155

**15.0 Disk ID Settings .....157**

***Part V: Appendixes ..... 161***

**16.0 Appendix A: Regulatory Compliance Review .....163**
16.1 Regulatory Summary for the SpinServer ..... 163
16.2 EU Declaration of Conformity for the SpinServer ..... 164
SpinServer EU Declaration of Conformity ..... 164
16.3 Emissions Statements for the SpinServer ..... 165
FCC Class A ..... 165
ICES-003 Class A ..... 166
16.4 Class 1 Laser Statement for the SpinServer and the SpinStor 200 ..... 166
16.5 Declaration of Conformity for the SpinStor 200 ..... 167
16.6 International Standards for the SpinStor 200 ..... 168
16.7 Emissions Statements for the SpinStor 200 ..... 168
USA Federal Communications Commission (FCC) ..... 168
European Regulations ..... 168

**17.0 Appendix B: Third Party Licenses .....169**
17.1 Apache Software License ..... 169
17.2 Kerberos Software License ..... 170
17.3 Kerberos V5 License ..... 171
17.4 The OpenLDAP Public License ..... 171
17.5 Westhawk SNMP License ..... 172
17.6 Net-SNMP License ..... 173
Part 1: CMU/UCD copyright notice: (BSD like) ..... 173

Part 2: Networks Associates Technology, Inc. copyright notice (BSD) ..... 174
Part 3: Cambridge Broadband Ltd. copyright notice (BSD) ..... 174
Part 4: Sun Microsystems, Inc. copyright notice (BSD) ..... 175
17.7 GNU Lesser General Public License ..... 176
17.8 GNU General Public License ..... 184

**18.0 Glossary ..... 191**

# List of Figures

Figure 4-1. Single SpinServer topology ..... 42
Figure 4-2. Cluster with two nodes ..... 43
Figure 4-3. RAID connections to other system components ..... 44
Figure 4-4. Server-to-RAID connections and the interconnections among two RAID and two attached JBOD enclosures ..... 44
Figure 4-5. JBOD connections to other system components ..... 45
Figure 4-6. JBOD-to-RAID enclosure connections ..... 45
Figure 4-7. High availability with two SpinServers and one SpinStor 200 RAID disk enclosure ..... 46
Figure 4-8. High availability with two SpinServers and two SpinStor 200 RAID disk enclosures ..... 47
Figure 4-9. High availability with two SpinServers and two SpinStor 200 RAID enclosures ..... 48
Figure 4-10. High availability with two SpinServers and four SpinStor 200 RAID enclosures ..... 48
Figure 4-11. A basic expandable SpinServer system ..... 49
Figure 4-12. Assigning IDs to the SpinServer system components in the topology design ..... 50
Figure 4-13. Expanding the topology to include an additional SpinServer and two additional SpinStor 200 RAID enclosures ..... 51
Figure 5-1. This illustration demonstrates the relationship between rack units (U) and inches or centimeters. ..... 61
Figure 5-2. Spinnaker rack with PDUs ..... 62
Figure 5-3. The SpinServer requires 4U of vertical rack space. ..... 63
Figure 5-4. The disk enclosure requires 3U of vertical rack space. ..... 64
Figure 5-5. The UPS is placed at the bottom of the rack. The 120-volt UPS requires 2U of vertical rack space. ..... 65
Figure 5-6. The UPS is placed at the bottom of the rack. The 208-volt UPS requires 3U of vertical rack space. ..... 65
Figure 5-7. A recommended rack layout design with 120-volt UPSs ..... 66
Figure 5-8. A recommended rack layout design with 208-volt UPSs ..... 67
Figure 5-9. This illustration demonstrates the rotating handle on the doors of Spinnaker racks. ..... 68
Figure 5-10. Lift the door up and away from the hinge pins. ..... 69
Figure 5-11. To remove the side panels of the Spinnaker racks, grasp the top of the panel and pull it away from the rack. ..... 70
Figure 5-12. Remove the stabilizing plates from the rack. ..... 71
Figure 5-13. Remove the pallet brackets. ..... 72
Figure 5-14. Lift the rack off the pallet and move the rack to the work area. ..... 72
Figure 5-15. To replace the side panels on the Spinnaker racks, set the bottom of the panel onto the rack and push the top of the panel toward the rack. ..... 74
Figure 5-16. Position the door over the three hinge pins and pull down to seat the door on the hinges. ..... 75
Figure 5-17. Proper anti-tip plate placement ..... 76
Figure 7-1. Fastenerless slide assembly ..... 81
Figure 7-2. Universal slide assembly ..... 81
Figure 7-3. Insert the hooking tabs into the rack holes. ..... 83
Figure 7-4. Align the lines on the blue safety latch and the slide assembly. ..... 83
Figure 7-5. Cage nut installation ..... 84
Figure 7-6. Secure the slide assembly to the rack with the #10-32 truss head screws. ..... 84
Figure 7-7. The extended inner slide ..... 85
Figure 7-8. Depress the white tab ..... 85
Figure 7-9. The inner slide is locked in place on the SpinServer with the locking tab ..... 86
Figure 7-10. The inner slide is inserted into the slide assembly in the rack. ..... 86

Figure 7-11. Depress the white tab. 86
Figure 7-12. Universal slide assembly 87
Figure 7-13. Fasten the slides to the front of the rack. 88
Figure 7-14. Fasten the slides to the back of the rack with the washers and the screws. 88
Figure 7-15. Pull the inner slide out to the fully extended position. 89
Figure 7-16. Use the inner locking tab to free the inner sliding rail. 89
Figure 7-17. The inner slide is attached by using pan head screws. 89
Figure 7-18. The inner slide is inserted into the slide assembly in the rack. 90
Figure 8-1. SpinStor 200 rack rail assembly 96
Figure 8-2. Screwing the SpinStor 200 enclosure into the rack 97
Figure 8-3. Power supply unit installed in the disk enclosure 98
Figure 8-4. JBOD I/O module installed in the disk enclosure 98
Figure 8-5. Drive carrier installed in the disk enclosure 99
Figure 8-6. Configuration DIP switches on the operator panel 100
Figure 9-1. SpinServer ports and connectors 104
Figure 9-2. SpinStor 200 RAID LEDs and connectors 104
Figure 9-3. SpinStor 200 JBOD LEDs and connectors 105
Figure 9-4. The enclosure ID switch on the SpinStor 200 JBOD 106
Figure 9-5. Rear view of the 120-volt UPS 107
Figure 9-6. Rear view of the 208-volt UPS 107
Figure 9-7. The Fibre Channel cable is attached to the SpinServer and to the RAID enclosure. 108
Figure 9-8. The Ethernet cable is attached to the enclosure and to the Ethernet switch. 110
Figure 9-9. The Ethernet cable is attached to one SpinServer, to the Ethernet switch, and to the second SpinServer for clustering. 111
Figure 9-10. The SpinStor 200 RAID disk ports 111
Figure 9-11. The SpinStor 200 JBOD disk ports 112
Figure 9-12. The serial cable is connected to the console. 112
Figure 9-13. System cable connections for SpinServer components 113
Figure 10-1. High availability with two SpinServers and one SpinStor 200 RAID disk enclosure 118
Figure 10-2. High availability with two SpinServers and two SpinStor 200 RAID disk enclosures 119
Figure 11-1. Rear view of the 120-volt UPS 124
Figure 11-2. A power configuration with one of each of the following components: SpinServer, SpinStor 200 RAID, SpinStor 200 JBOD, 120-volt UPS, and 120-volt ATS 125
Figure 11-3. Rear view of the 208-volt UPS 127
Figure 11-4. A power configuration with two of each of the following components: SpinServer, SpinStor 200 RAID, SpinStor 200 JBOD, 208-volt UPS, 208-volt ATS, and Ethernet switch 128
Figure 12-1. Press the **|Test** power button on the 120-volt UPS. 130
Figure 12-2. Turn on both power switches. 131
Figure 12-3. Turn on both power switches. 131
Figure 12-4. Press the power button on the front panel of the SpinServer. 132
Figure 12-5. SpinStor 200 RAID LEDs 133
Figure 13-1. Press the power button on the front panel of the SpinServer. 136
Figure 13-2. Turn off both power switches. 137
Figure 14-1. The LEDs and switches on the front panel of the SpinServer 141
Figure 14-2. The SCSI drive carrier LEDs 144
Figure 14-3. The power supply LED 144
Figure 14-4. The front panel LEDs on the SpinStor 200 RAID or JBOD 146
Figure 14-5. SpinStor 200 RAID LEDs 147
Figure 14-6. SpinStor 200 JBOD LEDs 148
Figure 14-7. Power cord connections 152
Figure 14-8. Spinnaker rack with PDUs 153
Figure 15-1. The slot settings on the SpinStor 200 enclosure 157

Figure 15-2. The enclosure ID switch on the back of the SpinStor 200 JBOD ..... 158

# List of Tables

Table 3-1. Dimensions and Specifications for the SpinServer 4100 ... 12
Table 3-2. Dimensions and Specifications for the SpinStor 200 RAID ... 15
Table 3-3. Dimensions and Specifications for the SpinStor 200 JBOD ... 17
Table 3-4. Dimensions and Specifications for the 100-Volt UPS ... 20
Table 3-5. Dimensions and Specifications for the 120-Volt UPS ... 21
Table 3-5. Dimensions and Specifications for the 120-Volt ATS ... 22
Table 3-1. Dimensions and Specifications for the 2U 208-Volt UPS (1334-0006-01) ... 25
Table 3-6. Dimensions and Specifications for the 3U 208-Volt UPS (1334-0002-01) ... 26
Table 3-7. Dimensions and Specifications for the 208-Volt/16A ATS ... 27
Table 3-8. Dimensions and Specifications for the 208-Volt/24A ATS ... 29
Table 3-9. Dimensions and Specifications for the 230-Volt UPS ... 31
Table 3-10. Dimensions and Specifications for the 230-Volt ATS ... 33
Table 7-1. SpinServer Installation Kit ... 80
Table 7-2. SpinServer Mounting Hardware Kit ... 82
Table 8-1. SpinStor 200 Mounting Hardware Kit Parts ... 94
Table 8-2. DIP Switch Settings for the SpinStor 200 Enclosure ... 101
Table 9-1. Settings for Enclosure ID Switches on the SpinStor 200 JBOD ... 106
Table 11-1. PDU Specifications ... 122
Table 14-1. LEDs on the SpinStor 200 RAID and JBOD Enclosures ... 149
Table 15-1. Disk ID Settings for RAID and JBOD enclosures ... 158
Table 16-1. Regulatory Summary for the SpinServer ... 163
Table 16-2. SpinServer EU Declaration of Conformity ... 164

# 1.0 About This Guide

The *SpinServer 4100 Installation Guide* is written for system administrators. It includes information that is needed to install a SpinServer® 4100 system.

## 1.1 Typographical Conventions

This document uses the following typographical conventions:

- **`Fixed-width bold text`** indicates commands and command options in syntax definitions, examples, and running text.
- *Italicized text* indicates user-supplied values. For example, **`-deviceid`** *`device_ID`* indicates that you supply a device ID for *`device_ID`* after the **`-deviceid`** parameter. Italics also indicate emphasis and the titles of books.
- **Bold text** indicates GUI elements (including menus, menu items, labels, buttons, icons, and folders), keys on the keyboard (for example, **Enter** and **ESC**), and literal values.
- `Fixed-width text` indicates screen output.
- The backslash character ( `\` ) is used to indicate a line break in a command. When issuing a command, you do not need to enter this symbol.
- Lists from which you must choose an item in syntax descriptions are enclosed in braces ( `{ }` ). For example, `{`**`true`** `|` **`false`**`}` indicates that you must choose between **`true`** and **`false`**. Do not enter the braces in the command.
- The vertical column ( `|` ) separates items in a list of choices enclosed in braces in syntax descriptions, as shown in the example above.
- Ellipses ( **`...`** ) in syntax descriptions indicate that you can repeat the preceding item one or more times. Ellipses in examples indicate that the information was omitted for the sake of brevity.
- An item in syntax descriptions enclosed in square brackets ( `[ ]` ) is optional. For example in the following command, the `[ ]` characters indicate that the parameter **`-nodetype`** is optional:
  `spinserver::>` **`spinaccess cifs servers new -vsname VS1 \ -netbios NB1 -domain ENG`** `[`**`-nodetype H`**`]`
  Leaving the optional parameters out of the command line has no consequences for command execution. The brackets are not to be entered as part of the command.
- In command examples, the CLI prompt is represented as follows:
  `spinserver::>`
  On a SpinServer system, the word `spinserver` in the prompt is replaced with the name of the SpinServer itself. For instance, on a SpinServer named Server1, the CLI

prompt is the following:
`Server1::>`

## 1.2 Statements of Warning

Statements of warning and caution are used in this guide. They have the following meanings and uses.

**Warning:** This statement indicates that failure to follow directions in the statement can result in bodily harm or loss of life.

**Caution:** This statement indicates that failure to follow directions in the statement can result in damage to equipment or loss of information and data.

**Important:** This statement presents clarifying information or specific instructions.

**Note:** This statement presents commentary, sidelights, or interesting points of information.

## 1.3 Organization of the Guide

This guide provides conceptual and installation information for components of the SpinServer 4100 system. After the installation is complete, you are ready to configure the SpinServer and disk-storage units such as the SpinStor® 200 RAID and JBOD. To install and configure the SpinFS® software onto a SpinServer system, see the *SpinFS 2.5 Administration Guide*.

# *Part I: Introduction*

Part I includes the following chapter:

**Chapter 2: Introduction**

“Introduction” on page 5 provides an introduction to the features of the SpinServer product.

# 2.0 Introduction

The SpinServer 4100 provides the following features:

- High capacity for storage and delivery of content and data.
- Storage capacity that can be expanded without system downtime or disruptions.
- Simple management and maintenance.
- Single point of global management.
- SpinCluster®, which enables end users to view a number of SpinServers as a single file system in a server cluster.
- SpinShot™, which creates a snapshot of data.
- SpinRestore, which restores data from SpinShots or mirrors.
- SpinMove®, which provides the administrative tools to nondisruptively move file systems to new locations within a SpinCluster.
- SpinMirror™, which provides the administrative tools to mirror data within a SpinCluster.
- SpinHA®, which provides a system with high availability (HA) that has no single point of failure.

## 2.1 SpinServer

The SpinServer is an enterprise-class, transparently scalable storage system. With SpinFS, the file-management tool suite that is presented in the SpinManager™ graphical user interface (GUI) and the command line interface (CLI), the SpinServer system processes file system requests from NFS and CIFS clients.

### SpinServer 4100

The following items are included with the SpinServer:

- SpinServer chassis
- Two AC power cords
- Null modem cable (for console connection)
- SpinServer software and documentation CD
- *SpinServer 4100 Quick Start Guide*

### SpinServer Chassis Components

The SpinServer chassis includes the following components:

- Two redundant power supplies
- Two redundant SpinFS SCSI disk drives
- Two 2.8-GHz Intel Pentium 4 processors, 4 GB memory
- Two dual-port Fibre Channel Host Bus Adapters (HBAs)
- One 10/100/1000Base-T MB Ethernet port for management
- Two Gigabit Ethernet (1000Base-T) network ports
- Two Gigabit Ethernet (1000Base-T) SpinCluster ports
- Two serial ports for console and uninterruptible power supply (UPS) connections

## SpinStor 200

**Important:** SpinStor 200 storage systems are used only with legacy SpinServer systems. New SpinServer systems use FAS270c (RAID) and DS14mk2 (JBOD) storage.

Additional RAID and JBOD enclosures can be added when you need to expand your storage capacity. The SpinStor 200 RAID enclosure provides reliable, fault-tolerant data storage. The SpinStor 200 JBOD enclosure is attached to the RAID enclosure to provide additional storage space for data.

The SpinStor 200 RAID and SpinStor 200 JBOD disk enclosures are populated with 146-GB, 10,000-RPM disk drives.

The SpinStor 200 enclosures include the following components.

### SpinStor 200 RAID

The following items are included in the SpinStor 200 RAID shipping carton:

- SpinStor 200 RAID enclosure with dual RAID controllers
- Two AC power cords
- Two fiber-optic Fibre Channel cables
- Two fiber-optic small form factor pluggable (SFP) Gigabit Interface Converters (GBICs)
- Two copper GBICs
- Shelf assemblies for rack installation
- One hardware-mounting kit
- Separately boxed disk drives in disk carriers

### SpinStor 200 JBOD

The following items are included in the SpinStor 200 JBOD shipping carton:

- SpinStor 200 enclosure with dual JBOD I/O modules
- Two AC power cords
- Two copper DB-9 Fibre Channel cables
- Four copper Fibre Channel GBICs
- Shelf assemblies for rack installation
- One hardware-mounting kit
- Separately boxed disk drives in disk carriers

## 2.2 SpinServer Software

The SpinServer 4100 includes the SpinFS software, which is provided on the software CD for installation on the SpinServer.

### SpinFS Basic Software Package

The SpinFS software package includes the following:

- SpinManager CLI and GUI provide management tools.
- SpinCluster scales capacity and performance.
- SpinMove provides nondisruptive file-system movement anywhere within a SpinCluster.
- SpinShot provides a snapshot of data, taken at a particular point in time, that is stored on the same SpinServer. A SpinShot is read-only.
- SpinRestore restores data from SpinShots and mirrors.

The SpinManager management CLI and GUI interfaces provide the tools to set up and configure clusters, RAID sets, storage pools, and virtual file systems (VFSs). After initial configuration, use the CLI and GUI tools to monitor the performance of the SpinServer system.

### SpinFS Optional Software Packages

The following optional software packages can be separately ordered:

- SpinHA, which can be configured on two or more SpinServers to provide fast, transparent disk-access failover in the event of a server failure.

**Note:** SpinHA is provided as part of the base software package with new SpinServer systems.

- SpinMirror, which provides the asynchronous mirroring of data across SpinServers that are connected via a LAN, MAN, or WAN in a SpinCluster. A mirror is read-only.

For information on installing and using SpinFS software, see the *SpinFS 2.5 Administration Guide*.

## 2.3 SpinServer Documentation

The following documentation is provided for the SpinServer:

- *SpinFS Architecture Basic Concepts Guide*
- *SpinFS 2.5 Administration Guide*
- *SpinFS 2.5 Administration Reference*
- *SpinServer 4100 Installation Guide*
- *SpinServer 4100 Quick Start Guide*
- *SpinServer Release Notes*
- *SpinServer Supported Storage Release Notes*
- *SpinServer Site Preparation Guide*

Documentation is available in PDF format and can be accessed from the SpinManager GUI or from the Spinnaker CD. To access the documentation from the CD, open the `root_directory/SpinDocs/index.html` file in a web browser, where `root_directory` is the root directory of the CD.

# *Part II: Product Specifications and Safety Warnings*

Part II includes the following chapters:

**Chapter 3: Product Specifications and Requirements**

"Product Specifications and Requirements" on page 11 provides detailed information about product specifications and product site requirements.

**Chapter 4: Preinstallation Tasks**

"Preinstallation Tasks" on page 41 describes system component topology and provides safety information and warnings specific to the features of the SpinServer and SpinStor 200 products.

# 3.0 Product Specifications and Requirements

This chapter describes the physical dimensions of the SpinServer system components. It also details the power and environmental requirements for proper functioning of the SpinServer system.

## 3.1 General Product Specifications

### Product Tempering

If the equipment has been stored in an environment outside the operating temperature range specified in the following section, allow the equipment to sit at room temperature for 24 hours before beginning the installation process.

**Caution:** Condensation can occur during shipment. It is important to allow the equipment to warm to room temperature before installation.

### Floor Space Requirements

It is important to provide sufficient floor space to allow adequate airflow around the system and to allow you to perform maintenance procedures on the SpinServer chassis. See the *Network Appliance 42U System Cabinet Guide* for information on the floor-space requirements for the system cabinets.

## 3.2 SpinServer and SpinStor 200 Port Interface Specifications

The specifications for the port interfaces for the SpinServer and the SpinStor 200 follow:

**Fibre Channel Physical Layer Interface**

- 2.125 Gigabaud/second
- Multimode 850 nm laser fiber-optic interface
- Compliant with FDA and IEC Class 1 laser safety standards
- Duplex SC fiber optic receptacle
- Multimode 50 um/125 um fiber, maximum fiber cable length 300 m
- Multimode 62.5 um/125 um fiber, maximum fiber cable length 150 m

**SpinServer Network and Cluster Ethernet 1000Base-T Interface**

- Copper 10Base-T/100Base-T/1000Base-T
- Compliant with standards IEEE 802.3u and IEEE 802.3ab
- Copper RJ-45 connector
- UTP Category 5/5e cable, up to 100 m installed in accordance with ANSI/TIA/EIA-568-A and ISO/IEC 11801:1995 standards

## 3.3 Dimensions and Specifications for the SpinServer

For your reference, the physical dimensions and the power and environmental requirements for the SpinServer are provided in the following table.

**Table 3-1. Dimensions and Specifications for the SpinServer 4100**

| Description | Specification |
|---|---|
| **Physical** | |
| Dimensions (H X W X D) | 17.7 X 44.5 X 66.0 cm (6.97 X 17.52 X 25.99 in.) |
| Weight | 28.2 kg (62 lbs.) |
| **Power** | |
| Typical input requirements, 100 VAC | |
| Voltage | 100 VAC |
| Current | 3.43 A |
| VoltAmp | 343 VA |
| Power | 333 W |
| Typical input requirements, 120 VAC | |
| Voltage | 120 VAC |

| Description | Specification |
|---|---|
| Current | 2.95 A |
| VoltAmp | 354 VA |
| Power | 328 W |
| Typical input requirements, 200 VAC | |
| Voltage | 200 VAC |
| Current | 2.48 A |
| VoltAmp | 496 VA |
| Power | 323 W |
| Typical input requirements, 208 VAC | |
| Voltage | 208 VAC |
| Current | 2.45 A |
| VoltAmp | 510 VA |
| Power | 324 W |
| Typical input requirements, 230 VAC | |
| Voltage | 230 VAC |
| Current | 2.25 A |
| VoltAmp | 518 VA |
| Power | 324 W |
| Maximum power supply output | 350 W |
| Typical power | 329 W |
| Typical heat dissipation | 4.71 kcal/min. (1123 BTU/hr.) |
| **Environmental** | |
| Ambient temperature | |
| Operating range | +10° to +35° C (+50° to +95° F) at 0 ft. elevation; 0.5° C/1000 ft. temperature derating to 10,000 ft. |
| Nonoperating range | -10° to +60° C (+14° to +140° F) |
| Relative humidity | |
| Operating range | 20% to 80%, noncondensing |

| Description | Specification |
|---|---|
| Nonoperating range | 5% to 90%, noncondensing |
| Operating elevation | 0 to 3,048 m (0 to 10,000 ft.) |

## 3.4 Dimensions and Specifications for the SpinStor 200

For your reference, the dimensions and specifications of the SpinStor 200 RAID and JBOD are provided in the following tables.

**Important:** SpinStor 200 storage systems are used only with legacy SpinServer systems. New SpinServer systems use FAS270c (RAID) and DS14mk2 (JBOD) storage. See the *FAS270/270c Storage Appliance Hardware and Service Guide* and *DiskShelf14 and DiskShelf14mk2 FC Hardware Guide* for specifications on the FAS270c and DS14mk2 units, respectively. The following information is provided for legacy reference only.

**Table 3-2. Dimensions and Specifications for the SpinStor 200 RAID**

| Description | Specification |
|---|---|
| **Physical** | |
| Dimensions (H X W X D) | 13.4 X 44.6 X 58.0 cm (5.28 X 17.56 X 22.83 in.) |
| Weight | 37 kg (81 lbs.) |
| **Power** | |
| Rated input requirements | |
| Rated voltage | 100 to 120 / 200 to 240 VAC |
| Rated frequency | 50 to 60 Hz |
| Maximum rated input current | 7 / 3.5 A |
| Typical input requirements | |
| Operating requirements, 100 VAC: | |
| Voltage | 100 VAC |
| Current | 4.21 A |
| VoltAmp | 421 VA |
| Power factor | 99% |
| Power | 412 W |
| Operating requirements, 120 VAC: | |
| Voltage | 120 VAC |
| Current | 3.48 A |
| VoltAmp | 418 VA |
| Power factor | 99% |
| Power | 412 W |
| Operating requirements, 200 VAC: | |
| Voltage | 200 VAC |
| Current | 2.18 A |
| VoltAmp | 436 VA |
| Power factor | 95% |
| Power | 412 W |

| Description | Specification |
|---|---|
| Operating requirements, 208 VAC: | |
| Voltage | 208 VAC |
| Current | 2.15 A |
| VoltAmp | 447 VA |
| Power factor | 92% |
| Power | 412 W |
| Operating requirements, 230 VAC: | |
| Voltage | 230 VAC |
| Current | 1.96 A |
| VoltAmp | 451 VA |
| Power factor | 91% |
| Power | 412 W |
| Maximum power supply output | 450 W |
| Typical heat dissipation | 5.90 kcal/min. (1406 BTU/hr.) |
| **Environmental** | |
| Ambient temperature | |
| Operating range | +5° to +40° C (+41° to +104° F) |
| Nonoperating range | 0° to +50° C (+32° to +122° F) |
| Storage range | +1° to +60° C (+34° to +140° F) |
| Shipping range | -40° to +60° C (-40° to +140° F) |
| Relative humidity | |
| Operating range | 20% to 80%, noncondensing |
| Nonoperating range | 8% to 80%, noncondensing |
| Storage range | 8% to 80%, noncondensing |
| Shipping range | 5% to 100%, nonprecipitating |
| Maximum wet bulb | |
| Operating range | 23° C (73° F) |
| Nonoperating range | 27° C (81° F) |

| Description | Specification |
|---|---|
| Storage range | 29° C (84° F) |
| Shipping range | 29° C (84° F) |
| Operating elevation | 0 to 3,048 m (0 to 10,000 ft.) |

**Table 3-3. Dimensions and Specifications for the SpinStor 200 JBOD**

| Description | Specification |
|---|---|
| **Physical** | |
| Dimensions (H X W X D) | 13.4 X 44.6 X 58.0 cm (5.28 X 17.56 X 22.83 in.) |
| Weight | 37 kg (81 lbs.) |
| **Power** | |
| Rated input requirements | |
| Rated voltage | 100 to 120 / 200 to 240 VAC |
| Rated frequency | 50 to 60 Hz |
| Maximum rated input current | 7 / 3.5 A |
| Typical input requirements | |
| Operating requirements, 100 VAC: | |
| Voltage | 100 VAC |
| Current | 4.02 A |
| VoltAmp | 402 VA |
| Power factor | 99% |
| Power | 391 W |
| Operating requirements, 120 VAC: | |
| Voltage | 120 VAC |
| Current | 3.31 A |
| VoltAmp | 397 VA |
| Power factor | 99% |
| Power | 391 W |
| Operating requirements, 200 VAC: | |

| Description | Specification |
|---|---|
| Voltage | 200 VAC |
| Current | 2.06 A |
| VoltAmp | 412 VA |
| Power factor | 95% |
| Power | 391 W |
| Operating requirements, 208 VAC: | |
| Voltage | 208 VAC |
| Current | 2.04 A |
| VoltAmp | 425 VA |
| Power factor | 92% |
| Power | 391 W |
| Operating requirements, 230 VAC: | |
| Voltage | 230 VAC |
| Current | 1.86 A |
| VoltAmp | 428 VA |
| Power factor | 91% |
| Power | 391 W |
| Maximum power supply output | 450 W |
| Typical heat dissipation | 5.60 kcal/min. (1334 BTU/hr.) |
| **Environmental** | |
| Ambient temperature | |
| Operating range | +5° to +40° C (+41° to +104° F) |
| Nonoperating range | 0° to +50° C (+32° to +122° F) |
| Storage range | +1° to +60° C (+34° to +140° F) |
| Shipping range | -40° to +60° C (-40° to +140° F) |
| Relative humidity | |
| Operating range | 20% to 80%, noncondensing |
| Nonoperating range | 8% to 80%, noncondensing |

| Description | Specification |
|---|---|
| Storage range | 8% to 80%, noncondensing |
| Shipping range | 5% to 100%, nonprecipitating |
| Maximum wet bulb | |
| Operating range | 23° C (73° F) |
| Nonoperating range | 27° C (81° F) |
| Storage range | 29° C (84° F) |
| Shipping range | 29° C (84° F) |
| Operating elevation | 0 to 3,048 m (0 to 10,000 ft.) |

**Caution:** Operating the disk enclosure with one or more disks removed increases the operating temperature of the remaining disks. Although the increase is modest and does not cause imminent failure, avoid operating the disk enclosure with one or more disks removed.

## 3.5 Dimensions and Specifications for the 100-Volt UPS

The following table provides the dimensions and specifications of the 100-volt Uninterruptible Power Supply (UPS).

**Table 3-4. Dimensions and Specifications for the 100-Volt UPS**

| Description | Specification |
|---|---|
| **APC part number** | SUA1500RMJ2U |
| **Physical** | |
| Chassis dimensions (H X W X D) | 8.69 X 47.98 X 46.38 cm (3.42 X 18.89 X 18.26 in.) |
| Weight | 25.0 kg (55 lbs.) |
| **Power** | |
| Nominal input voltage | 100 VAC |
| Online input voltage range | 74 to 123 VAC |
| Online output voltage range | 92 to 108 VAC |
| Frequency limits, online operation | 45 to 65 Hz |
| Maximum load | 1500 VA/980 W |
| Nominal output voltage | 100 VAC |
| Online power consumption | 66 W |
| Online thermal dissipation | 225 BTU/hr. |
| **Power Connections** | |
| Input | 1 X 8-foot cord with NEMA 5-15P plug |
| Output | 6 X NEMA 5-15R chassis mount outlets |
| **Environmental** | |
| Ambient temperature | |
| Operating range | 0° to +40° C (+32° to +104° F) |
| Nonoperating range | -15° to +45° C (+5° to +113° F) |
| Relative humidity | |
| Operating and nonoperating range | 0 to 95% (noncondensing) |
| Elevation | |
| Operating | 0 to 3,000 m (0 to 10,000 ft.) |
| Nonoperating | 0 to 15,000 m (0 to 50,000 ft.) |
| **Regulatory** | |
| Safety approvals | UL1778 |

| Description | Specification |
|---|---|
| Emissions | VCCI |

## 3.6 Dimensions and Specifications for the 120-Volt UPS

For your reference, the dimensions and specifications of the 120-volt UPS are provided in the following table.

**Table 3-5. Dimensions and Specifications for the 120-Volt UPS**

| Description | Specification |
|---|---|
| **APC part number** | SUA1000RM2U |
| **Physical** | |
| Chassis dimensions (H X W X D) | 8.89 X 48.26 X 45.72 cm (3.5 X 19.0 X 18.0 in.) |
| Weight | 28.1 kg (62 lbs.) |
| **Power** | |
| Nominal input voltage | 120 VAC |
| Online input voltage range | 82 to 144 VAC |
| Online output voltage range | 106 to 127 VAC |
| Frequency limits, online operation | 47 to 63 Hz |
| Maximum load | 1000 VA/670 W |
| Nominal output voltage | 120 VAC |
| Online power consumption | 26 W |
| Online thermal dissipation | 89 BTU/hr. |
| **Power connections** | |
| Input | 1 X 8-foot cord with NEMA 5-15P plug |
| Output | 6 X NEMA 5-15R chassis mount outlets |
| **Environmental** | |
| Ambient temperature | |
| Operating range | 0° to +40° C (+32° to +104° F) |

| Description | Specification |
|---|---|
| Nonoperating range | -15° to +45° C (+5° to +113° F) |
| Relative humidity | |
| Operating and nonoperating range | 0% to 95% |
| Elevation | |
| Operating elevation | 0 to 3,000 m (0 to 10,000 ft.) |
| Nonoperating elevation | 0 to 15,000 m (0 to 50,000 ft.) |
| **Regulatory** | |
| Safety approvals | UL 1778, CSA |
| Emissions | FCC Part 15 Class A |

## 3.7 Dimensions and Specifications for the 120-Volt ATS

The following table provides dimensions and specifications for the 120-volt ATS.

**Important:** ATSs are used with legacy SpinServer systems; they are not provided or used with new SpinServer systems. The following information is provided for legacy reference only.

**Table 3-5. Dimensions and Specifications for the 120-Volt ATS**

| Description | Specification |
|---|---|
| **APC part number** | SU041 |
| **Power** | |
| Nominal input voltage | 120 VAC |
| Maximum load | 1440 VA, 12 A |
| Allowable input voltage | 0 to 165 VAC |
| Frequency limits | 47 to 63 Hz |
| 60-Hz transfer times* | 8 ms typical, 16 ms maximum |
| 50-Hz transfer times* | 10 ms typical, 20 ms maximum |
| **Power consumption (typical, no load)** | |

| Description | Specification |
|---|---|
| Amps | 0.11A |
| VA | 13 VA |
| Watts | 6 W |
| **Power connections** | |
| Input | 2 X 6-foot cords with NEMA 5-15 plugs |
| Output | 2 X NEMA 5-15R chassis mount receptacles |
| **Environmental** | |
| Ambient temperature | |
| Operating range | 0° to +40° C (+32° to +104° F) |
| Nonoperating range | -15° to +65° C (+5° to +149° F) |
| Relative humidity | |
| Operating and nonoperating range | 0% to 95%, noncondensing |
| Elevation | |
| Operating range | 0 to 3,000 m (0 to 10,000 ft.) |
| Nonoperating range | 0 to 15,000 m (0 to 50,000 ft.) |
| **Physical** | |
| Dimensions (H X W X D) | 4.45 X 43.18 X 22.99 cm (1.75 X 17.0 X 9.05 in.) |
| Weight | 4.55 kg (10 lbs.) |
| **Regulatory** | |
| Safety approvals | Listed to UL 1778, certified to CSA 107.1 |
| Emissions | FCC Part 15 Class A certified |

* **Note**: Default transfer voltage and sensitivity settings

## 3.8 Dimensions and Specifications for the 208-Volt UPS

For your reference, the physical dimensions and the power and environmental requirements for the 2U and 3U 208-volt UPS (Spinnaker part numbers 1334-0006-01 and 1334-0002-01, respectively) are given in the following tables.

**Note:** The 3U 208-volt UPS (1334-0002-01) is no longer in production by APC, and the 2U unit (1334-0006-01) is shipped with new SpinServer systems. The illustrations and examples in the SpinServer documentation show the 3U unit.

**Table 3-1. Dimensions and Specifications for the 2U 208-Volt UPS (1334-0006-01)**

| Description | Specification |
|---|---|
| **APC part number** | SUA3000RMT2U |
| **Physical** | |
| Dimensions (H X W X D) | 8.89 X 48.26 X 66.04 cm (3.5 X 19.0 X 26.0 in.) |
| Weight | 43.6 kg (96 lbs.) |
| **Power** | |
| Nominal input voltage | 208 VAC |
| Online input voltage range | 141 to 255 VAC |
| Online output voltage range | 182 to 225 VAC |
| Frequency limits, online operation | 45 to 65 Hz |
| Maximum load | 3000 VA/2700 W |
| Nominal output voltage | 208 VAC |
| Online power consumption | 117 W |
| Online thermal dissipation | 400 BTU/hr. |
| **Power connections** | |
| Input | 1 X 8-foot cord with NEMA L6-20P plug |
| Output | 1 X NEMA L6-20R chassis mount outlet<br>1 X NEMA L6-30R chassis mount outlet |
| **Environmental** | |
| Ambient temperature | |
| Operating range | 0° to +40° C (+32° to +104° F) |
| Nonoperating range | -15° to +45° C (+5° to +113° F) |
| Relative humidity | |
| Operating and nonoperating range | 0% to 95% |
| Elevation | |
| Operating range | 0 to 3,000 m (0 to 10,000 ft.) |
| Nonoperating range | 0 to 15,000 m (0 to 50,000 ft.) |
| **Regulatory** | |

| Description | Specification |
|---|---|
| Safety approvals | UL1778, CSA |
| Emissions | FCC Part 15 Class A |

**Table 3-6. Dimensions and Specifications for the 3U 208-Volt UPS (1334-0002-01)**

| Description | Specification |
|---|---|
| **Physical** | |
| Dimensions (H X W X D) | 13.3 X 43.2 X 62.2 cm (5.25 X 17.0 X 24.5 in.) |
| Weight | 58 kg (128 lbs.) |
| **Power** | |
| Online input voltage range | 160 to 253 VAC |
| Output voltage range | 177 to 229 VAC |
| Frequency limits, online operation | 47 to 63 Hz |
| Transfer time | 2 ms typical, 4.5 ms maximum |
| Maximum load | 3000 VA/2250 W |
| On-battery output voltage | 208 VAC |
| On-battery frequency | 50 or 60 Hz, unless synchronized to utility during brownout |
| Typical battery life | 3 to 6 years, depending on number of discharge cycles and ambient temperature |
| Typical recharge time | 2 to 5 hours |
| **Environmental** | |
| Ambient temperature | |
| Operating range | 0° to +40° C (+32° to +104° F) |
| Nonoperating range | -15° to +45° C (+5° to +113° F) |
| Relative humidity | |
| Operating and nonoperating range | 0% to 95% |
| Operating elevation | 0 to 3,000 m (0 to 10,000 ft.) |

## 3.9 Dimensions and Specifications for the 208-Volt ATS

The following tables provide dimensions and specifications for the 16A and 24A 208-volt ATSs.

**Important:** ATSs are used with legacy SpinServer systems; they are not provided or used with new SpinServer systems. The following information is provided for legacy reference only.

**Table 3-7. Dimensions and Specifications for the 208-Volt/16A ATS**

| Description | Specification |
|---|---|
| **APC part number** | SU045-1 |
| **Power** | |
| Nominal input voltage | 208 VAC |
| Maximum load | 3328 VA, 16 A |
| Allowable input voltage | 0 to 275 VAC |
| Frequency limits | 47 to 63 Hz |
| 60-Hz transfer times* | 8 ms typical, 16 ms maximum |
| 50-Hz transfer times* | 10 ms typical, 20 ms maximum |
| **Power consumption (typical, no load)** | |
| Amps | 0.15 A |
| VA | 31 VA |
| Watts | 6 W |
| **Power connections** | |
| Input | 2 X 6-foot cords with NEMA L6-20P plugs |
| Output | 1 X 2-foot cord with NEMA L6-20R receptacle |
| **Environmental** | |
| Ambient temperature | |
| Operating range | 0° to +50° C (+32° to + 122° F) |
| Nonoperating range | -15° to +65° C (+5° to +149° F) |
| Relative humidity | |

| Description | Specification |
|---|---|
| Operating and nonoperating range | 0% to 95%, noncondensing |
| Elevation | |
| Operating range | 0 to 3,000 m (0 to 10,000 ft.) |
| Nonoperating range | 0 to 15,000 m (0 to 50,000 ft.) |
| **Physical** | |
| Dimensions (H X W X D) | 4.45 X 44.45 X 22.86 cm (1.75 X 17.5 X 9.0 in.) |
| Weight | 4.55 kg (10 lbs.) |
| **Regulatory** | |
| Safety approvals | Listed to UL 1778, certified to CSA 107.1 |
| Emissions | FCC Part 15 Class A certified |

* **Note**: Default transfer voltage and sensitivity settings

**Table 3-8. Dimensions and Specifications for the 208-Volt/24A ATS**

| Description | Specification |
|---|---|
| **APC part number** | SU045X163 |
| **Power** | |
| Nominal input voltage | 208 VAC |
| Maximum load | 4992 VA, 24 A |
| Allowable input voltage | 0 to 275 VAC |
| Frequency limits | 47 to 63 Hz |
| 60-Hz transfer times* | 8 ms typical, 16 ms maximum |
| 50-Hz transfer times* | 10 ms typical, 20 ms maximum |
| **Power consumption (typical, no load)** | |
| Amps | 0.15 A |
| VA | 31 VA |
| Watts | 6 W |
| **Power connections** | |
| Input | 2 X 12-foot cords with NEMA L6-30P plugs |
| Output | 1 X 2-foot cord with NEMA L6-30R receptacle |
| **Environmental** | |
| Ambient temperature | |
| Operating range | 0° to +50° C (+32° to + 122° F) |
| Nonoperating range | -5° to +55° C (+23° to +131° F) |
| Relative humidity | |
| Operating and nonoperating range | 0% to 95%, noncondensing |
| Elevation | |
| Operating range | 0 to 3,000 m (0 to 10,000 ft.) |
| Nonoperating range | 0 to 15,000 m (0 to 50,000 ft.) |
| **Physical** | |
| Dimensions (H X W X D) | 4.45 X 44.45 X 22.86 cm (1.75 X 17.5 X 9.0 in.) |

| Description | Specification |
|---|---|
| Weight | 4.55 kg (10 lbs.) |
| **Regulatory** | |
| Safety approvals | Listed to UL 1778, certified to CSA 107.1 |
| Emissions | FCC Part 15 Class A certified |

* **Note**: Default transfer voltage and sensitivity settings

## 3.10 Dimensions and Specifications for the 230-Volt UPS

The following table provides dimensions and specifications for the 230-volt UPS.

**Table 3-9. Dimensions and Specifications for the 230-Volt UPS**

| Description | Specification |
|---|---|
| **APC part number** | SUA1000RMI2U |
| **Physical** | |
| Dimensions (H X W X D) | 8.89 X 48.26 X 45.72 cm (3.5 X 19.0 X 18.0 in.) |
| Weight | 28.1 kg (62 lbs.) |
| **Power** | |
| Nominal input voltage | 230 VAC |
| Online input voltage range | 160 to 280 VAC |
| Online output voltage range | 208 to 253 VAC |
| Frequency limits, online operation | 47 to 63 Hz |
| Maximum load | 1000 VA/670 W |
| Nominal output voltage | 230 VAC |
| Online power consumption | 26 W |
| Online thermal dissipation | 89 BTU/hr. |
| **Power connections** | |
| Input | 1 X IEC 60320-C14 chassis mount inlet |
| Output | 4 X IEC 60320-C13 chassis mount outlets |
| **Environmental** | |
| Ambient temperature | |
| Operating range | 0° to +40° C (+32° to +104° F) |
| Nonoperating range | -15° to +45° C (+5° to +113° F) |
| Relative humidity | |
| Operating and nonoperating range | 0% to 95% |
| Elevation | |
| Operating range | 0 to 3,000 m (0 to 10,000 ft.) |
| Nonoperating range | 0 to 15,000 m (0 to 50,000 ft.) |
| **Regulatory** | |
| Safety approvals | CE, EN50091-1, GOST, VDE |

| Description | Specification |
|---|---|
| Emissions | CE, EN50091-2, C-Tick |

## 3.11 Dimensions and Specifications for the 230-Volt ATS

The following table provides dimensions and specifications for the 230-volt ATS.

**Important:** ATSs are used with legacy SpinServer systems; they are not provided or used with new SpinServer systems. The following information is provided for legacy reference only.

**Table 3-10. Dimensions and Specifications for the 230-Volt ATS**

| Description | Specification |
|---|---|
| **APC part number** | SU043 |
| **Power** | |
| Nominal input voltage | 230 VAC |
| Maximum load | 2300 VA, 10A |
| Allowable input voltage | 0 to 325 VAC |
| Frequency limits | 47 to 63 Hz |
| 60-Hz transfer times* | 8 ms typical, 16 ms maximum |
| 50-Hz transfer times* | 10 ms typical, 20 ms maximum |
| **Power connections** | |
| Input | 2 X IEC 60320-C14 chassis mount inlets |
| Output | 2 X IEC 60320-C13 chassis mount outlets |
| **Environmental** | |
| Ambient temperature | |
| Operating range | 0° to +50° C (+32° to + 122° F) |
| Nonoperating range | -15° to +65° C (+5° to +149° F) |
| Relative humidity | |
| Operating and nonoperating range | 0% to 95%, noncondensing |
| Elevation | |
| Operating range | 0 to 3,000 m (0 to 10,000 ft.) |
| Nonoperating range | 0 to 15,000 m (0 to 50,000 ft.) |
| **Physical** | |
| Dimensions (H X W X D) | 4.45 X 45.72 X 22.86 cm (1.75 X 18.0 X 9.0 in.) |
| Weight | 4.55 kg (10 lbs.) |
| **Regulatory** | |
| Safety approvals | UL, CSA, CE, EN60950, EN50091-1, VDE |
| Emissions | CE, EN50091-2, C-Tick |

* **Note**: Default transfer voltage and sensitivity settings

## 3.12 Hardware and Software Requirements

Additional hardware and software requirements for the proper functioning of the SpinServer system are detailed in this section.

### Hardware Requirements

The following hardware is required to run and manage the SpinServer system.

#### Ethernet

Depending on your configuration, your SpinServer can use as many as four gigabit Ethernet network connections in addition to the 10/100Base-T Ethernet connection used for the management interface.

- One 10/100Base-T Ethernet port for management of the SpinServer
- Two gigabit Ethernet (1000Base-T) ports for network traffic
- Two gigabit Ethernet (1000Base-T) ports for multiple SpinServer clustering

#### Console

To initialize the SpinServer, a serial console, connected to the serial port (COM1) with the null modem cable, is needed to access the command line interface (CLI) management software.

After initialization, the management software is used to complete configuration and management tasks, receive error messages, and maintain your system. For the flexibility and convenience of working remotely, any host running secure shell (SSH) can access the CLI, and any host with a web browser can access the GUI.

#### Ethernet Switches for SpinCluster Ports

The following Ethernet switches, for clustering, have been tested and certified for interoperability with the SpinServer:

- Extreme Networks Gigabit Ethernet Switch, Summit 7i
- Extreme Networks Gigabit Ethernet Switch, Summit 5i
- Extreme Networks Gigabit Ethernet Switch, Summit 1i
- Cisco Systems, Inc. Gigabit Ethernet Switch, Catalyst 6500 series
- Dell® PowerConnect 5224

If you need to use a different Ethernet switch, it must support the following functional features:

- 1000Base-T Ethernet connections
- 9 KB jumbo frames
- Port-based VLAN
- BootP/DHCP relay

Also, if you need to use a different Ethernet switch, a switch supporting the following features is recommended but not required for normal SpinServer operations:

- Layer 3 routing
- 802.1q VLAN tagging
- Port mirroring

**Note:** Any standard 10/100/1000Base-T Ethernet switch can be used for the network and management port connections.

### Fibre Channel Switches for SAN Connectivity

The following Fibre Channel switches have been tested and certified for interoperability with the SpinServer:

- Brocade Communications Systems, Inc. SilkWorm 3900 32-port, 1 Gbit/sec and 2 Gbit/sec Fibre Channel switch
- Brocade Communications Systems, Inc. SilkWorm 3800 16-port, 1 Gbit/sec and 2 Gbit/sec Fibre Channel switch
- Brocade Communications Systems, Inc. SilkWorm 3200 8-port, 1 Gbit/sec and 2 Gbit/sec Fibre Channel switch
- Brocade Communications Systems, Inc. SilkWorm 2800 16-port, 100 MB/sec Fibre Channel switch
- Brocade Communications Systems, Inc. SilkWorm 2400 8-port, 100 MB/sec Fibre Channel switch

### Certified Backup and Restore Hardware Products

The following hardware equipment has been tested and certified for backups and restorations on the SpinServer:

- ADIC Scalar 100 tape robot (with internal IBM Ultrium TD-1 tape drive)
- Dell PowerVault 110T DLT1 tape drive
- Hewlett-Packard StorageWorks Ultrium 230 tape drive
- IBM TotalStorage Ultrium 3580 tape drive
- Overland Storage Neo series tape robot (with internal HP Ultrium 1 tape drive)
- Quantum DLT 8000 tape drive
- Quantum SDLT 220 tape drive
- Sony SDX-500C tape drive
- StorageTek L20 tape robot (with internal Seagate Ultrium 6242 tape drive)
- A tape library that is certified to work with VERITAS® Software Corporation NetBackup DataCenter 3.4 and 4.5, Legato NetWorker 7.0, or IBM Tivoli Storage Manager 5.2.2.0.
- A standalone tape drive that is certified to work with VERITAS Software Corporation NetBackup DataCenter 3.4 and 4.5, Legato NetWorker 7.0, or IBM Tivoli Storage Manager 5.2.2.0.

## Software Requirements

The following software is required to run, manage, and access the SpinServer system.

### Client Operating Systems

The following CIFS and NFS operating system requirements have been tested and certified for interoperability with the SpinServer:

### CIFS

- Microsoft® Windows® 98, Windows NT® 4.0 (with Service Pack 6a), Windows 2000, Windows XP, Windows 2003 Server, or Microsoft .NET.
- Mac OS X v10.3 (Panther)

### NFS

- AIX 5.1
- HP-UX 11.0
- IRIX 6.5.13 or later
- Red Hat Linux 7.2, with Linux kernel 2.4.9-31 (operational problems can occur when

using other versions of the Linux kernel)

- Solaris 7.0 or 8.0

### File Access Protocols

Your client computers must be running one of the following file access protocols:

- CIFS
- NFS Version 2 or 3

### Backup and Restoration Protocols

For data backup and restoration, the SpinServer supports the following Network Data Management Protocol (NDMP) versions:

- NDMP Version 2.0
- NDMP Version 3.0

### Certified Backup and Restoration Software Product

The following software has been tested and certified for backup and restoration on the SpinServer:

- VERITAS Software Corporation NetBackup DataCenter 3.4 and 4.5
- Legato NetWorker 7.0
- IBM Tivoli Storage Manager 5.2.2.0

### SNMP Trap Destinations

For Simple Network Management Protocol (SNMP) trap destinations, the following SNMP protocols are supported.

- SNMPv1 (Version 1)
- SNMPv2c (Version 2)

### Network Management Solution

The following software has been tested and certified for use with the SpinServer:

- Hewlett-Packard Company HP OpenView Network Node Manager

### Browser

Microsoft Internet Explorer 5.x or 6.x or Netscape Navigator® 6.x or 7.x is recommended for accessing the management software from a browser. For secure access to the SpinManager GUI, the browser must support Secure Sockets Layer (SSL).

### Adobe Acrobat Reader

Adobe Acrobat Reader is required to view Spinnaker documentation in Portable Document Format (PDF). You can obtain a free copy of Adobe Acrobat Reader from www.adobe.com/products/acrobat/.

## 3.13 Tested Equipment

The following equipment has been tested with the SpinServer system and is compatible with the SpinServer components.

### UPS

The following 100-volt, 120-volt, 208-volt, and 230-volt UPS units have been tested for use with the SpinServer system.

- American Power Conversion Corp. (APC) UPS, 100Vac, 1500VA
- American Power Conversion Corp. (APC) UPS, 120Vac, 1000VA
- American Power Conversion Corp. (APC) UPS, 208Vac, 3000VA
- American Power Conversion Corp. (APC) UPS, 230Vac, 1000VA

### AC Transfer Switch

The following 120-volt, 208-volt, and 230-volt AC transfer switch (ATS) units have been tested for use with the SpinServer system.

- American Power Conversion Corp. (APC) ATS, 120Vac, 12A
- American Power Conversion Corp. (APC) ATS, 208Vac, 16A
- American Power Conversion Corp. (APC) ATS, 208Vac, 24A
- American Power Conversion Corp. (APC) ATS, 230Vac, 10A

### Equipment for Backup and Restoration

The following software and hardware equipment has been tested and certified for backup and restoration on the SpinServer:

- VERITAS Software Corporation NetBackup DataCenter 3.4 and 4.5
- Legato NetWorker 7.0
- IBM Tivoli Storage Manager 5.2.2.0
- A tape library that is certified to work with VERITAS Software Corporation NetBackup DataCenter 3.4 and 4.5, Legato NetWorker 7.0, or IBM Tivoli Storage Manager 5.2.2.0
- A standalone tape drive that is certified to work with VERITAS Software Corporation

NetBackup DataCenter 3.4 and 4.5, Legato NetWorker 7.0, or IBM Tivoli Storage Manager 5.2.2.0

In addition, VERITAS Software Corporation in independent tests in their labs has qualified the SpinServer as VERITAS NetBackup compatible.

New backup and restoration products are periodically tested for use with the SpinServer. If you are using other backup products, contact Network Appliance Technical Support to verify compatibility.

### Fibre Channel Bridges, Routers, and Gateways

The following Fiber Channel bridges, routers, and gateways have been tested and certified for interoperability with the SpinServer:

- ATTO Technology, Inc. FibreBridge 1180E
- Advanced Digital Information Corporation (ADIC) Storage Networking Controllers SNC 5100 Fibre Bridge
- Crossroads Systems, Inc. Crossroads 4250 Storage Router

### Equipment for Server Load Balancing

The following equipment has been tested for use with the SpinServer system for server load balancing:

- Extreme Networks Summit 5i Switch

For information about server load balancing, contact Network Appliance Technical Support.

# 4.0 Preinstallation Tasks

This chapter provides assistance in designing storage system topology. It also details the unpacking, handling, and safety guidelines for the SpinServer system components.

**Important:** New SpinServer systems are preconfigured at the factory. The information in this chapter is provided for users of legacy SpinServer systems.

**Important:** New SpinServer systems use FAS270c (RAID) and DS14mk2 (JBOD) storage enclosures, not SpinStor 200 RAID and JBOD enclosures. The examples in this chapter show SpinStor 200 storage, but the principles are applicable to FAS270c and DS14mk12 storage.

## 4.1 Storage System Components

The SpinServer storage system can include the following:

- One or more SpinServers
- One or more RAID disk enclosures attached to the SpinServers or to another RAID disk enclosure
- Optionally, one or more JBOD disk enclosures attached to a RAID disk enclosure or to another JBOD disk enclosure
- A management LAN connection
- A SpinCluster LAN, MAN, or WAN on a secure network

## 4.2 Designing Storage System Topologies

It is important to design the storage system topology before you begin the process of setting up the equipment. The topology includes all of the elements listed in the previous section. This presetup design exercise makes the installation of equipment in the rack and the cabling tasks easier to complete.

## SpinServer Configuration

The SpinServer includes the following:

- One 10/100 Ethernet port (mgmt0) for management of the SpinServer system. This port must be connected to the network that is used to configure and control the SpinServer.
- Two gigabit Ethernet ports for network traffic and client access. These network ports (serv0 and serv1) connect the SpinServer to the clients that are using the SpinServer for data storage.
- Two gigabit Ethernet ports for clustering (clus0 and clus1). These ports connect the SpinServer to other SpinServers for scalability, performance, and failover.
- Two fiber-optic Fibre Channel connectors. These ports connect the SpinServer to the RAID and JBOD disk enclosures that provide the actual physical storage of the data.
- To access the CLI management software, connect a console with a null modem cable to the serial port (COM1).
- With the cable provided by the UPS manufacturer, connect the COM2 port to the UPS computer interface port.

The three types of Ethernet ports (management, network, and clustering) are used to transport very different types of data; it is therefore recommended that you connect them to different networks. For example, connect the management port to a physically secure network that is dedicated to management; connect the network ports to the general corporate network for client access; and connect the cluster ports to a dedicated, secure network for maximum performance and security.

### Simple SpinServer Configuration

In the simplest configuration, the SpinServer management and network ports are connected to the network, and the two Fibre Channel ports are connected to a RAID enclosure. The UPS is connected to the COM2 port of the SpinServer. Do not connect any other equipment to the UPS.

The RAID enclosure includes two RAID controllers and a number of disks (14 in the FAS270c, 16 in the SpinStor 200), as well as the mechanical, electrical, and thermal components necessary for their operation, which is monitored by the SCSI Enclosure Services (SES) manager. The SES manager reports the operational status of the disks to the RAID controllers.

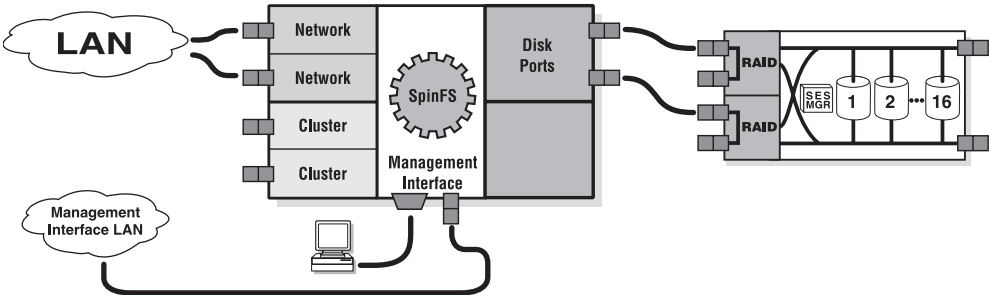


Figure 4-1. Single SpinServer topology

The SpinServer management port is connected to a console with a null modem cable to access the SpinManager CLI.

### Clustered SpinServer Configuration

In a larger, clustered configuration, the management ports are connected to their own isolated management network for security purposes. For performance and security, the cluster ports are connected through dedicated gigabit Ethernet switches, and the Fibre Channel ports are connected to the RAID enclosures to provide the desired storage capacity. Figure 4-2 displays one option for RAID connectivity in a cluster.

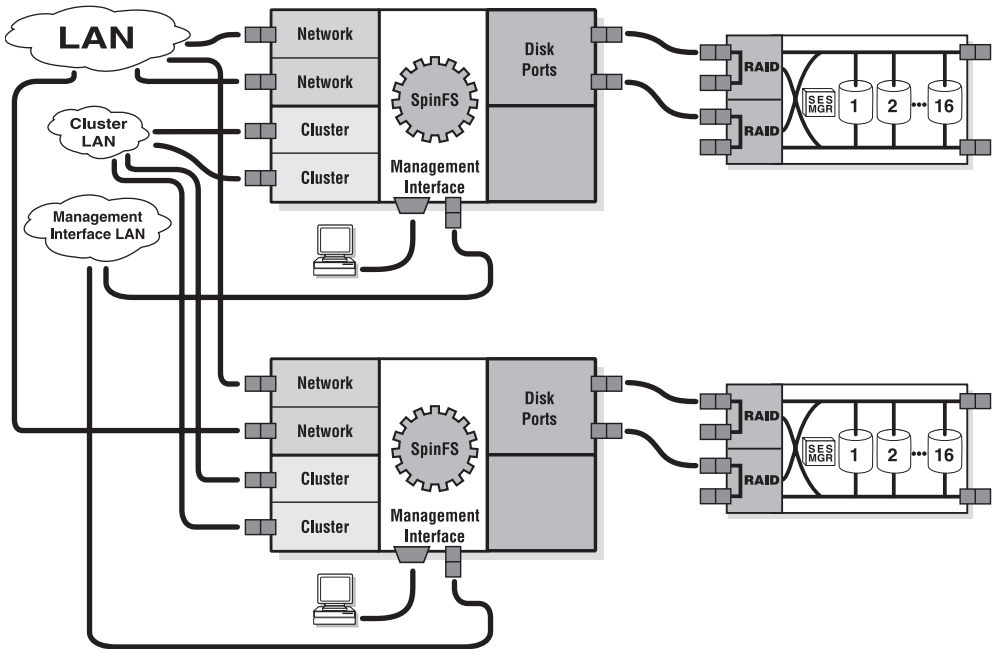


Figure 4-2. Cluster with two nodes

Note that this configuration provides only clustering, not high availability or robust expandability. Additional SpinServers can be added to the cluster, but the number of additional RAID enclosures that can be added to each SpinServer is limited. For more information about designing configurations that include high availability and expandability, see “High Availability Configurations” on page 45 and “Designing Topologies for Expandability” on page 49.

## RAID Configuration

The RAID enclosures include two RAID controllers that provide redundancy and flexibility in making connections to the SpinServer.

### Dual RAID Controllers

The two RAID controllers enable the RAID enclosure to be connected to the SpinServer by using two separate Fibre Channel ports. The use of pairs of RAID controllers, connected separately, improves performance and reliability in addition to providing redundancy and flexibility of connections to the SpinServers in the system.

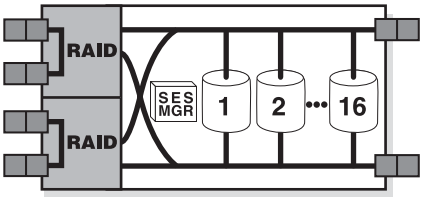


Figure 4-3. RAID connections to other system components

Connections between the SpinServer and the RAID enclosure are made with fiber-optic cables that plug into the Fibre Channel ports on the SpinServer and into the fiber-optic SFP GBICs on the RAID enclosure. A GBIC is an interchangeable connector that converts fiber-optic or electronic signals into a standard electrical form.

In addition to the two fiber-optic GBICs (one for each RAID controller), the RAID controller enclosure has two copper GBICs that connect the RAID enclosure to a chain of up to six JBOD enclosures. Together, the RAID enclosure, plus its connected JBOD enclosures, form a storage system that can control up to 112 disks.

### SpinServer to RAID Connections

The SpinServer is equipped with two fiber-optic Fibre Channel ports. Each of these ports connects directly to a RAID enclosure. Additional RAID enclosures can be connected to the RAID enclosures that are directly connected to the SpinServer. Any number of RAID enclosures can be attached to a single SpinServer, but any given RAID enclosure can have only six JBOD enclosures attached to it.

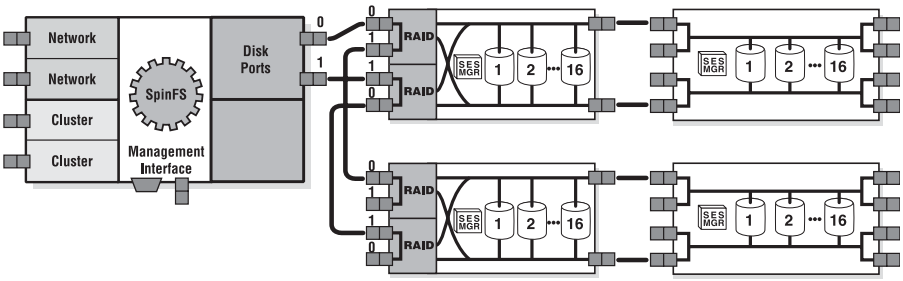


Figure 4-4. Server-to-RAID connections and the interconnections among two RAID and two attached JBOD enclosures

A basic configuration with one SpinServer, two RAID enclosures, and two JBOD enclosures is shown in Figure 4-4. Note that this configuration does not provide unlimited expandability; additional RAID enclosures can be attached to the RAID enclosures that are connected directly to the SpinServer, but only one additional SpinServer can be added. See “Designing Topologies for Expandability” on page 49 for information about expandability.

## JBOD Configuration

The JBOD enclosures include a number of disks (14 in the DS14mk2, 16 in the SpinStor 200), as well as the mechanical, electrical, and thermal components necessary for their operation.

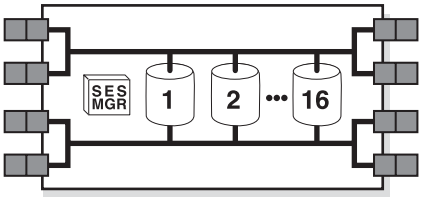


Figure 4-5. JBOD connections to other system components

The JBOD enclosures connect to the RAID enclosure and to one another. They do not connect directly to the SpinServer.

JBOD enclosures are expansion enclosures and are used to add additional disks to those controlled by the RAID controllers in a RAID enclosure, as shown in Figure 4-6. They are equipped with four copper GBICs that enable the expansion enclosure to be connected to a RAID enclosure in two independent chains, improving reliability.

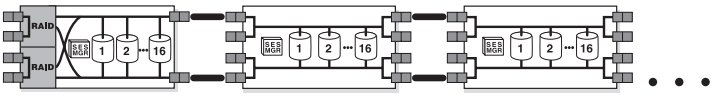


Figure 4-6. JBOD-to-RAID enclosure connections

Two GBICs are connected to the RAID enclosures by using copper Fibre Channel cables. To increase capacity, one or more additional JBOD enclosures can be connected to other JBOD enclosures by using the two remaining GBICs and copper Fibre Channel cables.

## High Availability Configurations

SpinHA provides disk access failover if a SpinServer in a system fails. High availability (HA) configurations require two or more SpinServers and are designed to provide the system with resiliency and easy system expansion.

**Note:** All SpinServers sharing responsibility for a storage pool must be configured into the same cluster.

### Resiliency

The goal of all HA configurations is to provide a system that has no single point of failure. In HA configurations, two or more SpinServers share responsibility for a particular storage pool. If one SpinServer fails, the other SpinServer automatically takes control of its disks and continues system operations without losing any committed data.

### Redundancy

Redundancy is an essential feature of an HA configuration. When properly configured, the system continues operating normally even if any of the following components fails:

- A SpinServer chassis
- Either of the disk ports in a SpinServer chassis
- A Fibre Channel cable or GBIC
- A Fibre Channel switch
- A RAID controller
- A disk (if it is part of a redundant RAID set)
- Any of the other redundant components, such as power supplies and fans

In many cases, multiple component failures can be tolerated if the system configuration is properly designed for redundancy.

**Note:** All of the HA configurations described in this section include all of the network connectivity that is detailed in Figure 4-2.

### High Availability with Two SpinServers and One RAID Enclosure

The most basic high availability configuration, shown in Figure 4-7, is a system with two SpinServers, both of which are attached to the same RAID disk enclosure. In this configuration, two disk ports from each SpinServer are connected to the RAID enclosure, one to each RAID controller. This is the simplest configuration that provides redundancy for the SpinServer, disk port, Fibre Channel, and RAID controller.

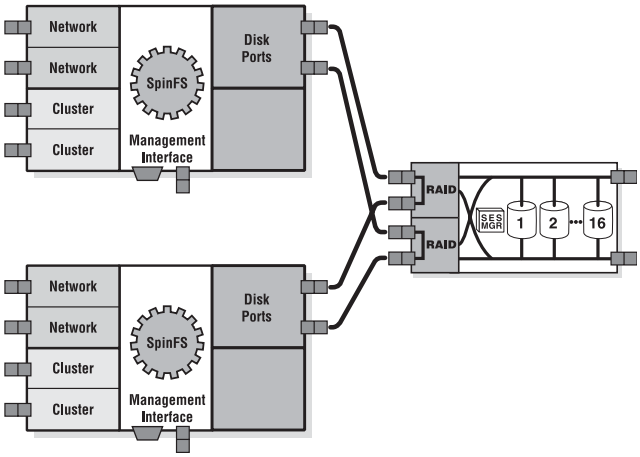


Figure 4-7. High availability with two SpinServers and one SpinStor 200 RAID disk enclosure

Note that this configuration provides 1+1 failover for high availability but limited options for expandability. Additional RAID enclosures can be attached to the RAID enclosure that is connected directly to the SpinServers, but additional SpinServers cannot be added to the configuration. See “Designing Topologies for Expandability” on page 49 for more information about expandability.

### High Availability with Two SpinServers and Two RAID Enclosures

In the HA configuration shown in Figure 4-8, another RAID enclosure, using the SpinServer disk ports that are available, is added to the previous example. This adds storage capacity and maintains redundancy for the SpinServer, disk port pair, Fibre Channel, and RAID controller.

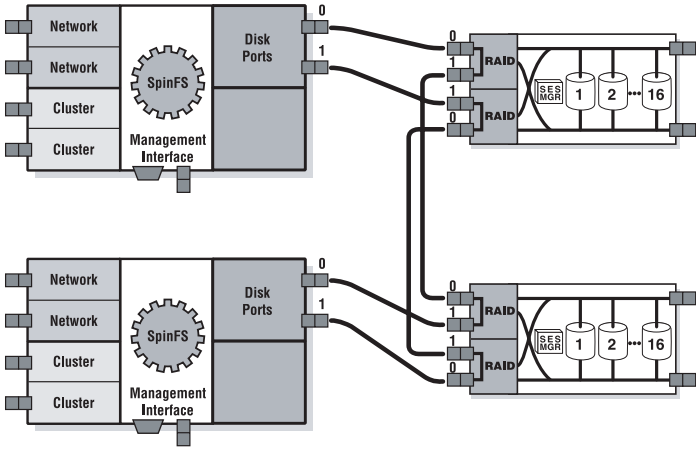


Figure 4-8. High availability with two SpinServers and two SpinStor 200 RAID disk enclosures

This configuration provides 1+1 failover for HA. For expandability, you can attach additional RAID enclosures to the RAID enclosures that are connected directly to the SpinServers; however, you cannot add additional SpinServers.

### High Availability with Two SpinServers, Two RAID Enclosures, and Switches

In the HA configuration example shown in Figure 4-9, two Fibre Channel switches are added to simplify connectivity and add expandability. Two separate switches are needed to maintain redundancy. System operations continue even if one of the switches fails.

This configuration meets all resiliency requirements for HA. It is also easy to expand. Additional SpinServers and RAID enclosures can be added indefinitely, limited only by the number of ports on the switches. However, this configuration uses only half of the available Fibre Channel ports.

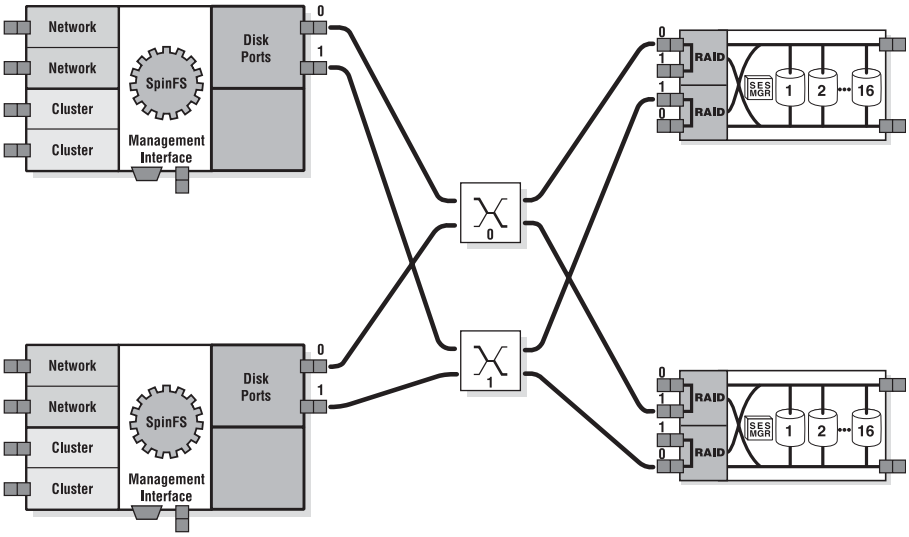


Figure 4-9. High availability with two SpinServers and two SpinStor 200 RAID enclosures

### High Availability with Two SpinServers and Four RAID Enclosures

In the HA configuration example shown in Figure 4-10, one SpinServer is connected to a single RAID enclosure, which is connected to another RAID enclosure. The second RAID enclosure is connected to a third RAID enclosure. The third RAID enclosure is connected to a fourth RAID enclosure, which is connected to a second SpinServer.

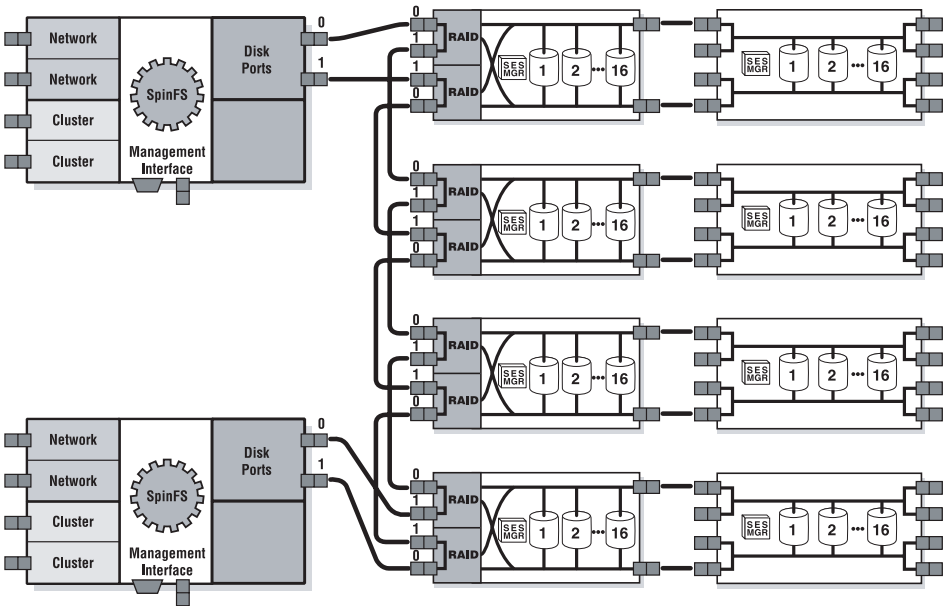


Figure 4-10. High availability with two SpinServers and four SpinStor 200 RAID enclosures

This configuration provides 1+1 failover for high availability but has limited options for expandability. Additional RAID enclosures can be added to the configuration, but the lack of available ports requires extensive recabling to add additional RAID enclosures. Additional SpinServers cannot be added.

# 4.3 Designing Topologies for Expandability

It is important to use a standard pattern for component connectivity when designing a system for expandability. If you use a standard pattern, adding new connections is simple and orderly. All of the preceding examples adhere to the following guidelines:

- There is exactly one path from each SpinServer to each RAID controller. This is a requirement whether or not you are using Fibre Channel switches.
- There are two paths from each SpinServer to each RAID enclosure, one to each of the RAID controllers.
- Each path uses one SpinServer disk port.
- Each path uses a different switch.

If these guidelines are followed, the failure of a disk port, any single Fibre Channel cable, or even an entire switch does not prevent the SpinServers from continuing to access the RAID enclosures.

A basic expandable system is shown in Figure 4-11. This system includes one SpinServer, two RAID enclosures, and two Fibre Channel switches (or one Fibre Channel switch that is set up to provide two zones). Additional SpinServers and RAID enclosures can be added to the configuration, and additional RAID enclosures can also be attached to the RAID enclosures that are connected to the SpinServer through the switches.

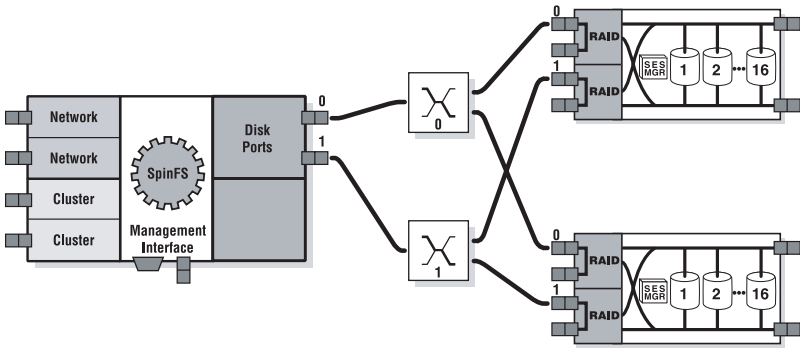


Figure 4-11. A basic expandable SpinServer system

## Assigning IDs to SpinServer System Components

To prepare for the orderly expansion of the previous HA example, numeric labels are added to the Fibre Channel ports and switch zones, as shown in Figure 4-12.

Each of the two SpinServers has two disk ports, labeled 0 and 1. The zones in the two switches are also numbered 0 and 1. The disk port labeled 0 on each SpinServer is connected to the switch zone labeled 0, and the disk port labeled 1 on each SpinServer is connected to the switch zone labeled 1. On each RAID enclosure, one of the ports labeled 0 is connected to the switch zone labeled 0, and one of the ports labeled 1 is connected to the switch zone labeled 1. This configuration leaves ports open on the disk enclosures for connections to other RAID enclosures or other switches.

This topology design meets all of the HA guidelines that are described in the previous sections.

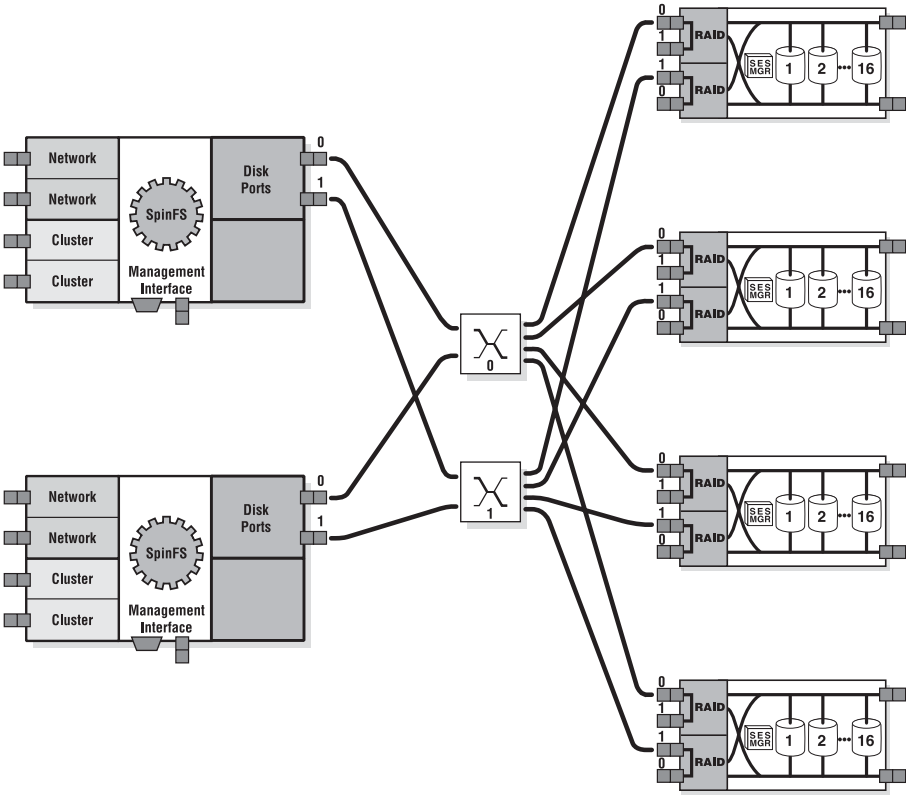


Figure 4-12. Assigning IDs to the SpinServer system components in the topology design

## Expanding the Topology

To expand the system illustrated in Figure 4-12, a third SpinServer can be added, as shown in Figure 4-13. Connect the ports to the zones as described in the previous section. Additional SpinServers can be added in the same manner.

As components are added, the zoned switches can run out of ports. When that happens, each zone can be replaced with an independent switch, doubling the number of available ports.

Using these expansion guidelines, you can easily add additional SpinServers and RAID enclosures, and can quickly connect the system components.

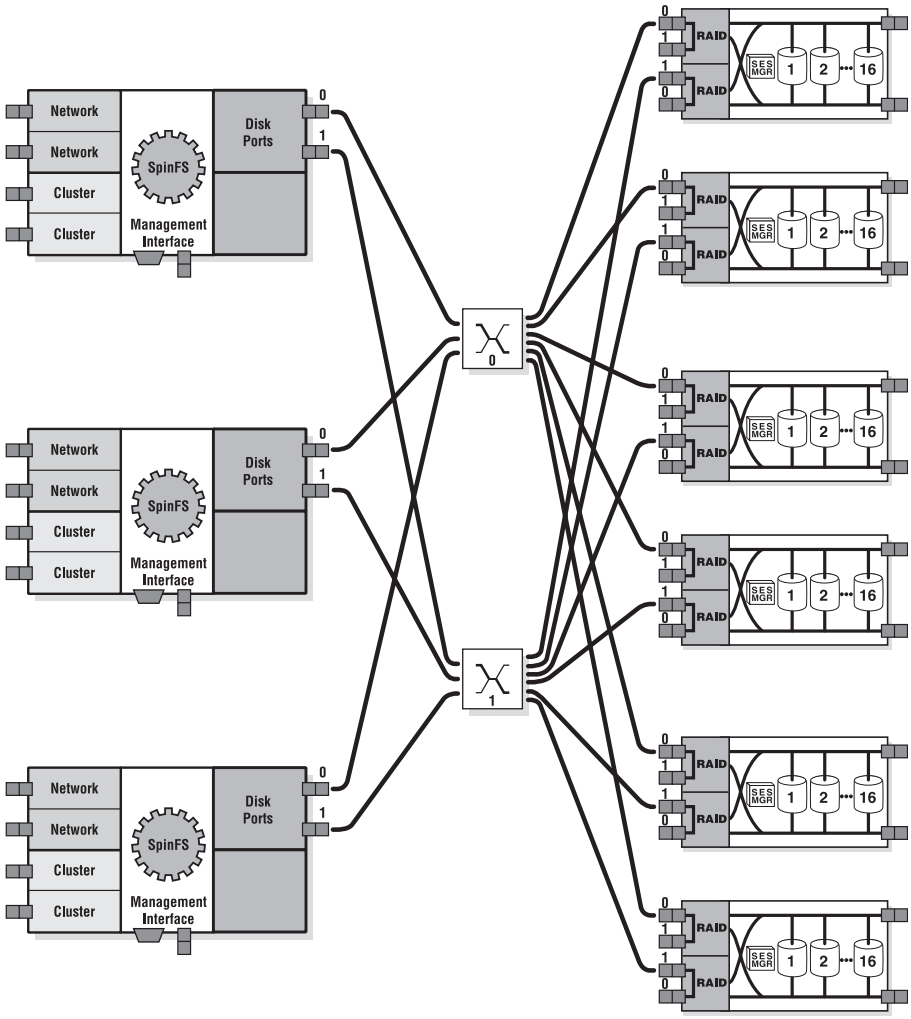


Figure 4-13. Expanding the topology to include an additional SpinServer and two additional SpinStor 200 RAID enclosures

The configuration shown in Figure 4-13 can alternatively be set up so that additional RAID enclosures are attached to the RAID enclosures that are connected to the SpinServers through the switches. This setup can be used if you need to conserve switch ports. However, the alternative setup is more complicated to implement and can possibly have a minor adverse effect on performance.

## 4.4 Unpacking and Handling Components

To prevent damage to the components and avoid injury, you must carefully unpack and handle the SpinServer chassis and disk enclosures.

Inspect the box the components were shipped in and note whether the components were damaged in any way. If the components show evidence of damage, file a damage claim with the carrier who delivered it.

## 4.5 Product Guidelines

Guidelines for safe handling and maintenance of the SpinServer components are listed in this section.

### Static Electrical Discharge Precautions

Static electricity is generated when two objects with different electrical charges come into contact with each other. An electrostatic discharge (ESD) is created to neutralize this difference. Electronic devices can be severely damaged by ESD.

To prevent damage to the equipment from ESD, follow these precautions:

- Do not unpack or install electronic equipment without using a properly grounded wrist or heel strap.
- Keep all electronic assemblies such as printed circuit boards (PCBs) and disk drives in their original ESD-protective packaging until you are ready to install them.
- Handle all electronic assemblies carefully. Do not touch connectors, contacts, or component leads.
- Ensure that electronic assemblies do not come in contact with insulators such as clothing and plastics.

### Laser Radiation Precautions

The SpinServer and the SpinStor 200 emit invisible laser radiation.

**Warning**: CLASS 1 LASER PRODUCT

**Warning**: Lasers emit invisible radiation from the aperture opening when no fiber-optic cable is connected. When removing cables, do not stare into the open apertures. In addition, install protective aperture covers to fiber ports with no cable connected.

## Electrical Precautions

To prevent serious damage to yourself and the SpinServer components, always observe basic electrical precautions, including the following:

- Use only one hand when working with powered-on electrical equipment. This is to avoid making a complete circuit, which causes electrical shock. Use extreme caution when using metal tools, which can easily damage any electrical components or circuit boards they touch.
- Do not use mats designed to decrease static electrical discharge as protection from electrical shock. Instead, use rubber mats that have been specifically designed as electrical insulators.
- Call Network Appliance Technical Support when the battery near the DIMM modules in the SpinServer chassis, which maintains clock settings during power failure, needs to be replaced. Improper installation causes damage to the equipment.

**Caution:** There is a risk of explosion if the battery is replaced by an incorrect type or is inserted incorrectly. Dispose of used batteries according to the instructions.

## Electrical Warnings

To prevent serious injury to yourself and damage to the SpinServer components, always observe the following electrical warnings:

**Warning:** Never apply AC power to, or operate, equipment without proper earth grounding. Equipment installations must comply with all applicable local, state, and national electrical codes and regulations. Contact a qualified electrician if you are unsure about the proper earth grounding of equipment, power distribution units (PDU), and equipment racks.

**Warning:** Due to accumulation of leaked current, Network Appliance recommends that industrial locking type plugs and receptacles are used for power strips, PDUs, and UPSs that supply power to multiple pieces of equipment. These types of robust connections ensure the integrity of the protective earth ground.

**Warning:** Power distribution, earth grounding systems, equipment, and equipment rack installations must comply with all applicable local, state, and national electrical codes and regulations.

**Warning:** Always connect SpinServer AC line-powered equipment only to TN type power systems.

**Warning**: To prevent injury when performing maintenance on a powered-down SpinServer, disconnect the power cords from all AC inlets before opening the cover of a server chassis.

**Warning**: Be aware of the locations of the power on/off switch on the chassis, as well as the room's emergency power off switch, disconnection switch, or electrical outlet. If an electrical accident occurs, quickly remove power from the system.

**Warning**: When working with high voltage components or exposed electrical circuits, do not work alone. Be sure to have another person nearby who is familiar with the power controls to switch off the power if necessary.

**Warning**: Use only power cords with a grounding plug. Always plug the cords into grounded electrical outlets.

**Warning:** The SpinServer product has a *Power-On/Standby* power switch. *Power-On/Standby* power switches, when in the *Standby* position, do not completely remove AC power from the equipment. For equipment with this type of power switch, the AC power cords serve as the main disconnect device. When performing maintenance that requires the equipment to be completely powered down, put the power switch in the *Standby* position, and remove all power cords from the equipment.

**Warning:** Some equipment is provided with multiple power cords. To disconnect all power from the equipment, remove all power cords.

**Warning:** To avoid potential burns, remove all chains, rings, watches, and other metal jewelry when performing maintenance on powered-on equipment. Burns can be caused by the flow of current through a metallic object if the metallic object comes in contact with powered circuits.

**Warning:** The power supply units for SpinStor 200 products have detachable power cords. Disconnect the power cord at the power supply unit before removing the power supply unit from the enclosure. When installing a power supply unit, insert the power supply unit into the enclosure before connecting the power cord.

## SpinServer System Precautions

To ensure general safety, follow these guidelines.

- Keep the area around the SpinServer system clean and free of clutter.
- When servicing the SpinServer, place the top cover of the server chassis and any system components that have been removed in a safe location to avoid damaging them.
- Use a UPS to protect the SpinServer from power surges and voltage spikes and to keep the system operating in the event of a power failure.
- Do not wear jewelry or other metal objects that are excellent conductors. If such items come into contact with circuit boards or areas where power is present, a short circuit can be created.
- Before replacing any components that are not hot swappable, power down the SpinServer and disconnect all AC power cords. After accessing the interior of the SpinServer, close the top cover securely, slide the chassis back into position, and fasten the screws on the front panel to the rack.

## SpinServer System Warnings

To prevent serious injury to yourself and damage to the SpinServer components, always observe the following warnings:

**Warning:** During normal operations, the internal components of the SpinServer and SpinStor 200 become hot. During service operations, avoid touching hot surfaces.

## Rack Precautions and Warnings

See the *42U System Cabinet Guide* for precautions and warnings on the equipment cabinet.

**Warning:** To reduce the risk of personal injury or damage to equipment, it is important to install heavy components first and install them at or near the bottom of the rack.

# *Part III: Hardware Installation*

Part III includes the following chapters:

**Chapter 5: Setting Up the Rack**

"Setting Up the Rack" on page 59 provides information about unpacking and setting up a legacy Spinnaker equipment rack.

**Chapter 6: Installing the UPS**

"Installing the UPS" on page 77 provides information about installing the UPS in the equipment rack.

**Chapter 7: Installing the SpinServer**

"Installing the SpinServer" on page 79 provides information about installing the SpinServer in the equipment rack.

**Chapter 8: Installing the SpinStor 200**

"Installing the SpinStor 200" on page 91 provides information about installing the SpinStor 200 in the equipment rack.

**Chapter 9: Setting Disk IDs and Installing Cables**

"Setting Disk IDs and Installing Cables" on page 103 provides detailed information about setting the IDs for the SpinStor 200 JBOD disk enclosures and basic instructions for installing cables to connect SpinServer system components.

**Chapter 10: Clustering and HA Connections**

"Clustering and HA Connections" on page 115 provides information and illustrations that demonstrate the physical connections needed to set up the SpinServer system components for clustering and HA.

**Chapter 11: Power Connections**

"Power Connections" on page 121 provides information and illustrations that demonstrate power connections for SpinServer system components.

**Chapter 12: Powering Up the System**

“Powering Up the System” on page 129 provides information about powering up the SpinServer system components.

**Chapter 13: Powering Down the System**

“Powering Down the System” on page 135 provides information about powering down the SpinServer system components.

# 5.0 Setting Up the Rack

This chapter discusses the equipment racks used for the SpinServer system's equipment.

**Important:** The information in this chapter applies only to equipment racks provided with legacy SpinServer systems. New SpinServer systems use Network Appliance system cabinets; see the *42U System Cabinet Guide* for information.

When installing equipment in the rack, always observe the following safety warnings:

**Warning:** Extend only one rack component at a time. Extending two or more rack components simultaneously can cause the rack to become unstable and tip over, causing serious injury and damage to equipment.

**Warning:** To reduce the risk of personal injury or damage to equipment, it is important to install heavy components first and install them at or near the bottom of the rack.

## 5.1 Equipment Racks

### Spinnaker Racks

Spinnaker racks have the following functional and safety features:

- The width and depth dimensions are sufficient to accommodate the SpinServer components. The depth of the rack is 36 inches, and the mounting flanges conform with EIA-310-D and IEC 297 standards for a 19-inch rack.
- The holes in the interior vertical rack rails are standard 3/8-inch square holes.
- Interior vertical rack rail holes are positioned along standard Unit (U) intervals (1 U = 1.75 inches). Each unit of vertical space comprises three holes that conform with universal spacing as detailed in the EIA-310-D standards. An anti-tip plate can be

attached to prevent the rack from tipping when fully loaded.

- The rack can hold 42U of equipment.
- The overall height of the rack with casters is 80 inches.
- The load capacity of the rack is sufficient to handle the weight of the components even when completely loaded with SpinServer components.
- Both rack casters and rack levelers are provided to ensure ease of movement and to position the rack safely when it is placed in a permanent location.
- The rack is provided with locking doors and side panels.
- The rack can be ordered as a 120VAC rack or as a 208VAC rack.

### Non-Spinnaker Racks

If you supply your own equipment rack, it must meet the functional and safety features listed above and conform to the following standards:

- International Electrotechnical Commission (IEC) standards: 297-1 and 297-2. For further information about the IEC standards, see the web site www.iec.ch.
- Electronics Industries Association (EIA) standard: EIA-310-D.

## 5.2 Designing the Rack Layout

It is important to design your equipment rack layout before you begin the process of setting up the rack and installing the SpinServer components. This preliminary design work allows you to make the best use of the rack space and features. Make a sketch or a spreadsheet of the layout design for each rack and the equipment to be installed in it.

## Unit Size

The height of the equipment to be installed in an equipment rack in measured in units (U). As shown in this illustration, each 1U is equal to three holes on the rack's vertical rails and 1.75 inches or 4.45 cm.

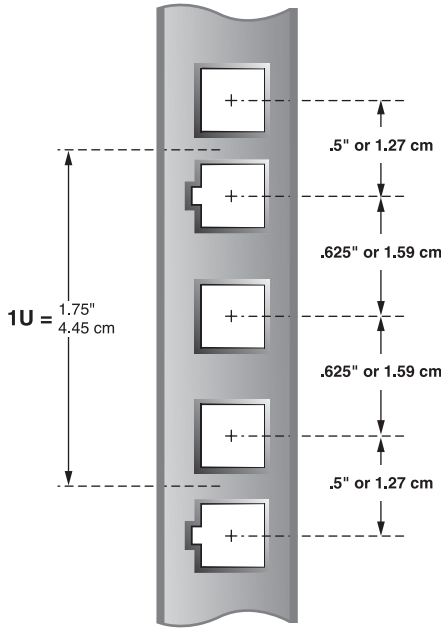


Figure 5-1. This illustration demonstrates the relationship between rack units (U) and inches or centimeters.

## Single Rack Layout

When developing a rack layout design using a single rack, position the system's equipment in the rack to make the rack stable and to minimize rack space that is left unused at the top or the bottom of the rack.

You must also take into consideration the aggregate power distribution and heat dissipation requirements of the SpinServer system components that are installed in the rack. Refer to "Product Specifications and Requirements" on page 11 to review the power and environmental requirements for each component that will be installed in the rack. From this data, you can develop the aggregate requirements. See "Setting Disk IDs and Installing Cables" on page 103 for additional information.

## Multiple Rack Layout

If the system includes more equipment than can be installed in one rack, the first step in designing a rack layout is to divide the equipment into equipment groups that best serve your needs. One possible layout design installs all SpinServers and UPSs in one rack and all SpinStor 200 RAID and JBOD enclosures in a second rack. Another possible layout design follows the layout illustrations in this chapter and installs the equipment as a balanced number of SpinServers and SpinStor 200 enclosures in each rack.

After designing the rack layouts for a multiple rack system, assign a rack ID to each rack by giving the rack a name or a number.

## Rack Voltage

If you are using a Spinnaker rack, you must select the AC voltage that is to be used within the rack. Spinnaker racks use either 120VAC or 208VAC voltage. The rack voltage is determined by the type of power distribution unit (PDU) that is preinstalled in the rack.

If the rack layout includes one or two SpinServers, the 120VAC rack provides adequate power. For a rack layout with three SpinServers, you must use a 208VAC rack to provide adequate power.

**Important:** If these voltages are not compatible with your installation, contact Network Appliance Technical Support.

## Rack PDUs

As shown in the following illustration, the Spinnaker rack has four PDUs, and each PDU has a circuit breaker.

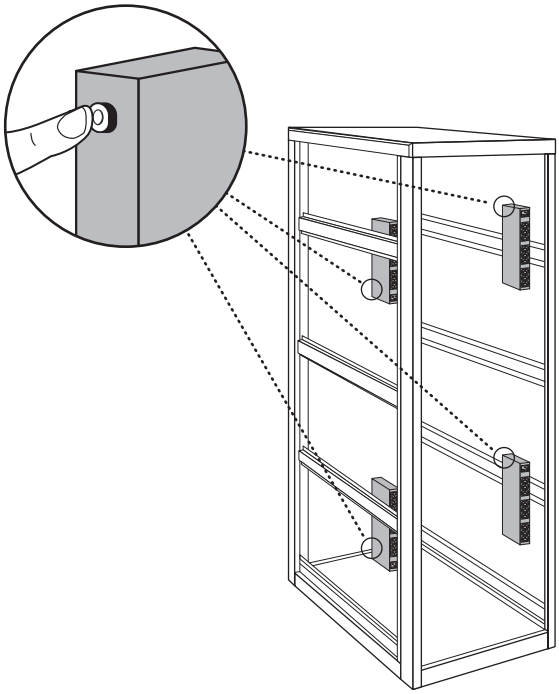

Figure 5-2. Spinnaker rack with PDUs

A circuit breaker is tripped if there is a power overload. To reset the circuit breaker, press the button on the PDU.

**Note:** If access is limited to the circuit breaker from the rear of the rack, remove the side panel of the rack to reach the circuit breaker button.

## SpinServer Components in the Rack Layout Design

When designing a rack layout, use the following information about the SpinServer, SpinStor 200, UPS, and AC transfer switch to create a design that efficiently uses the rack space.

### SpinServer

When designing the equipment rack layout, consider the positioning of the SpinServer components in the rack first. For ease of use, position the server chassis in the midsection of the rack. This enables you to easily remove the cover and access the interior of the chassis when maintenance is required. As shown in the following illustration, the SpinServer requires 4U of vertical space in the rack.

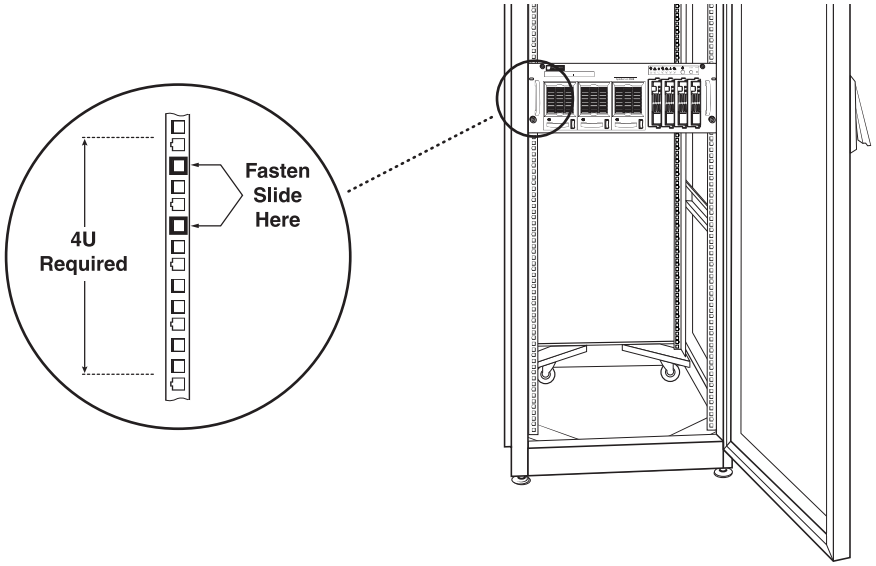


Figure 5-3. The SpinServer requires 4U of vertical rack space.

Each SpinServer in the layout design must be attached to a UPS. If you are designing a rack layout to include more than one SpinServer, the layout design must include a UPS for each SpinServer in the rack.

For layout designs that include one or two SpinServers and two to four SpinStor 200 enclosures, the 120-volt UPS can be used.

Try to position the SpinServers in the rack to minimize the need to relocate the SpinServers and SpinStor 200 enclosures when expanding the system. With this in mind, note that the U-spacing between the bottom of the lowest SpinStor 200 enclosure (3U) and the top of the upper 120-volt UPS (2U) is not a multiple of 3U. This means that you must relocate the SpinServers in the rack to avoid wasting rack space if you increase storage capacity by adding additional SpinStor 200 enclosures.

For layout designs that include more than two SpinServers and an equal number of SpinStor 200 RAID enclosures, the 208-volt UPS (3U) must be used, and the Spinnaker rack with the 208-volt PDU is needed.

### SpinStor 200

A fully loaded SpinStor 200 enclosure is very heavy (approximately 81 pounds). If possible, place the disk enclosure low in the rack or evenly distribute these components above and below the server chassis. For example, if there are two disk enclosures, place one above the server and one below, or place both below the server.

If there are three SpinStor 200 enclosures, place one above the server and two below, or place all three below the server if there is sufficient rack space.

Each SpinStor 200 enclosure requires 3U of rack space. The disk enclosure can be placed above or below the SpinServer in the rack.

**Note:** The enclosure shelf assemblies for the disk enclosure installation are shorter in height than the disk enclosure itself. A full 3U of vertical height for the disk enclosure is required.

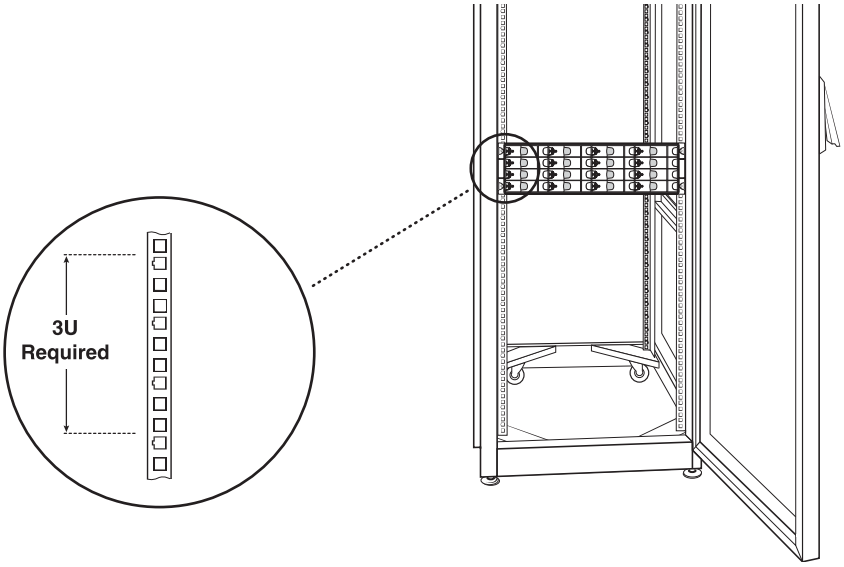


Figure 5-4. The disk enclosure requires 3U of vertical rack space.

### UPS

Despite its low height (2U for the 120 volt and 3U for the 208 volt), the UPS is heavy. It must be placed at the bottom of the rack.

### UPS, 120 volt

As shown in the following figure, because of its weight, the 120-volt UPS is placed at the bottom of the rack and requires 2U of rack space.

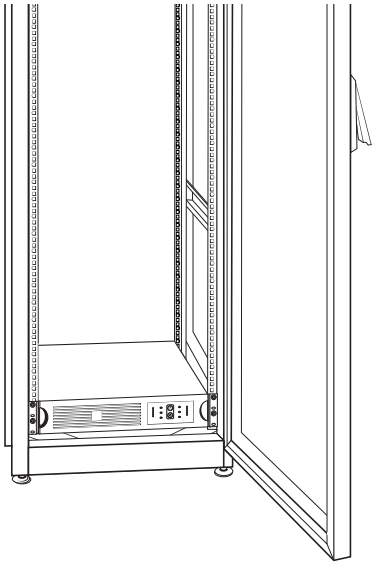

Figure 5-5. The UPS is placed at the bottom of the rack. The 120-volt UPS requires 2U of vertical rack space.

### UPS, 208 Volt

Because of its weight, the 208-volt UPS is also placed at the bottom of the rack. It requires 3U of rack space.

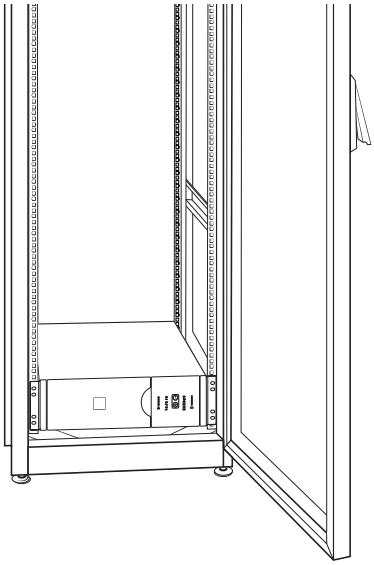

Figure 5-6. The UPS is placed at the bottom of the rack. The 208-volt UPS requires 3U of vertical rack space.

## Layout Examples

The following illustrations demonstrate equipment rack layouts that provide easy access to the server chassis and adhere to the safety guidelines for evenly distributing the weight of the equipment in the rack.

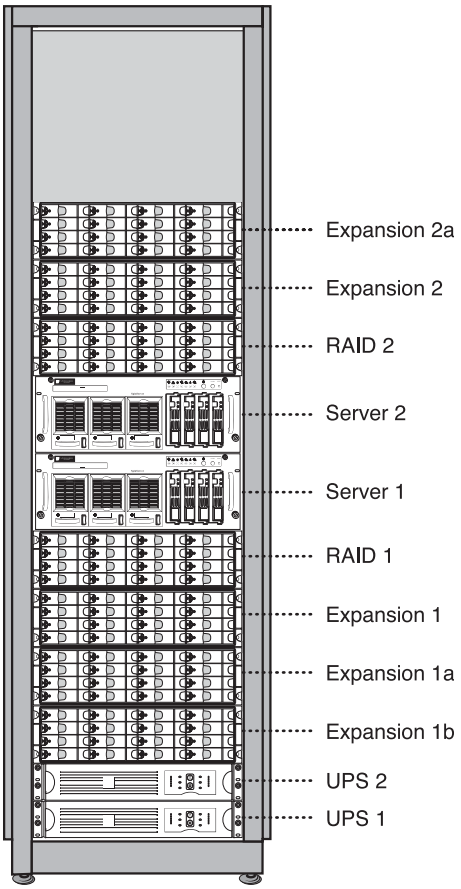


Figure 5-7. A recommended rack layout design with 120-volt UPSs

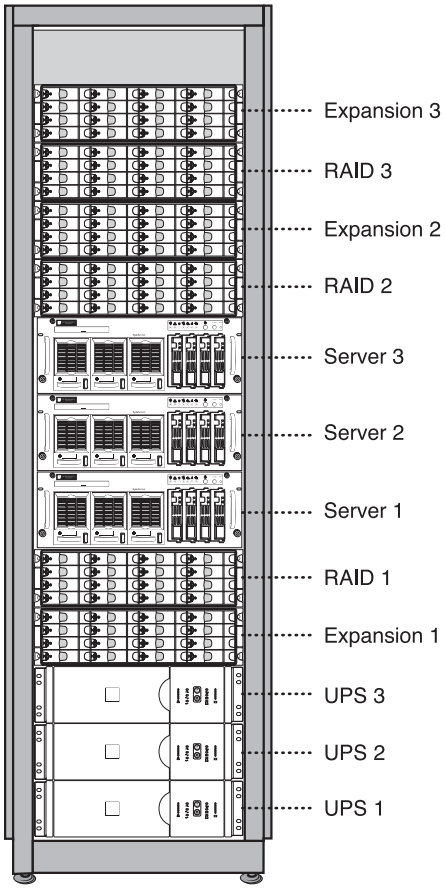


Figure 5-8. A recommended rack layout design with 208-volt UPSs

## 5.3 Setting Up a Spinnaker Rack

To set up a Spinnaker rack, follow these basic steps. Each of the steps involves several substeps, which are discussed in detail in the following sections.

1. Unpack the rack
2. Remove the front and back doors and side panels from the rack.
3. Remove the rack from the pallet.
4. Adjust the position of the vertical rack rails.
5. Mark the positions of the components on the rack.

## Unpacking the Rack

To unpack the rack, follow these steps and cautions:

1. Before unpacking the rack, inspect the rack packaging for any signs of damage that occurred during shipment.

2. When unpacking the rack, take care to prevent scratching the surfaces of the rack.

3. After removing the shrink wrap, remove the other protective packing materials that are wrapped around the rack.

4. Inspect the entire rack for damage. If the rack shows any damage, immediately contact your carrier.

## Removing Rack Doors

To remove the doors from the rack, follow these steps:

1. Locate a temporary storage area for the doors where they cannot slide or accidentally fall over, causing possible injury to workers or damage to the doors.

2. Press the keyhole push-button and pull the handle towards you. Rotate the handle to the right (clockwise) and pull open the door.

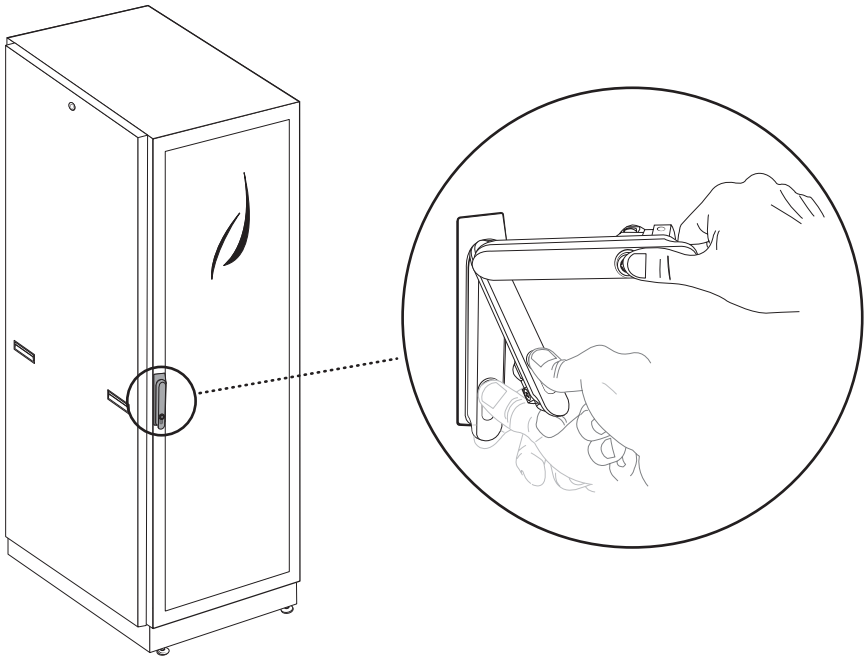

Figure 5-9. This illustration demonstrates the rotating handle on the doors of Spinnaker racks.

3. With the door open approximately 30°, lift the door up to clear the three hinge pins, and carefully pull the door away from the hinge pins and the rack.

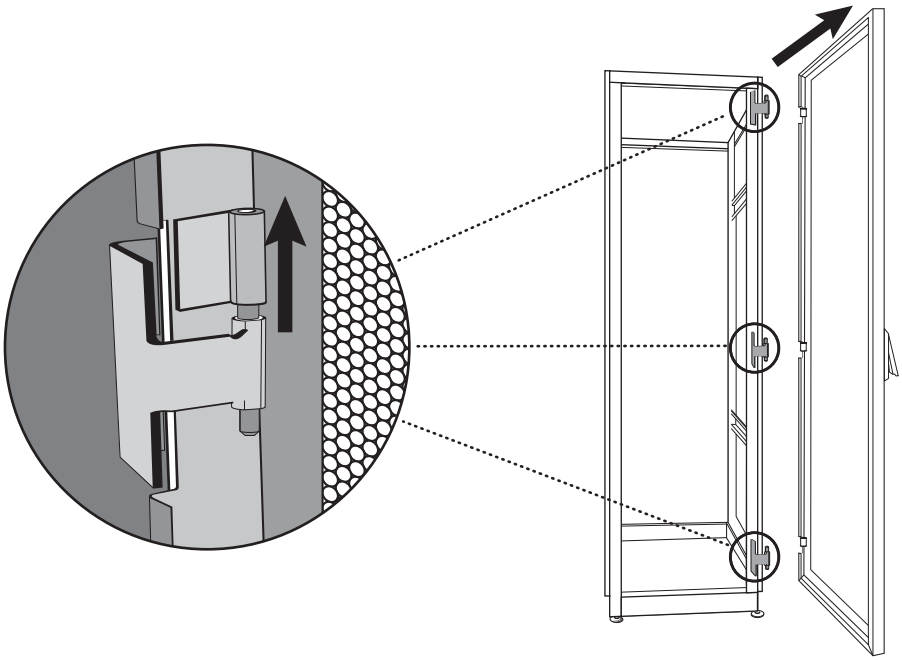

Figure 5-10. Lift the door up and away from the hinge pins.

4. Store the doors in the safe location until you are ready to replace them.

## Removing Side Panels

After removing the front and back doors of the rack, remove the side panels.

1. To remove the panels, remove the two screws that secure the panels during shipment. These two screws are tagged with notices that they must be removed. One screw is at the top of each side panel, and the other is at the bottom of each side panel.

2. Remove the side panel keys from inside the rack and unlock the side panels. Place the keys in a safe location.

3. Grasping the side panel of the rack, pull it away from the rack to disengage the holding clips.

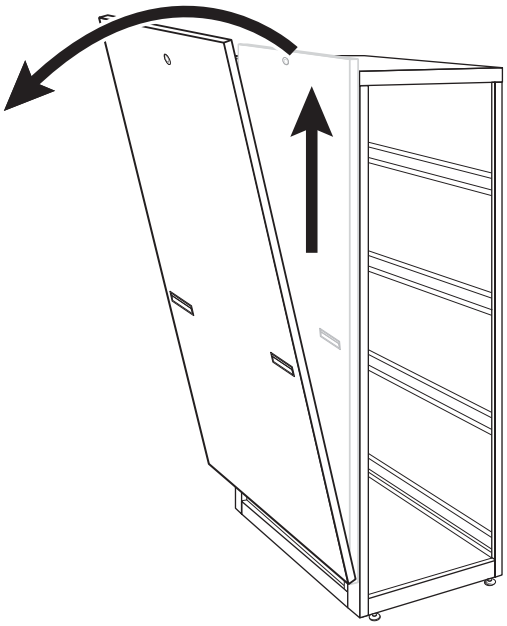

Figure 5-11. To remove the side panels of the Spinnaker racks, grasp the top of the panel and pull it away from the rack.

4. After removing both panels, place them in a safe location.

## Removing Stabilizing Plates

There are two particle-board stabilizing plates that protect the structural integrity of the rack as it is shipped. Remove these plates by following these steps:

1. Remove the four screws that hold each plate in place.

2. Remove the plates from the rack.

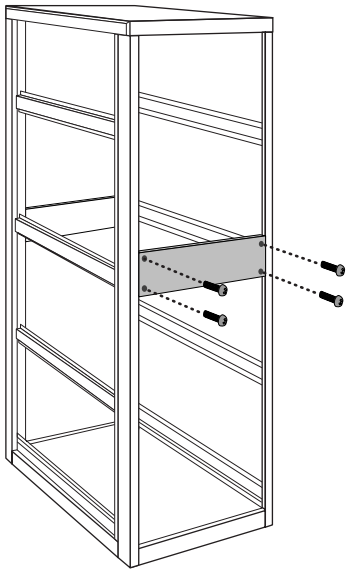

Figure 5-12. Remove the stabilizing plates from the rack.

3. Remove the four clip nuts that held the screws in place for each plate.

4. If the rack is not going to be reshipped to another location, the stabilizer plates can be discarded.

## Removing the Rack from the Pallet

The rack is secured to the pallet by two large metal brackets. Follow these steps to remove the rack from the pallet.

1. Remove the screw from each bracket.

2. Remove both brackets from the rack and pallet.

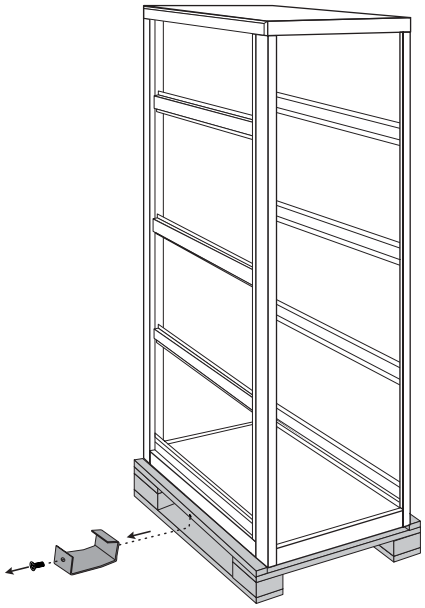

Figure 5-13. Remove the pallet brackets.

3. With at least two people working together, carefully lift the rack off the pallet and move it to the work area to begin installation of the SpinServer system equipment.

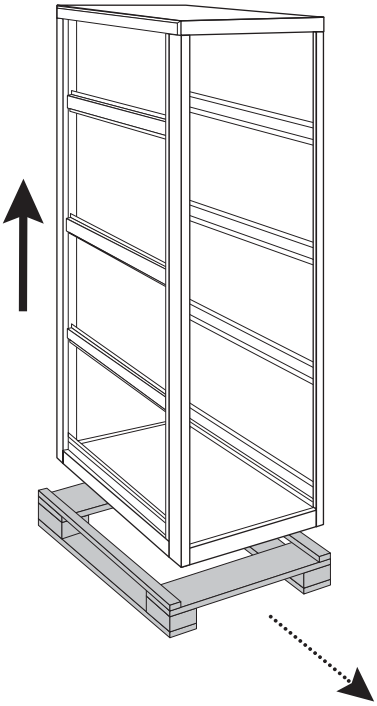

Figure 5-14. Lift the rack off the pallet and move the rack to the work area.

4. If the rack is not going to be reshipped to another location, the metal pallet brackets, screws, and pallet can be discarded.

## Adjusting the Position of the Vertical Rack Rails

The Spinnaker rack is delivered with the vertical rack rails correctly positioned to accommodate the features of the SpinServer components.

The correct position of the vertical rack rails at the front of the rack is determined by the space needed to accommodate the handles on the front of the SpinServer components. The front vertical rack rails must be placed at least 1.25 inches back from the front of the rack so that the rack door can close without impacting the component handles.

The correct position of the vertical rack rails at the back of the rack is determined by the length of the bracket/slide assembly kits needed to accommodate the SpinServer components. The optimal location of the rear vertical rack rails is 29.5 inches from the front vertical rails. The rear vertical rack rails must be at least 28.5 inches from the front vertical rails and no more than 33.0 inches from the front vertical rails.

If you need to move the vertical rack rails, you can make minor adjustments by loosening the ten screws and sliding the rail approximately 0.5 inch in one direction or the other. After making the adjustment, retighten the screws.

For major adjustments of the vertical rack rail positions, follow these steps:

1. Remove the ten screws in one of the front vertical rack rails and place them in a safe location for use when reinstalling the vertical rack rail.

**Note:** Remove only one vertical rack rail at a time.

2. Remove the vertical rail from the rack.

3. Remove the ten clip nuts that hold the screws for each of the vertical rack rails. Determine the new vertical rack rail position and place the clip nuts in the correct positions for rail placement.

4. With the assistance of another person, place the vertical rail in the rack to correctly line up with the clip nuts and replace the ten screws to firmly hold the vertical rail in position.

5. Repeat Steps 1 through 4 for the other front vertical rack rail and then for the two rear vertical rack rails.

## Marking the Positions of SpinServer Components

Refer to the rack layout design. Use the SpinServer chassis rack template to mark with a colored marker or tape the positions of the server chassis on the vertical rack rails. Mark the positions of the SpinStor 200 enclosures as well.

## 5.4 Replacing Rack Side Panels

To replace the side panels, follow these steps:

1. Working with another person, align the side panels with the rack frame.
2. Set the bottom edge of the side panel on the rack frame and push the panel toward the rack to engage the holding clips.
3. Firmly press on the side panel near the lock to ensure that the side panel lock snaps into engagement.
4. Repeat Steps 1 through 3 for the other side panel.
5. Lock the side panels and place the side panel keys in a safe place.

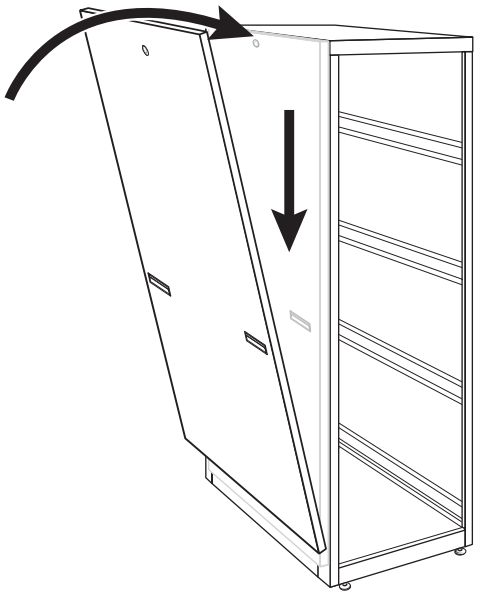

Figure 5-15. To replace the side panels on the Spinnaker racks, set the bottom of the panel onto the rack and push the top of the panel toward the rack.

## 5.5 Replacing Rack Doors

After the rack and equipment are in the permanent location and the rack has been leveled, retrieve the doors, one at a time, from the temporary storage. To replace the doors, follow these steps.

1. Lift the door up to position it over the three hinge pins and slide the door down onto the hinge pins.

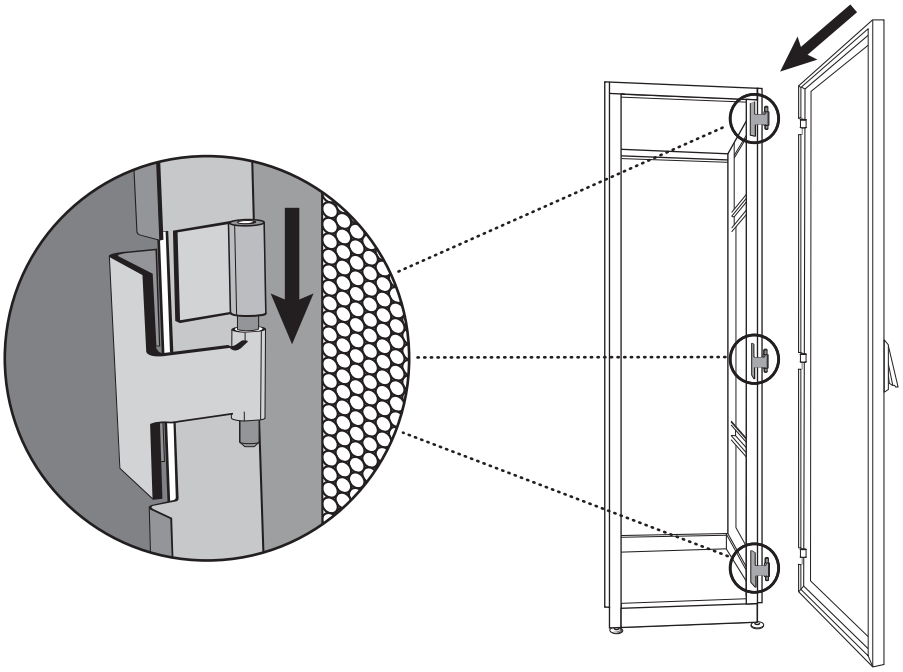

Figure 5-16. Position the door over the three hinge pins and pull down to seat the door on the hinges.

2. Carefully swing the door away from the rack to ensure that the door hangs straight and true.

**Note:** The rack doors can be replaced after you have installed all power cords and network cables. The instructions for cabling are included in the chapter “Setting Disk IDs and Installing Cables” on page 103.

## 5.6 Attaching Anti-Tip Plates

If the rack is freestanding and not placed in a row of racks, the anti-tip plates must be attached. The rack is shipped with four anti-tip plates.

To attach the anti-tip plates, use the hardware included in the rack shipment. For each anti-tip plate, use two sets of the washer and screw combinations to attach it to the rack as shown in the following figure.

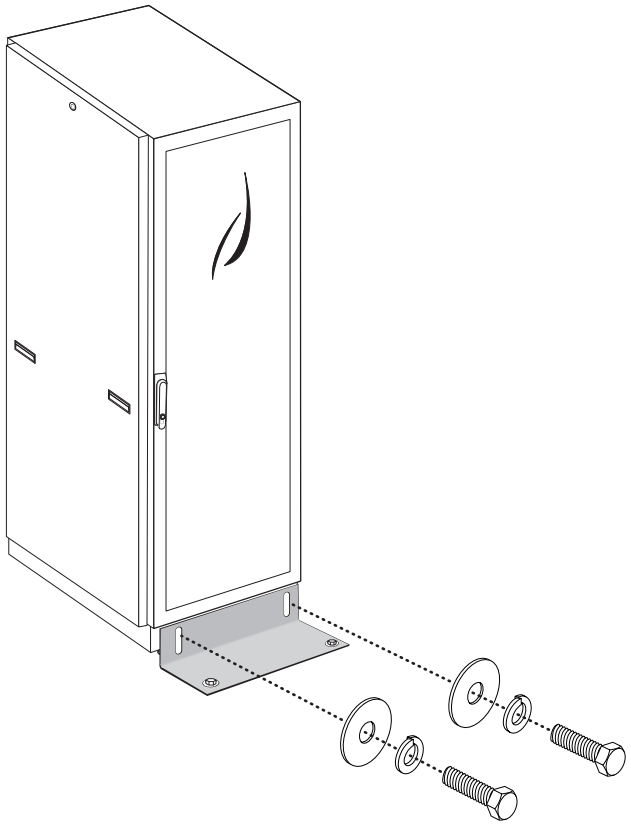

Figure 5-17. Proper anti-tip plate placement

## 5.7 Moving Rack to Permanent Location

After you have completed the replacement of the side panels and the attachment of the anti-tip plate onto the equipment rack, you are ready to move the rack to its permanent location.

1. With at least two people steadying the rack, slowly wheel the rack to its permanent location.

2. After the rack is in its permanent location, lower the levelers to the point that the casters are no longer touching the floor.

3. Ensure that the rack is level on all sides and make adjustments to the levelers if necessary.

# 6.0 Installing the UPS

This chapter provides product safety notices and guidelines for installing the 100-volt UPS, 120-volt UPS, the 208-volt UPS, or the 230-volt UPS into a Spinnaker rack or another square-hole rack or a threaded-hole rack. If you are not using a Spinnaker rack, review the instructions and safety warnings provided by your rack's manufacturer.

**Important:** The installation procedures in this chapter are provided only as reference for users of legacy SpinServer systems. New SpinServer systems are shipped preinstalled in equipment cabinets.

**Warning:** The 100-volt UPS chassis requires at least two people to lift and handle the chassis. When lifting the chassis, handle it in such a way that the weight is evenly distributed and stabilized. Follow national or regional safety standards when lifting or repositioning any SpinServer system components.

**Warning:** The 120-volt UPS chassis requires at least two people to lift and handle the chassis. When lifting the chassis, handle it in such a way that the weight is evenly distributed and stabilized. Follow national or regional safety standards when lifting or repositioning any SpinServer system components.

**Warning:** The 208-volt UPS chassis requires mechanical assistance to lift and handle the chassis. When lifting the chassis with mechanical assistance, handle it in such a way that the weight is evenly distributed and stabilized. Follow national or regional safety standards when lifting or repositioning any SpinServer system components.

**Warning:** The 230-volt UPS chassis requires at least two people to lift and handle the chassis. When lifting the chassis, handle it in such a way that the weight is evenly distributed and stabilized. Follow national or regional safety standards when lifting or repositioning any SpinServer system components.

# 6.1 Installing the UPS

Installing the UPS includes the following tasks:

1. Reviewing the rack layout design and locating the marks on the rack for positioning the UPS slides

2. Installing the UPS chassis in the rack

## Reviewing the Rack Layout Design

Before starting to install the UPS chassis, review the rack layout design and locate the marks on the vertical rack rails to correctly position the UPS chassis slides in the rack.

**Note:** The UPS slides are not equal in height to the chassis itself. The slide requires less than 2U of vertical space for the UPS in the equipment rack; however, your rack layout design must allow a full 2U of rack space for the UPS.

**Note:** Your rack layout design needs to reflect the fact that only the SpinServer is powered by the UPS.

## Installing the UPS in the Rack

To perform the installation of the UPS in the equipment rack, refer to the *APC Smart-UPS User's Manual*, which is included in the box with the UPS.

# 7.0 Installing the SpinServer

This chapter provides product safety notices, instructions, and guidelines for installing the SpinServer into a Spinnaker rack or another square-hole rack or a threaded-hole rack. If you are not using a Spinnaker rack, review the instructions and safety warnings provided by your rack's manufacturer.

**Important:** The installation procedures in this chapter are provided only as reference for users of legacy SpinServer systems. New SpinServer systems are shipped preinstalled in equipment cabinets.

**Warning**: CLASS 1 LASER PRODUCT

**Warning**: Lasers emit invisible radiation from the aperture opening when no fiber-optic cable is connected. When removing cables, do not stare into the open apertures. In addition, install protective aperture covers to fiber ports with no cable connected.

**Warning**: The SpinServer chassis requires at least two people to lift and handle the chassis. When lifting the chassis, handle it in such a way that the weight is evenly distributed and stabilized. Follow national or regional safety standards when lifting or repositioning any SpinServer system components.

**Warning**: While working on the system, do not wear loose clothing that can accidentally become entangled with one of the fans or touch an electrical circuit.

**Warning**: To prevent injury when performing maintenance on a powered-down SpinServer, disconnect the power cords from all AC inlets before opening the cover of a server chassis.

**Warning:** During normal operations, the internal components of the SpinServer and SpinStor 200 become hot. During service operations, avoid touching hot surfaces.

**Warning:** To prevent personal injury, always allow the fans to spin down before removing the fan assembly.

**Important:** On the server chassis, the removable power supplies have handles to help facilitate their removal. Never use these handles to lift or carry the chassis.

**Important:** When attaching cables to the SpinServer, you must provide a service loop of 3 feet (1 meter) to allow the SpinServer to be extended the full length of the installation slides for servicing components on the interior of the chassis.

The SpinServer installation kit is described in the following table.

**Table 7-1. SpinServer Installation Kit**

| Description | Number of Parts |
|---|---|
| Fastenerless SpinServer installation kit for Spinnaker racks and other square-hole racks | 2 |
| Universal installation kit for other racks (threaded-hole racks) | 2 |

**Note:** The installation procedures for the SpinServer differ from those of the SpinStor 200 disk enclosures and the UPS.

## 7.1 Installing the SpinServer in the Rack

If you have ordered a Spinnaker rack or if you are supplying your own rack, the slide assemblies are included with the SpinServer. Installing the SpinServer includes the following tasks:

1. Reviewing your rack layout design
2. Checking the parts in the SpinServer installation kits
3. Installing the SpinServer in a square hole rack by using the fastenerless slide or in a threaded-hole rack by using the universal slides

## Reviewing the Rack Layout Design

Before starting the chassis installation process, review your rack layout design. Use the rack-mounting template for the SpinServer to mark the locations on the vertical rack rails to position the slide assemblies in the rack.

**Note:** The SpinServer slides are not equal in height to the SpinServer itself. The slide requires less than 2U of vertical space in the equipment rack; however, the rack layout design must allow a full 4U of rack space for the SpinServer, as indicated by the template.

## SpinServer Installation Kit

The SpinServer installation kit includes the following parts. Ensure that all of the necessary parts are present before proceeding with the installation.

- Fastenerless slide assembly
- Universal slide assembly
- Mounting hardware kit

### Fastenerless Slide Assembly

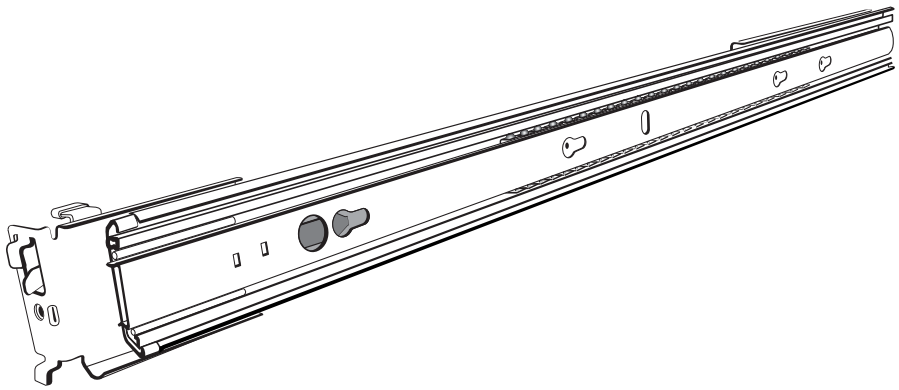

Figure 7-1. Fastenerless slide assembly

### Universal Slide Assembly

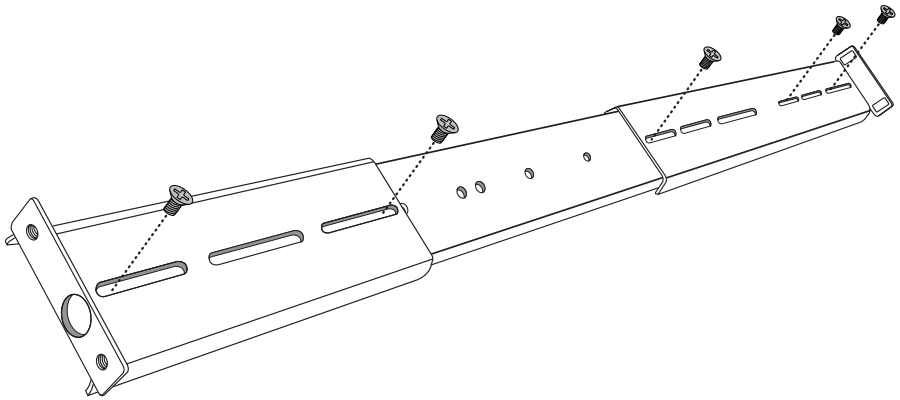

Figure 7-2. Universal slide assembly

### Mounting Kit

The SpinServer mounting hardware kit includes the following parts. Ensure that all of the necessary parts are in the kit before proceeding with the installation.

**Table 7-2. SpinServer Mounting Hardware Kit**

| Mounting Hardware Kit Parts | | |
|---|---|---|
| **Description** | **Number of Parts** | **Illustration** |
| #10-32 Truss head screw | 7<br>(4 required for fastenerless slides)<br>(6 required for universal slides) | 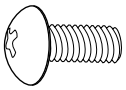 |
| M5-0.8X12 Pan head screw<br>(Universal slides only) | 5<br>(4 required) | 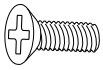 |
| M4-0.7X6 Flat head screw<br>(Universal slides only) | 12<br>(10 required) | |
| M4-0.7X8 Pan head screw<br>(Universal slides only) | 12<br>(10 required) | |
| #10 Flat washer<br>(Universal slides only) | 5<br>(4 required) | |
| M6 Cage nut | 3<br>(2 required) | 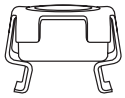 |

## SpinServer Installation in a Square-Hole Rack by Using Fastenerless Slide

Follow these steps for mounting the fastenerless slide assemblies at the correct position in a Spinnaker rack or other square-hole rack.

1. Locate the marks you made on the equipment rack rails for the SpinServer. With the blue safety latches facing up and the inner section of the slide to be pulled out facing toward the front of the rack, insert the hooking tabs into the appropriate holes at the front of the rack and press down to lock the slide assembly in place.

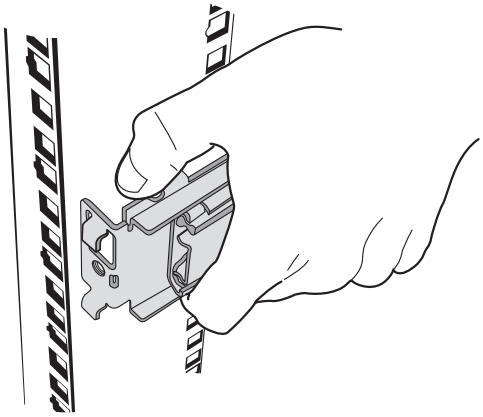

Figure 7-3. Insert the hooking tabs into the rack holes.

2. Insert the hooking tabs at the back of the rack and press down into place.

3. Push the blue safety latch forward to ensure that the lines align on each slide assembly.

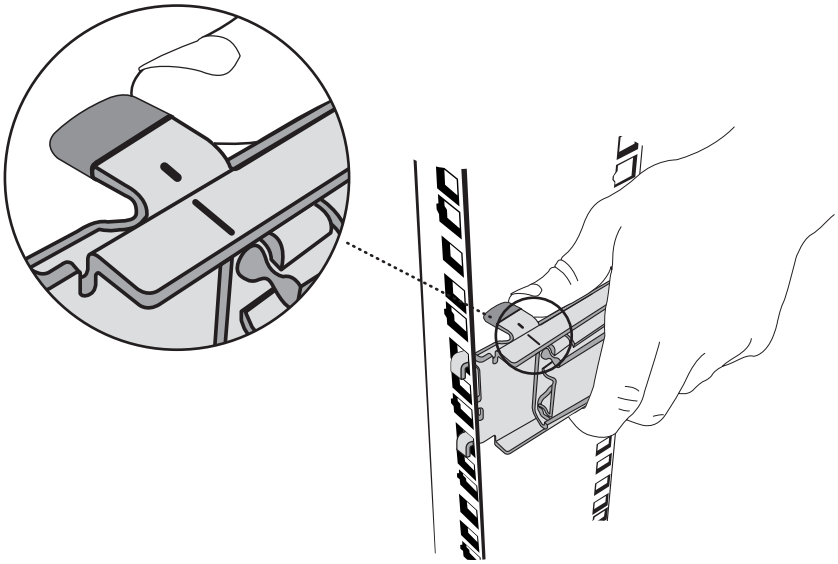

Figure 7-4. Align the lines on the blue safety latch and the slide assembly.

4. As shown in the following figure, install the M6 cage nuts in the location you have marked with tape or colored marker.

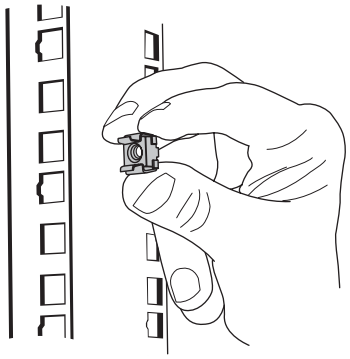

Figure 7-5. Cage nut installation

5. To secure the slide assemblies to the vertical rack rails, use the #10-32 truss head screws at the front and back of the rack.

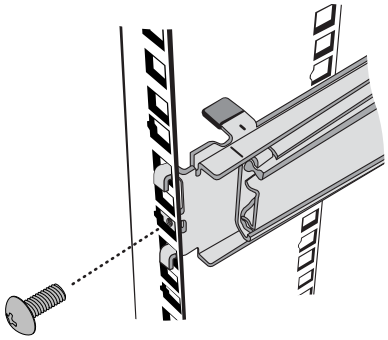

Figure 7-6. Secure the slide assembly to the rack with the #10-32 truss head screws.

6. Pull out the inner sliding sections of the mounted slides to the full extension positions, as shown in the following figure, until you hear a click as the slides are locked in place.

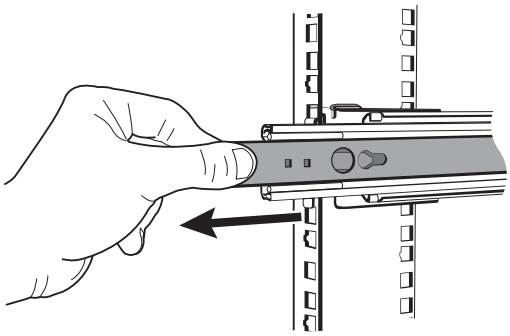

Figure 7-7. The extended inner slide

7. Depress the white tabs and completely remove the inner section from the slide assemblies.

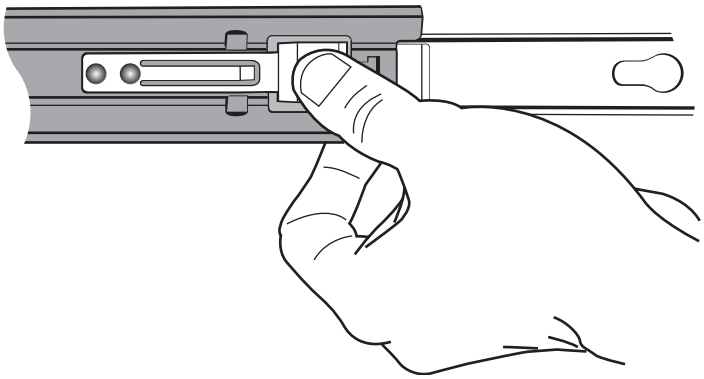

Figure 7-8. Depress the white tab.

8. Place the inner slide section over the shoulder screws on the SpinServer and push it toward the front of the SpinServer to lock in place.

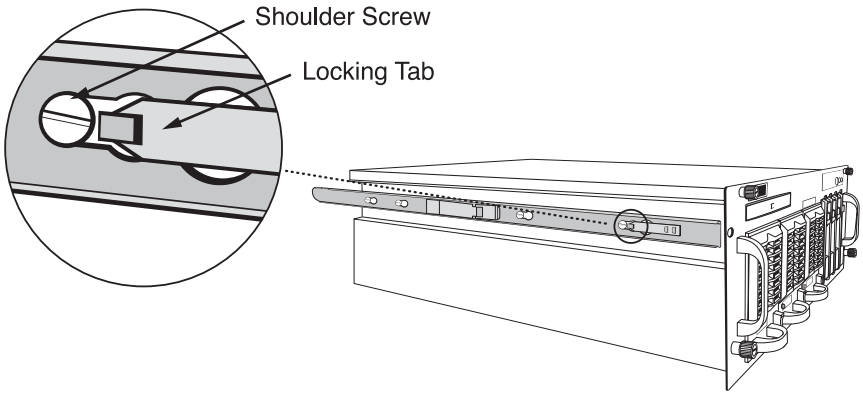


Figure 7-9. The inner slide is locked in place on the SpinServer with the locking tab.

9. With two people lifting the SpinServer, guide the inner slide into the slide assembly mounted in the rack until it stops.

**Note:** The first time the SpinServer is pushed in, it requires some additional pressure to seat the ball bearings.

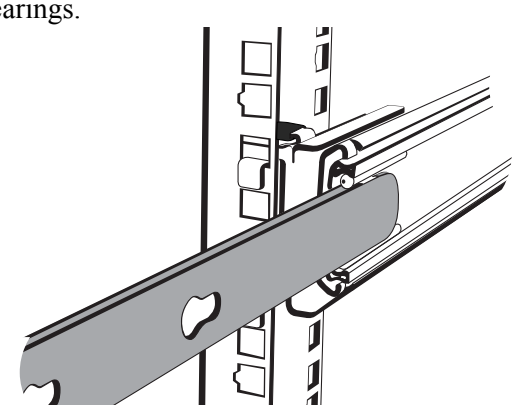

Figure 7-10. The inner slide is inserted into the slide assembly in the rack.

10. Depress the white tabs and with even pressure on both front corners of the SpinServer, push the SpinServer the remainder of the way into the rack.

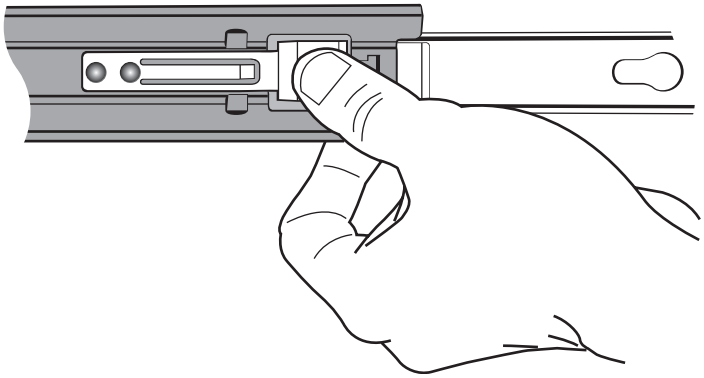

Figure 7-11. Depress the white tab.

11. Secure the SpinServer in the rack by tightening the rack lock thumbscrews.

## SpinServer Installation in a Threaded-Hole Rack by Using Universal Slides

If you are installing the SpinServer system in a threaded-hole rack, you must use the universal slide installation kit.

**Note:** The supplied hardware supports only #10-32 threaded racks.

The universal slide installation kit for the SpinServer consists of three parts:

- **Front Bracket:** The front bracket is attached to the front vertical rail of the rack.
- **Rear Bracket:** The rear bracket is twice the length of the front bracket and is attached to the vertical rail at the back of the rack.
- **Slide Assembly:** The slide assembly is a three-piece, ball-bearing assembly.

The slide assembly is attached to the brackets before the universal slide assembly is installed as a unit into the rack. The front and rear brackets are left and right specific. The brackets are marked left and right as seen from the front of the rack.

Locate the marks you made on the equipment rack rails for the SpinServer.

### Attaching the Front and Rear Brackets to the Slide Assembly

To attach the front and rear brackets to the slide assembly, follow these steps:

1. Attach the front and rear brackets to the slide assembly by using M4-0.76 screws.

**Note:** Ensure that the flange of the front bracket is flush with the front edge of the slide assembly. Adjust the position of the rear bracket so that the slide is long enough to reach the outside of the rear vertical rack rail.

**Note:** Position the rubber bumper on the slide at the back of the rack.

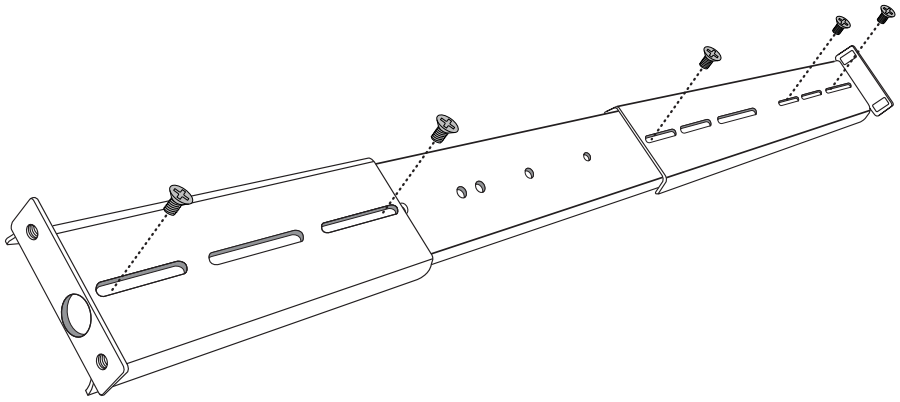

Figure 7-12. Universal slide assembly

2. Attach the front bracket to the vertical rack rail with the two M5 flat head screws.

**Note:** The front rack flange holes are sized for #10-32 screws. To accommodate the M5 flat head screws, drill out the #10-32 rack flange holes on the rack with a number 7 drill bit.

**Important:** Before drilling out the rack flange holes, ensure that the holes on the rack have been correctly marked by using the SpinServer template.

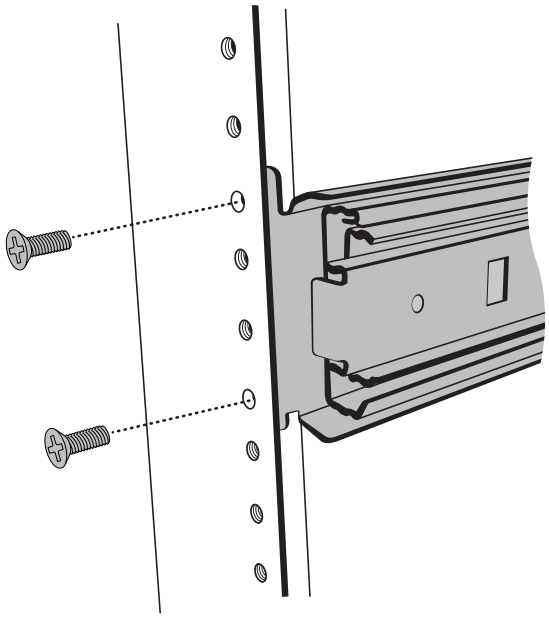

Figure 7-13. Fasten the slides to the front of the rack.

3. Attach the rear bracket outside the vertical rack rail by using two #10-32 truss head screws and two #10 washers.

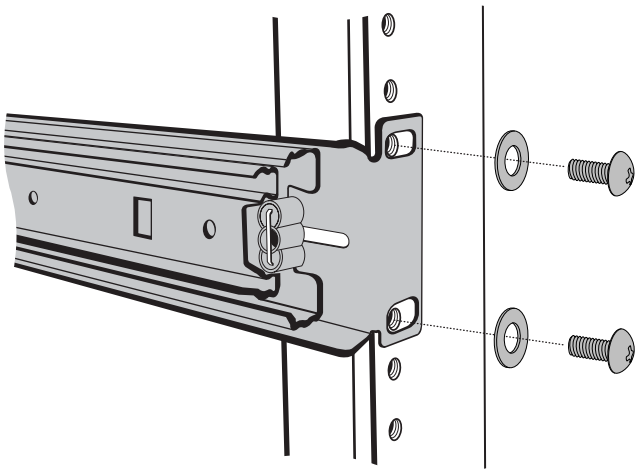

Figure 7-14. Fasten the slides to the back of the rack with the washers and the screws.

4. Pull the inner sliding rail out until it cannot be moved any further.

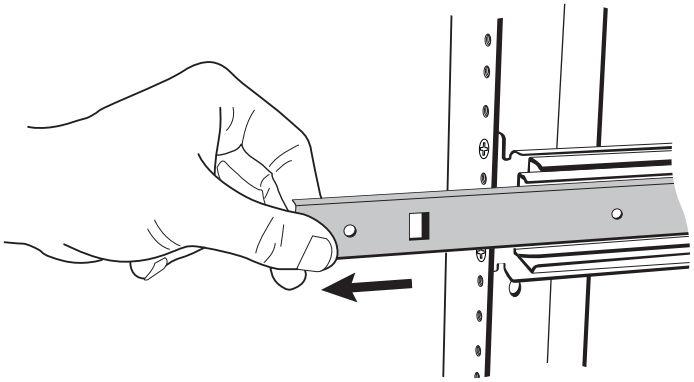

Figure 7-15. Pull the inner slide out to the fully extended position.

5. Use the inner locking tab to free the inner sliding rail from the slide assembly and pull the inner sliding rail completely out of the slide assembly. The remaining extended portion of the slide assembly must be pushed back into place.

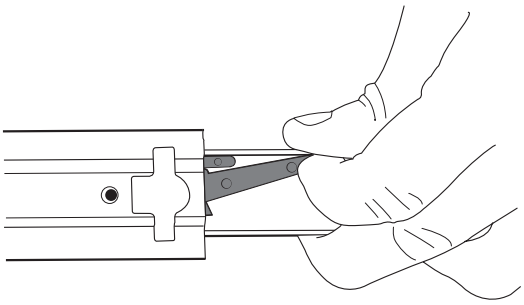

Figure 7-16. Use the inner locking tab to free the inner sliding rail.

6. Attach the inner slide section to the SpinServer by using the M4-0.7X8 pan head screws, as shown in the following figure.

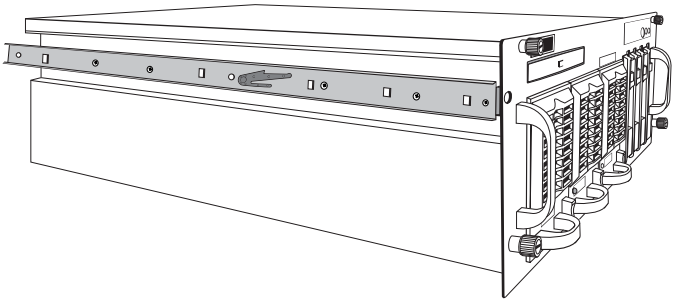

Figure 7-17. The inner slide is attached by using pan head screws.

7. With two people lifting the SpinServer, guide the inner slide into the slide assembly mounted in the rack and push the SpinServer into the proper position.

**Note:** The first time the SpinServer is pushed in, it requires some additional pressure to seat the ball bearings.

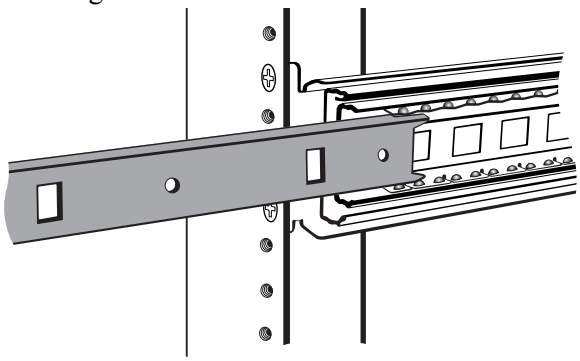

Figure 7-18. The inner slide is inserted into the slide assembly in the rack.

8. Secure the SpinServer in the rack by tightening the rack lock thumbscrews to the front vertical rack rails.

# 8.0 Installing the SpinStor 200

This chapter provides product safety notices and guidelines for installing the SpinStor 200 into a Spinnaker rack or another square-hole rack or a threaded-hole rack. If you are not using a Spinnaker rack, review the instructions and safety warnings provided by your rack's manufacturer.

**Important:** SpinStor 200 storage systems are used only with legacy SpinServer systems. New SpinServer systems use FAS270c (RAID) and DS14mk2 (JBOD) storage. For information on FAS270c and DS14mk2 storage, see the *FAS270/270c Hardware and Service Guide* and *Fibre Channel DiskShelf14 Hardware Guide*, respectively.

**Important:** The installation procedures in this chapter are provided only as reference for users of legacy SpinServer systems. New SpinServer systems are shipped preinstalled in equipment cabinets.

**Warning**: CLASS 1 LASER PRODUCT

**Warning**: Lasers emit invisible radiation from the aperture opening when no fiber-optic cable is connected. When removing cables, do not stare into the open apertures. In addition, install protective aperture covers to fiber ports with no cable connected.

**Warning:** The RAID and JBOD disk enclosures, without the disk carriers, require at least two people to lift and handle the chassis. When lifting the chassis, handle it in such a way that the weight is evenly distributed and stabilized. Follow national or regional safety standards when lifting or repositioning any SpinServer system components.

**Warning:** The power supply units for SpinStor 200 products have detachable power cords. Disconnect the power cord at the power supply unit before removing the power supply unit from the enclosure. When installing a power supply unit, insert the power supply unit into the enclosure before connecting the power cord.

**Warning:** Do not remove covers from the power supply unit. There is danger of electric shock inside. Return the PSU to your supplier for repair.

**Warning:** During normal operations, the internal components of the SpinServer and SpinStor 200 become hot. During service operations, avoid touching hot surfaces.

**Warning:** Do not lift the SpinStor 200 enclosure by means of the extended I/O module.

**Warning:** Do not lift the SpinStor 200 enclosure by the handles on the power supply unit/cooling module; they are not designed to support the weight of the populated enclosure.

**Warning:** The battery in the RAID I/O module is not user replaceable. There is a danger of explosion if the battery is incorrectly replaced. The battery must be replaced only by trained service personnel.

**Warning:** Operation of the disk enclosure with *any* modules missing disrupts the airflow and prevents the drives from receiving sufficient cooling. It is *essential* that all apertures are filled before the unit is operated. Dummy drive carriers are available to fill empty apertures.

**Warning:** The power connections must always be disconnected prior to removal of a power supply unit/cooling module from the enclosure.

**Warning:** If the SpinStor 200 system is powered up and you remove any module, replace the module immediately. If the system is used with modules or module blanks missing for more than a few minutes, the enclosure can overheat, causing power failure and data loss. Such use invalidates the warranty.

**Caution:** If this equipment is used in a manner not specified by the manufacturer, the protection provided by the equipment might be impaired.

**Caution:** Handle the power supply unit carefully and avoid damaging the connector pins. Do not install the unit if any pins appear to be bent.

**Caution:** Ensure that the front, back, and sides of the disk enclosure are not blocked after installation of the enclosure into a cabinet or closed environment. Blocking the front, back, or sides of the enclosure can cause reduced airflow that compromises effective heat removal.

**Caution:** It is recommended that you fit and check a suitable antistatic wrist or ankle strap and observe all conventional ESD precautions when handling SpinStor 200 plug-in modules and components. Avoid contact with backplane components, module connectors, etc.

**Important:** If main power is lost for any reason, the enclosure restarts automatically when power is restored.

**Note:** The SpinStor 200 enclosure must be installed in the rack without the power supply units, I/O modules, or disk drives in the enclosure.

## 8.1 Installing the SpinStor 200 in the Rack

If you ordered a Spinnaker rack or if you are supplying your own rack, the shelf and extension bracket assemblies are included with your SpinStor 200 RAID or JBOD.

Installing a disk enclosure includes the following tasks:

1. Reviewing your rack layout design and locating the marks on the rack for positioning the slides
2. Installing the SpinStor 200 enclosure in the rack
3. Installing the power supply units in the enclosure
4. Installing the I/O modules in the enclosure
5. Installing the drive carriers in the enclosure

### Reviewing the Rack Layout Design

Before starting the enclosure shelf assembly process, review your rack layout design. Mark the locations on the vertical rack rails to position the shelf assemblies in the rack.

**Caution:** When you install the disk enclosure into a cabinet or closed environment, the operating ambient temperature of the rack environment can be higher than the maximum recommended ambient temperature. You must provide for the proper circulation of air to avoid exceeding the maximum recommended ambient temperature.

## SpinStor 200 Installation Kit

The SpinStor 200 installation kit includes the following parts. Ensure that all of the necessary parts are present before proceeding with the installation.

**Table 8-1. SpinStor 200 Mounting Hardware Kit Parts**

| Description | Number of parts | Illustration |
|---|---|---|
| Front bracket | 2 | 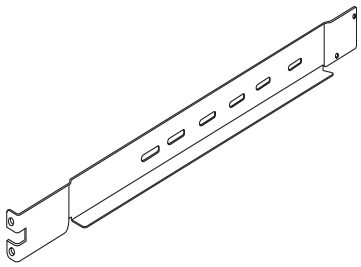 |
| Rear bracket | 2 | 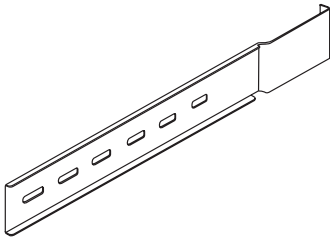 |
| Location pin | 4 | |
| Lock washer | 14 | |
| Washer | 12 | |

| Description | Number of parts | Illustration |
|---|---|---|
| M5X16 screw | 4 | |
| M5X8 screw/patchlock | 2 | |
| M5X10 screw | 10 | |
| M5 nut | 6 | |
| M5 cage nut | 4 | |
| Screw-hole cover | 4 | |

## SpinStor 200 Installation in the Rack

To install the SpinStor 200 enclosure in the equipment rack, perform the following steps:

1. Assemble the rack mounting rail kit and install it into the rack according to the following illustration. The drawings supplied with the kit also provide assembly instructions.

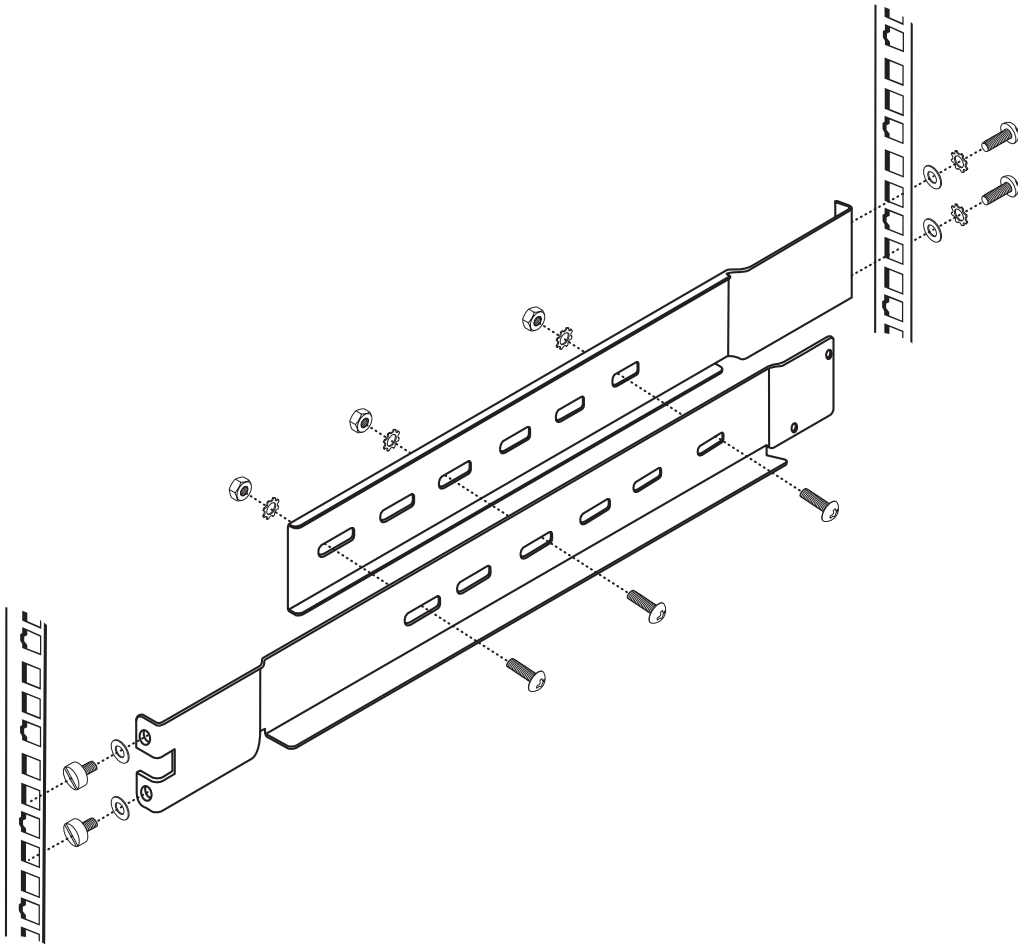

Figure 8-1. SpinStor 200 rack rail assembly

2. Slide the disk chassis onto the rack rails until the front flanges engage on the rack. Ensure that the disk chassis is centered on the rails.

3. Fit the rear brackets to the rear of the unit. Attach but do not tighten the four screws.

4. Screw the four front rack-mount screws through the flanges, as shown in the following illustration.

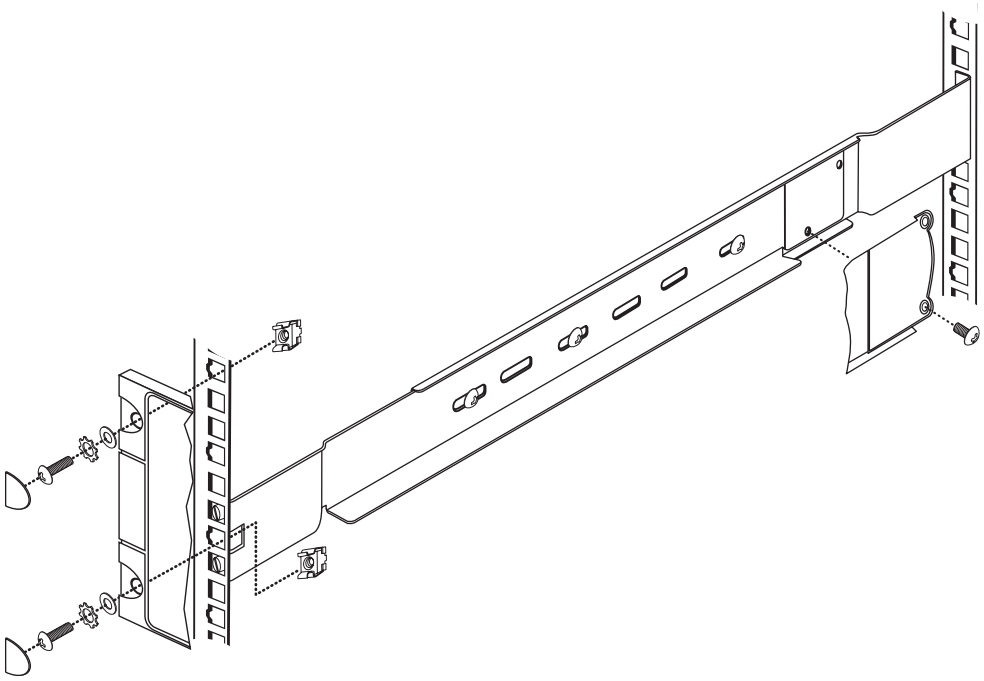

Figure 8-2. Screwing the SpinStor 200 enclosure into the rack

5. Tighten the four screws on the rear brackets, ensuing that the brackets fit tightly with the side and top of the disk enclosure.

6. Insert the screw-hole covers into the screw holes at each corner of the front of the enclosure.

## Power Supply Unit Installation

To install the power supply units/cooling modules in the enclosure, as shown in Figure 8-3, perform the following steps:

1. With the power supply unit's handle in the open position, slide the module into the enclosure.

2. Close the power supply unit's handle until the handle latches engage. A click can be heard when the latches engage.

3. Connect the power supply cord to the power supply unit.

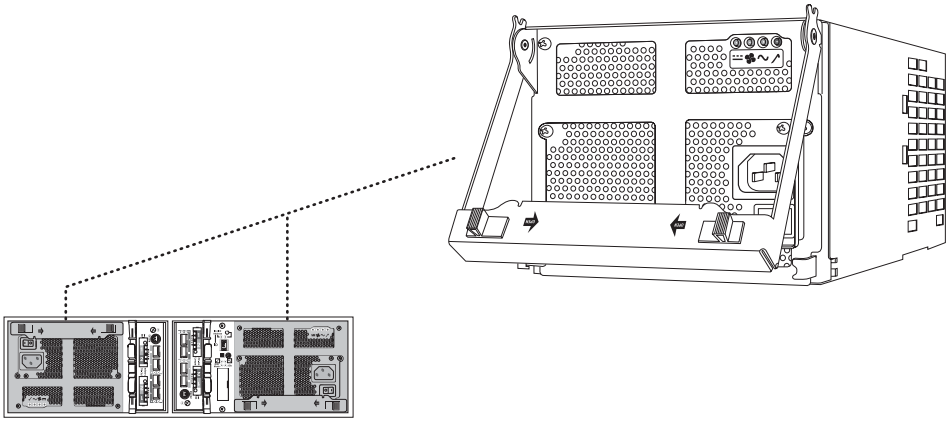

Figure 8-3. Power supply unit installed in the disk enclosure

## I/O Module Installation

To install the I/O modules in the enclosure, as shown in Figure 8-4, perform the following steps:

1. With the latches on the I/O module in the open position, slide the I/O module into the enclosure until the latch engages.

2. Close the latches. A click can be heard when the latches engage.

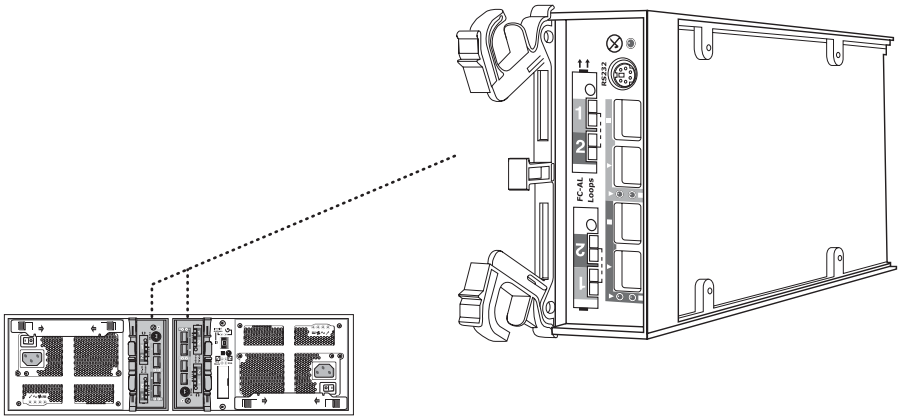

Figure 8-4. JBOD I/O module installed in the disk enclosure

## Drive Carrier Installation

To install the drive carriers in the enclosure, as shown in Figure 8-5, perform the following steps:

1. Open the carrier handle by pressing the handle latch to the right.

2. Slide the carrier into the enclosure until it is stopped by the lever on the right side of the carrier.

3. Push down on the carrier handle until the handle fully engages. A click can be heard when the handle engages.

4. If desired, engage the antitamper lock on the drive carrier by inserting the lock key into the cutout socket in the handle and rotating the key clockwise until a padlock symbol appears to the left of the lock. A lock key is provided with the enclosure.

   The drive carrier cannot be removed from the enclosure while the lock is engaged. To disengage the lock, insert the lock key into the handle and rotate the key counterclockwise until no symbol appears to the left of the lock.

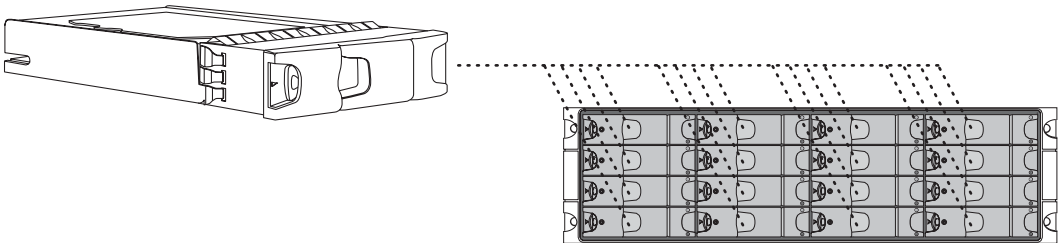

Figure 8-5. Drive carrier installed in the disk enclosure

## 8.2 Setting the DIP Switches on the SpinStor 200 Enclosure

You must set the DIP switches on the operator panel of the SpinStor 200 RAID and JBOD enclosures, as shown in Figure 8-6.

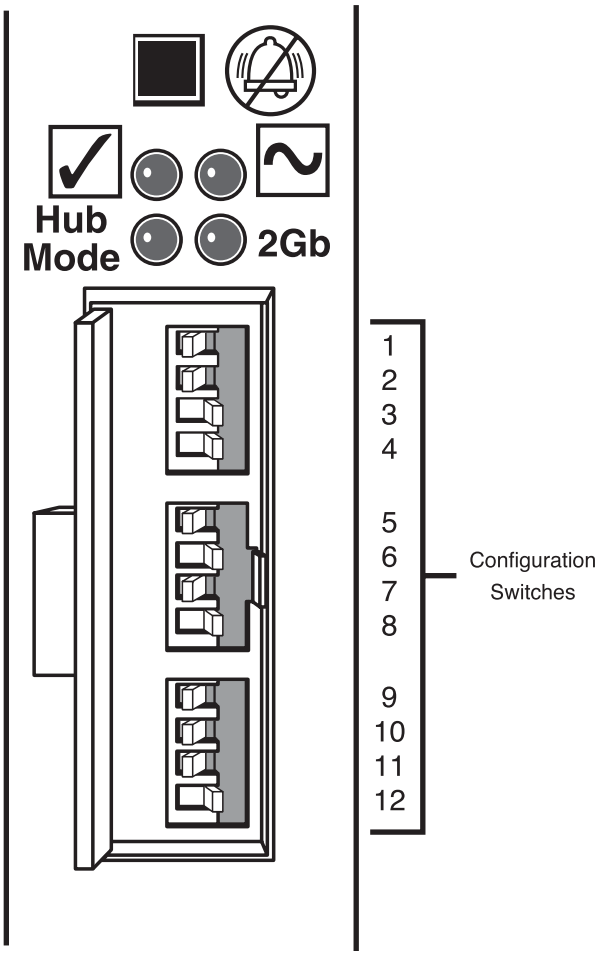


Figure 8-6. Configuration DIP switches on the operator panel

The settings depend on the type of enclosure and the speed of the Fibre Channel connection (1 Gb/s or 2 Gb/s). As you face the rear of the enclosure, a switch is on if it is in the left-hand position and off if it is in the right-hand position. Set the switches according to the following table:

**Table 8-2. DIP Switch Settings for the SpinStor 200 Enclosure**

| Switch number | Setting for JBOD array | Setting for RAID array with SpinServer 4100 | Setting for RAID array with SpinServer 3300 | Description |
|---|---|---|---|---|
| 1 | On | On | On | LRC in single-loop mode |
| 2 | On | On | On | Loop terminate mode |
| 3 | Off | Off | Off | RAID only; internal hub disabled |
| 4 | Off | Off | Off | Not used |
| 5/6 | On/Off<br>2 Gb/s | On/Off<br>2 Gb/s | Off/Off<br>1 Gb/s | RAID host hub speed: 2 Gb/s |
| 7/8 | On/Off | On/Off | On/Off | Drive loop speed: 2 Gb/s |
| 9/10 | On/On | On/On | On/On | Drive addressing: mode 0 |
| 11 | On | On | On | Enable selection functions by using hardware switches |
| 12 | Off | Off | Off | Not used |

**Note:** Switch settings are read only when the enclosure is first turned on.

# 9.0 Setting Disk IDs and Installing Cables

After you have completed installing the SpinStor 200 enclosures into the equipment rack, you are ready to connect the various cables and install the power strips. It is recommended that you set the disk drive IDs before installing the cables so that the cables do not interfere with reading and setting the switches.

The SpinServer system includes one or more SpinStor 200 RAID enclosures attached to the SpinServer. For increased data storage, you can add SpinStor 200 JBOD enclosures to the system by attaching them to the SpinStor 200 RAID.

**Important:** When attaching cables to the SpinServer, you must provide a service loop of 3 feet (1 meter) to enable the SpinServer to be extended the full length of the installation slides for servicing components on the interior of the enclosure.

**Important:** SpinStor 200 storage systems are used only with legacy SpinServer systems. New SpinServer systems use FAS270c (RAID) and DS14mk2 (JBOD) storage. For information on FAS270c and DS14mk2 storage, see the *FAS270/270c Hardware and Service Guide* and *Fibre Channel DiskShelf14 Hardware Guide*, respectively.

**Important:** The configuration procedures in this chapter are provided only as reference for users of legacy SpinServer systems. New SpinServer systems are shipped preconfigured in equipment cabinets.

## 9.1 SpinServer Ports and Connectors

The SpinServer ports and connectors are detailed in the following illustration.

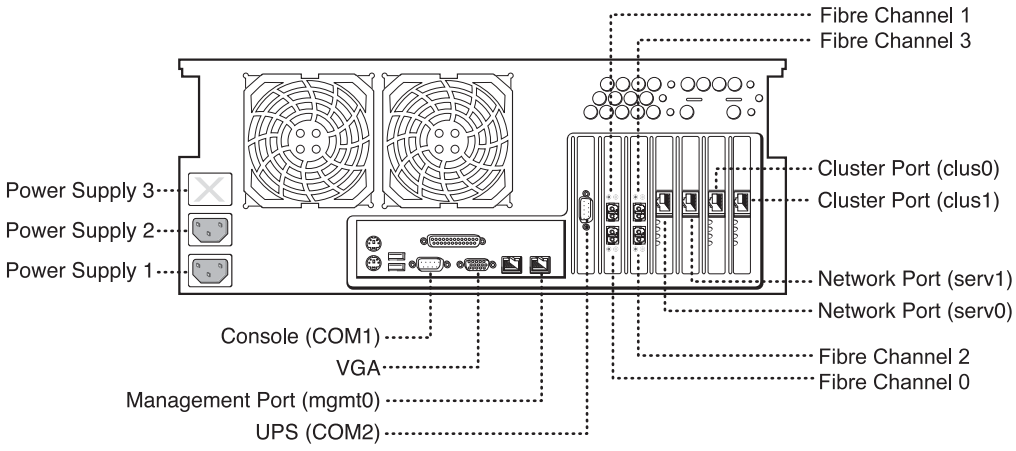


Figure 9-1. SpinServer ports and connectors

# 9.2 SpinStor 200 RAID LEDs and Connectors

The SpinStor 200 RAID enclosure's LEDs and connectors are detailed in the following illustration.

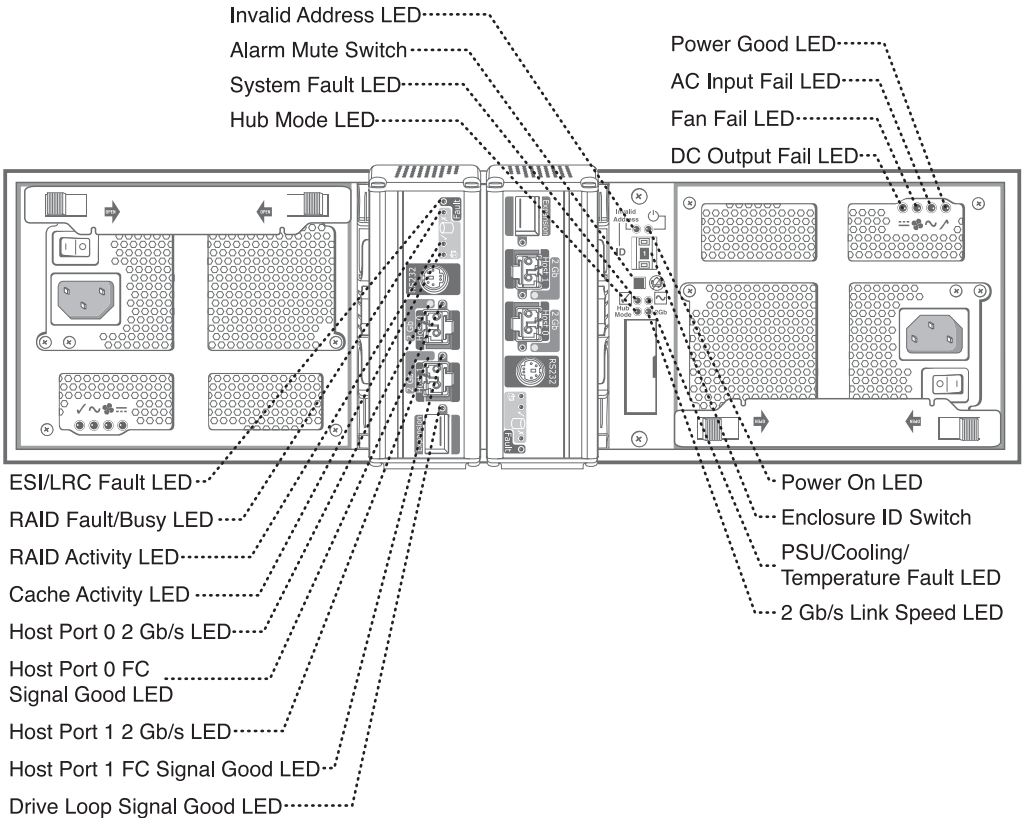


Figure 9-2. SpinStor 200 RAID LEDs and connectors

## 9.3 SpinStor 200 JBOD LEDs and Connectors

The SpinStor 200 JBOD enclosure's LEDs and connectors are detailed in the following illustration.

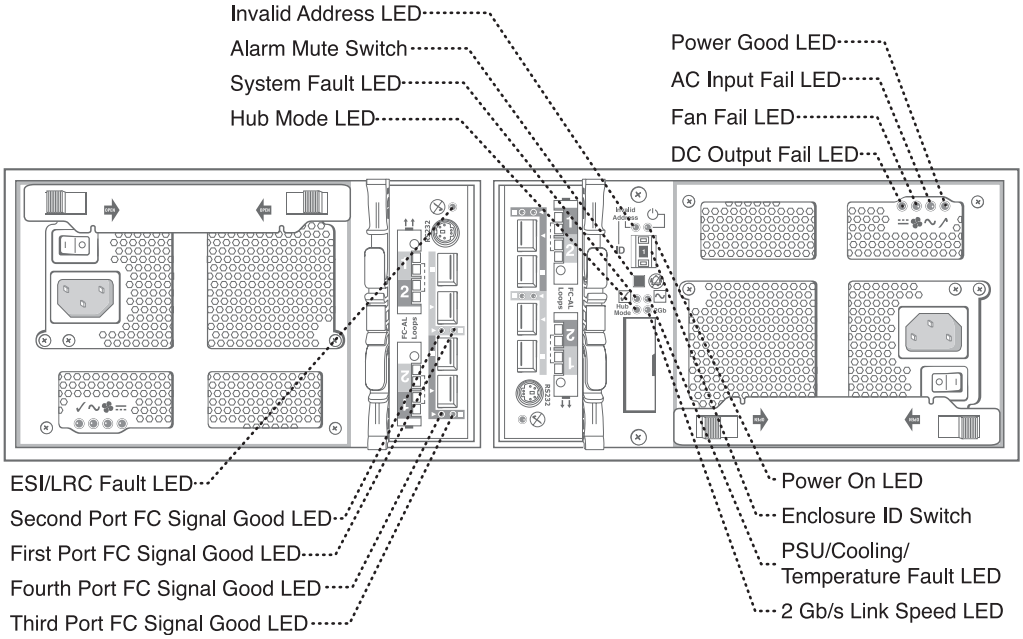


Figure 9-3. SpinStor 200 JBOD LEDs and connectors

## 9.4 Setting Disk IDs

All of the disks attached to a single RAID enclosure must have unique IDs. A disk's ID is determined by its physical location within the disk enclosure and the base ID setting of that enclosure.

**Note:** All disk drives must have unique IDs. Nonunique disk IDs within a system can cause loss of data.

### SpinStor 200 RAID

Ensure that the base ID setting of a SpinStor 200 RAID is set to 1. This is set by using the enclosure ID switch on the operator panel at the back of the enclosure.

### SpinStor 200 JBOD

The disk drive IDs in the SpinStor 200 JBOD must be set manually by setting the base ID of that enclosure. Use the enclosure ID switch on the operator panel at the back of the enclosure, as shown in the following figure.

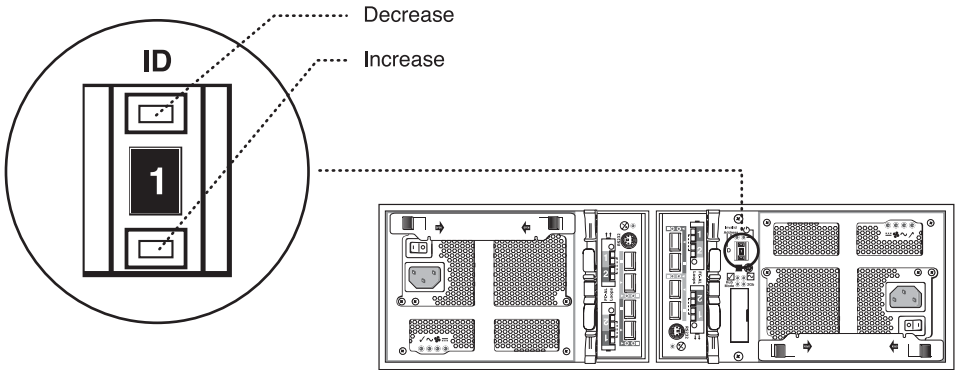


Figure 9-4. The enclosure ID switch on the SpinStor 200 JBOD

Up to six expansion enclosures can be attached to a single RAID enclosure. For the expansion JBOD enclosures attached to a particular RAID disk enclosure, set the switches as follows:

**Table 9-1. Settings for Enclosure ID Switches on the SpinStor 200 JBOD**

| Disk Enclosure | Enclosure ID Switch |
|---|---|
| RAID | 1 |
| Expansion 1 | 2 |
| Expansion 2 | 3 |
| Expansion 3 | 4 |
| Expansion 4 | 5 |
| Expansion 5 | 6 |
| Expansion 6 | 7 |

For more information on setting disk IDs, see “Disk ID Settings” on page 157.

## 9.5 Connecting the UPS Management Cable

Connect the SpinServer COM2 port to the APC UPS computer interface port. See the *APC Smart-UPS User’s Manual* to locate the proper connector on the UPS. Use the cable supplied with the UPS.

**Important:** Only the SpinServer is connected to the UPS. Do not connect any other equipment to the UPS.

**Caution:** You must connect the SpinServer COM2 port to the same UPS that is connected to the SpinServer power cord. Failure to make these connections can result in the loss of data.

**Caution:** Do not use a standard serial interface cable when connecting the SpinServer to the UPS because it is incompatible with the pin functions on the UPS connector. Using a standard serial interface cable prevents proper communication between the SpinServer and the UPS and can result in the loss of data. Be sure to use the cable that is provided with the UPS.

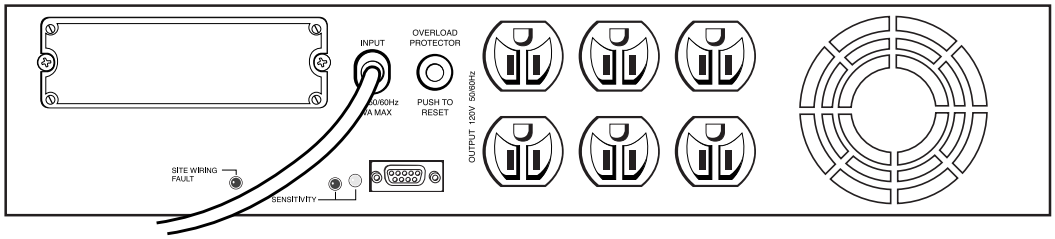


Figure 9-5. Rear view of the 120-volt UPS

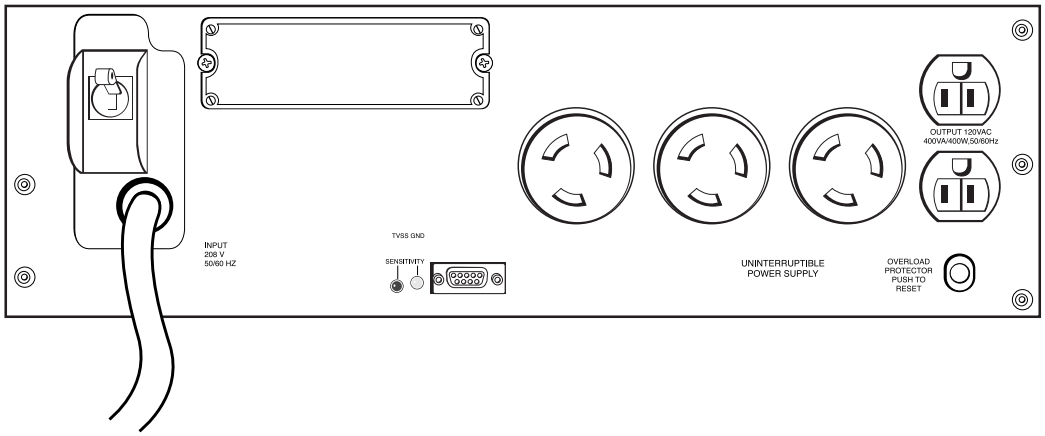


Figure 9-6. Rear view of the 208-volt UPS

# 9.6 Connecting Fibre Channel Cables

The most efficient way to share a single Fibre Channel connection among several disks or RAID controllers is to connect the devices in the form of a loop.

When one of the devices needs to send data to another device on the loop, it sends the data to its neighbor, which hands it off to its neighbor, and so on until the data reaches its destination. This process is extremely fast and efficient, enabling many disks to be connected to a single RAID controller or many RAID controllers to be connected to a single SpinServer port.

If the fiber-optic Fibre Channel cable between two RAID controllers is removed, the loop is broken and there is no longer a complete circuit from the SpinServer to the RAID controller and back again. This is a normal occurrence, however, and the Fibre Channel devices are designed to repair the loop in a fraction of a second.

At every Fibre Channel connection, an electronic bypass switch is present to complete the loop if signals are no longer being received due to a downstream failure.

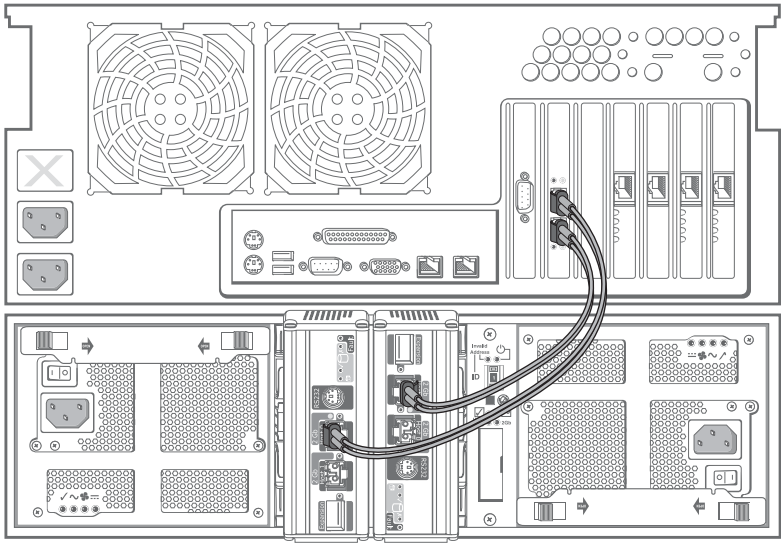

Figure 9-7. The Fibre Channel cable is attached to the SpinServer and to the RAID enclosure.

## Dual Loops

For redundant configurations, dual loops are used to connect to different hosts, dual host adapters, and other devices.

All of the daisy-chained RAID controllers connected to a pair of SpinServer ports are connected by using two Fibre Channel arbitrated loop (FC-AL) connections, one for each port of the pair. Similarly, all of the disks in a RAID system are connected with two Fibre Channel arbitrated loops, one connecting the upper I/O modules and one connecting the lower I/O modules.

Using dual loops improves the SpinServer performance by adding to the available data-carrying capacity of the system. Dual loops also improve reliability by enabling operations to continue if one loop has been damaged.

### Optical-Fiber Fibre Channel Cables

**Note:** For protection during shipment, the SpinServer has rubber plugs placed in the Fibre Channel ports. Remove these plugs before you connect the cables.

Optical-fiber Fibre Channel cables are provided with each RAID enclosure and are compatible with the SpinServer Fibre Channel ports and with the fiber-optic small form-factor pluggable (SFP) GBICs installed in the RAID enclosure.

Use these cables to attach a RAID enclosure either directly to the SpinServer or to another RAID enclosure, which itself is attached to the SpinServer, either directly or through another RAID enclosure.

Any number of RAID enclosures can be attached to a single SpinServer, but any given RAID enclosure can have only six JBOD enclosures attached to it.

### Copper Fibre Channel Cables

Copper Fibre Channel cables are provided with each expansion JBOD enclosure and are compatible with the copper GBICs installed in both the RAID enclosure ports and the expansion JBOD enclosure ports. Use these cables to attach an expansion JBOD enclosure either to a RAID enclosure or to another expansion JBOD enclosure, which itself is attached to a RAID enclosure either directly or through another expansion JBOD enclosure.

It is possible to attach as many as six expansion JBOD enclosures to a single RAID enclosure, allowing a single RAID set to include as many as 112 disks.

## 9.7 Connecting Ethernet Cables

Five Ethernet ports are available on SpinServer. For optimal performance, gigabit Ethernet ports are provided for networking and clustering. See Figure 9-1 for the location of these ports on the SpinServer chassis.

#### Management Interface

One of the Ethernet ports is the basic 10/100 megabit port, used for accessing the management interface software.

### Network Ports

Two of the ports are network ports and are used to provide network services (for example, NFS or CIFS) to the client. To connect the network Ethernet cables, follow this illustration.

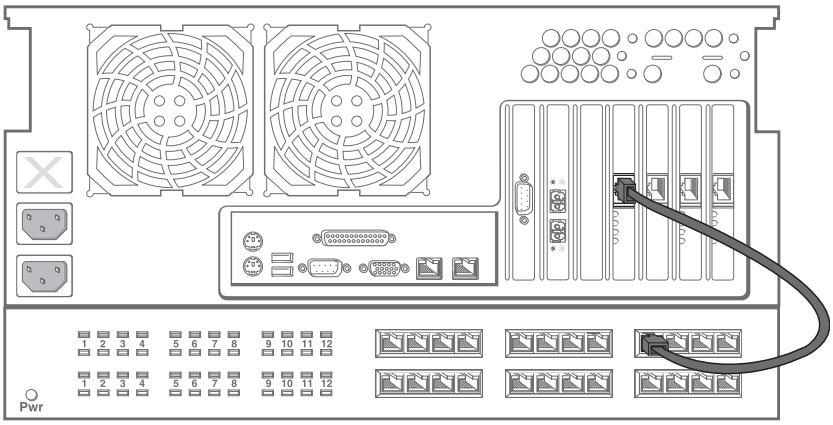


Figure 9-8. The Ethernet cable is attached to the enclosure and to the Ethernet switch.

### Cluster Ports

To assure that all system components will work together properly, the cluster ports must be configured even if only a single SpinServer is being installed. Even if you intend to use only one of the cluster ports, it is *strongly recommended* that you configure both cluster ports at initial installation of the software.

Two of the Ethernet ports are used as cluster ports to interconnect two or more SpinServers for reliability and performance. For performance and security, the cluster ports are connected through dedicated gigabit Ethernet switches.

Connect the Ethernet cables from multiple SpinServers in a clustering configuration as shown in the following illustration.

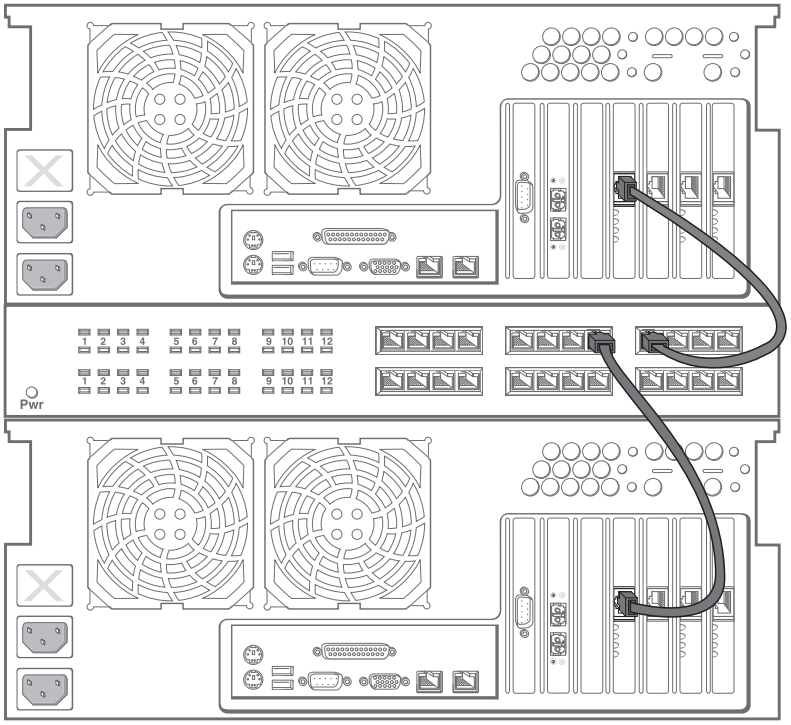


Figure 9-9. The Ethernet cable is attached to one SpinServer, to the Ethernet switch, and to the second SpinServer for clustering.

## 9.8 Connecting the SpinStor 200 RAID to the SpinStor 200 JBOD

Copper Fibre Channel cables are used to attach the disk ports on the SpinStor 200 RAID enclosure to disk ports on the SpinStor 200 JBOD.

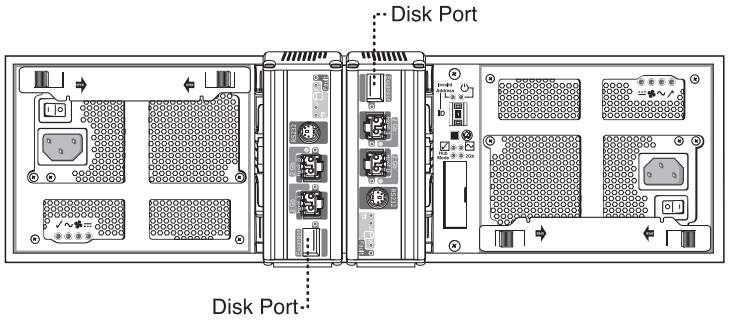


Figure 9-10. The SpinStor 200 RAID disk ports

The SpinStor 200 JBOD has two disk ports. Either one can be used with the copper Fibre Channel cable to connect to the SpinStor 200 RAID disk port.

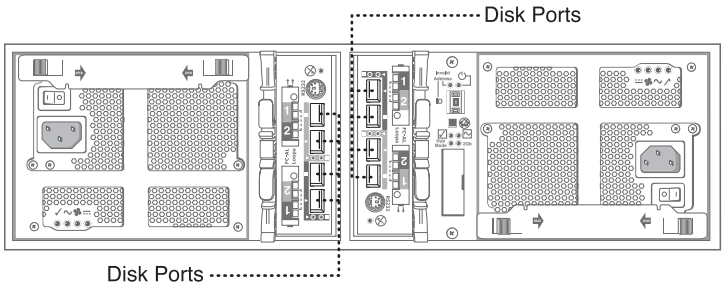


Figure 9-11. The SpinStor 200 JBOD disk ports

## 9.9 Connecting the Console

To access the command line interface (CLI) management software, connect a console with the null modem cable that is included with the SpinServer. Connect the console to the serial port (COM1).

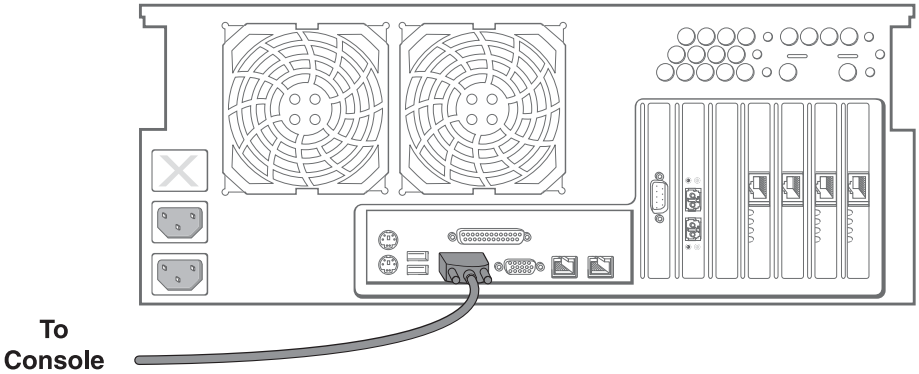


Figure 9-12. The serial cable is connected to the console.

**Note:** When using a direct connection through the serial port, you can access the management software only with the CLI.

# 9.10 SpinServer System Physical Connections

The following illustration demonstrates all of the physical connections for an example SpinServer system that uses SpinStor 200 storage.

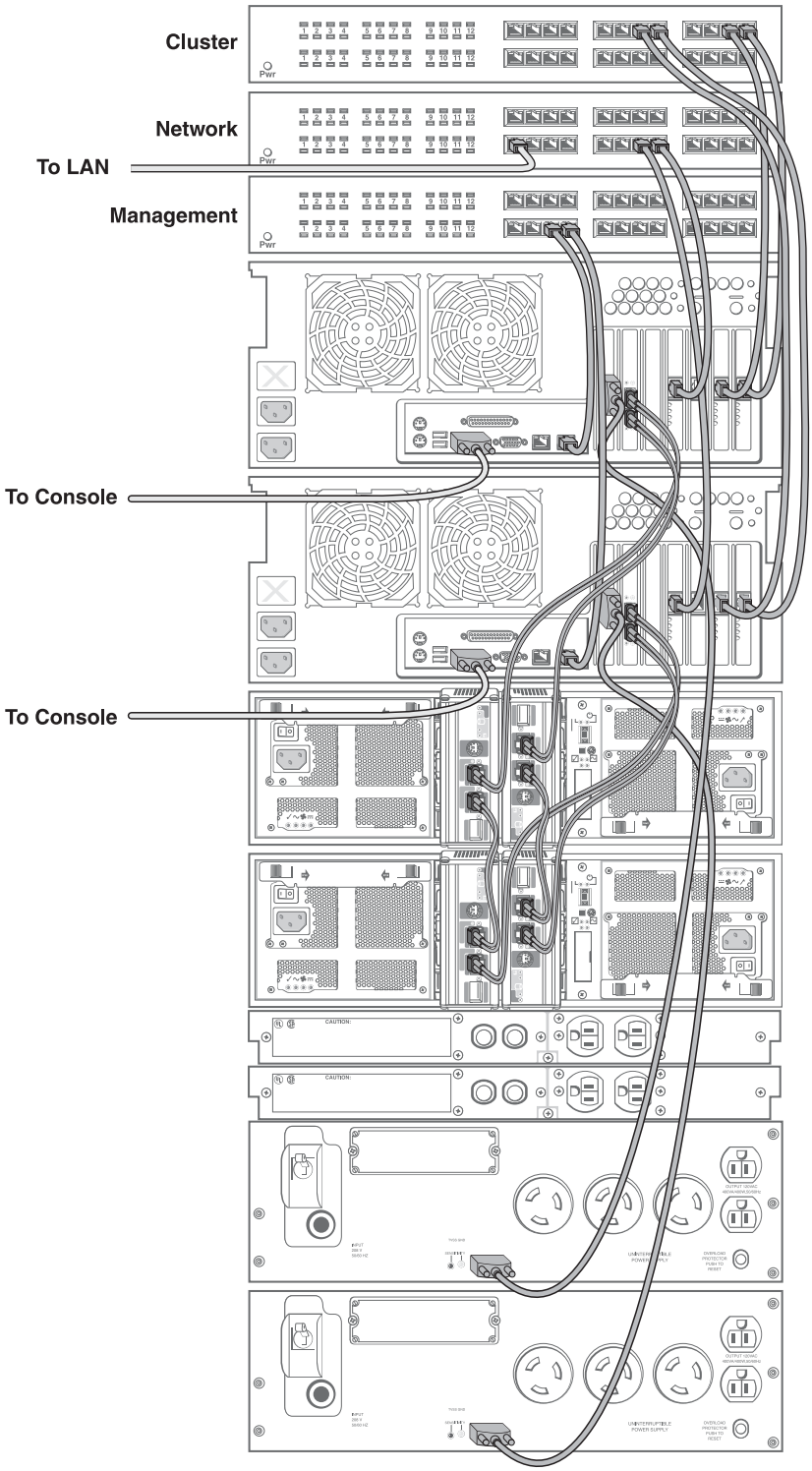


Figure 9-13. System cable connections for SpinServer components

# 10.0 Clustering and HA Connections

This chapter provides information and illustrations for designing the physical layouts and cabling for the following system examples:

- A SpinServer system that includes one SpinServer, a SpinStor 200 RAID, and a SpinStor 200 JBOD.
- A simple cluster system that is built by adding two SpinServers for clustering.
- High-availability (HA) systems that demonstrate the redundancy of connections that are added to systems to provide resiliency and to ensure that the system has no single point of failure.

For more detailed information about clustering and HA and the command sets used to configure and manage clustering and HA, see the *Administration Guide* and the *Administration Reference*.

The SpinServer system physical configurations that are illustrated in this chapter are basic setups. For other clustered and HA physical connection options, contact Network Appliance Technical Support.

**Important:** The configuration procedures in this chapter are provided only as reference for users of legacy SpinServer systems. New SpinServer systems are configured at the factory.

**Important:** The examples in this chapter use SpinStor 200 RAID and JBOD storage. New SpinServer systems use FAS270c (RAID) and DS14mk2 (JBOD) storage. The principles illustrated in these examples are the same regardless of the storage used with the SpinServer.

## 10.1 Single-Server System

The single-server system includes one SpinServer, one SpinStor 200 RAID, one SpinStor 200 JBOD, and a UPS.

These components are installed in the equipment rack with the SpinServer at midlevel in the rack, the UPS at the bottom of the rack, and the SpinStor 200 enclosures above or below the SpinServer.

**Note:** Even though this basic SpinServer system setup does not use clustering capability, each SpinServer must be entered into a cluster. In this configuration, use the **`spinservers createcluster`** command before any other system management task is undertaken. In this case, the cluster is a one-node cluster, consisting of a single SpinServer. For additional information, see the *Administration Guide*.

### Connections for the Single-Server System

The physical connections for the components in the single-server system are described in "Setting Disk IDs and Installing Cables" on page 103.

## 10.2 Clustered System

The clustered system setup used in this example includes two SpinServers, each with a SpinStor 200 RAID and SpinStor 200 JBOD connected to it. The clustered system includes a UPS for each SpinServer.

Clustering enables multiple SpinServers to be connected via a private cluster LAN or over a public WAN. Together these multiple systems act as a large virtual server or several large virtual servers. Any client connecting to any SpinServer network port in the cluster views the same set of exported files and file systems.

For security, the SpinServers in a cluster are typically connected through dedicated gigabit Ethernet switches. It is recommended that you connect the members of the cluster through a virtual private network (VPN) to ensure that cluster traffic remains secure.

**Important:** For virtual interface failover to work correctly, any Ethernet switches that are used for SpinServer clustering must permit gratuitous ARPs and must allow MAC addresses to be changed and then changed back to the original setting within a short period of time. See the *Administration Guide* for more information about virtual interface failover.

A clustered system provides the following advantages:

- The scalability of the SpinServer architecture is used to best advantage.
- Overall system capacity is enhanced with more storage and additional processing capacity.
- Data can be moved easily from one SpinServer to another.
- Data can be mirrored for HA.
- For configurations with two or more SpinServers, the client workload is shared among all SpinServers in the cluster.
- System management tasks for multiple SpinServers can be efficiently accomplished.

**Note:** The second SpinServer must be entered into the cluster by using the **`spinservers joincluster`** command. For additional information, see the *Administration Guide*.

### Connections for the Clustered System

The physical connections for the components in the clustered system are described in "Setting Disk IDs and Installing Cables" on page 103.

## 10.3 High Availability Systems

Using the SpinHA software ensures system resiliency in case a component fails. The HA system designs used as examples in this section include the following combinations of SpinServer components:

- Two SpinServers and one SpinStor 200 RAID enclosure
- Two SpinServers and two SpinStor 200 RAID enclosures
- Two SpinServers, two SpinStor 200 RAID enclosures, and two Fibre Channel switches
- Two SpinServers, four SpinStor 200 RAID enclosures, and two Fibre Channel switches

In an HA configuration, one of the SpinServers is designated as the primary SpinServer for a given storage pool. The other SpinServer is designated as the secondary SpinServer.

The data is left on the secondary SpinServer until the primary SpinServer writes it to the disks. If the primary SpinServer fails to write the data, the secondary SpinServer accomplishes the task. The secondary SpinServer automatically and transparently takes over for the failed SpinServer and continues system operations without losing any committed data.

With an HA system:

- All the advantages of the clustered system are included.
- The system adds resiliency and removes any single point of failure.

### Connections for the High Availability Systems

The physical connections for the components in the HA systems are the same as the physical connections for the clustered system, plus the HA connections that are described in the sections that follow.

### High Availability with Two SpinServers and One SpinStor 200 RAID

The most basic HA system is a two-SpinServer system with both SpinServers attached to one SpinStor 200 RAID disk enclosure, as shown in Figure 10-1. For the HA connections in this basic design, a port on each SpinServer is connected to a port on the SpinStor 200 RAID enclosure.

One SpinServer is designated as the primary server and the other is designated as the secondary server. The physical connections in this HA design ensure that each data update on the primary SpinServer is stored on the SpinStor 200 RAID and becomes available to the secondary SpinServer.

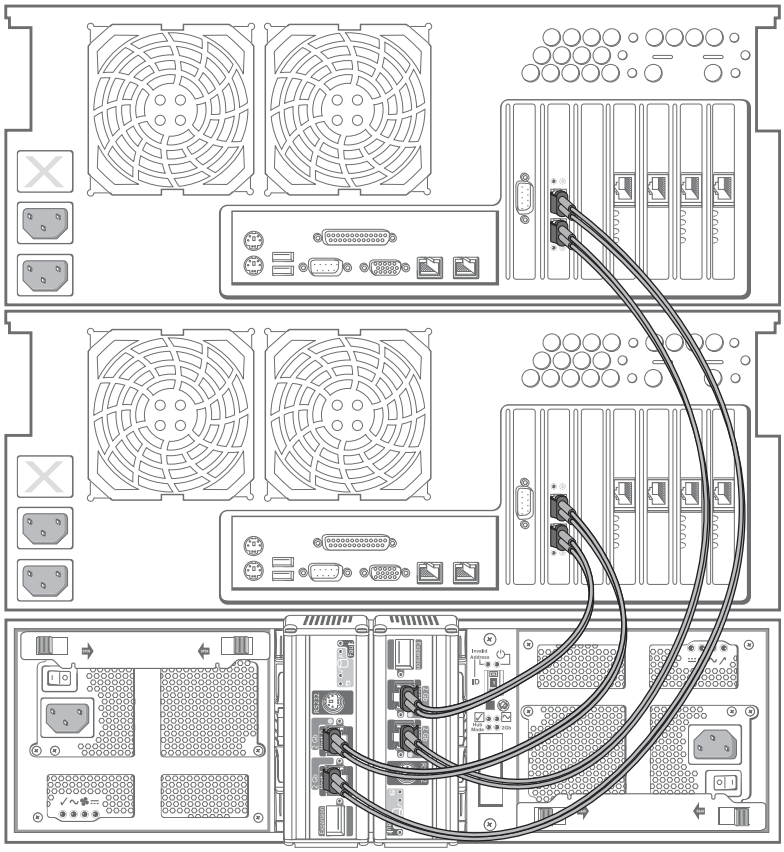

Figure 10-1. High availability with two SpinServers and one SpinStor 200 RAID disk enclosure

### High Availability with Two SpinServers and Two SpinStor 200 RAIDs

In this second HA configuration example, each SpinServer is attached to both SpinStor 200 RAID disk enclosures, as shown in Figure 10-2. In this configuration, both ports on both of the SpinStor 200 RAIDs are used.

The physical connections in this HA design ensure that each data update on the primary SpinServer is stored on the SpinStor 200 RAID and becomes available to the secondary SpinServer. Each SpinServer can be designated as the secondary server for the other.

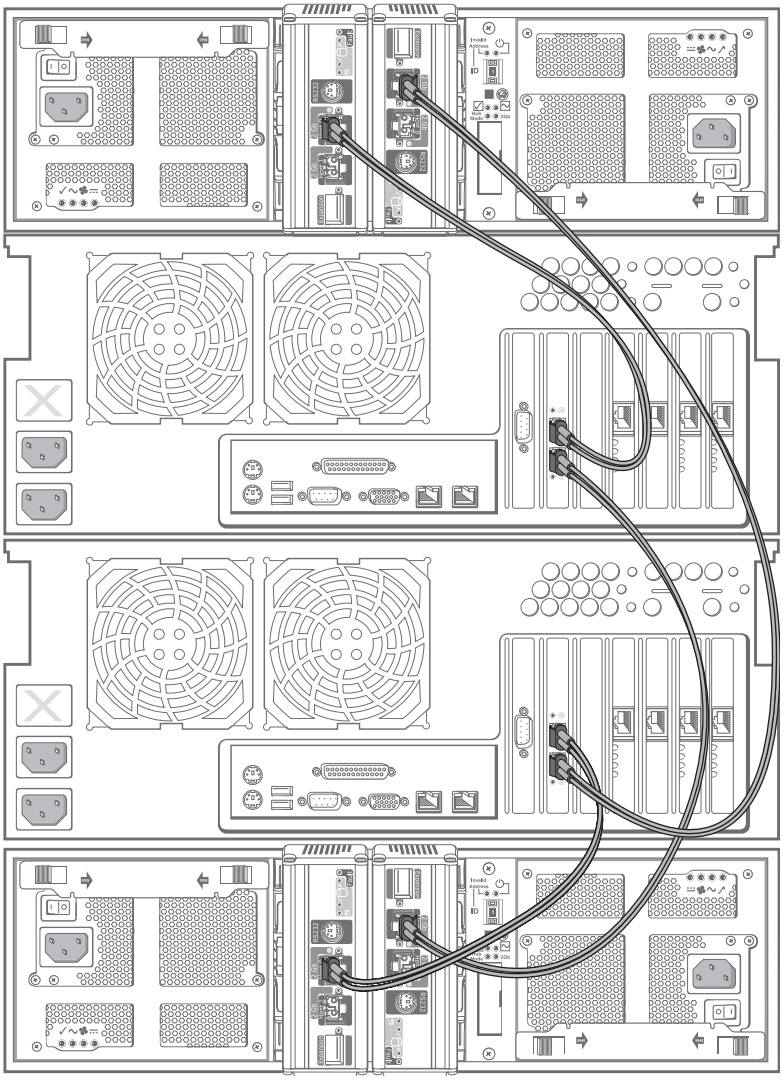

Figure 10-2. High availability with two SpinServers and two SpinStor 200 RAID disk enclosures

### High Availability with Two SpinServers, Two SpinStor 200 RAIDs, and Switches

In the third HA configuration example, the two SpinServers and the two SpinStor 200 RAIDs are connected to two Fibre Channel switches.

This configuration meets all resiliency requirements for HA. By using the two switches, this configuration can lose any one Fibre Channel connection and continue to maintain robust system connectivity.

In this example, each SpinServer is attached to both switches, and each SpinStor 200 RAID enclosure is also attached to both switches. In this configuration, two ports on each of the SpinStor 200 RAIDs are used, and the two ports on each of the SpinServers are used. The SpinStor 200 enclosure, RAID controller, disk, switch, and SpinServer provide redundancy. This configuration features easy and sufficient expandability because SpinServers and SpinStor 200 enclosures can be added as the system requires. The expandability is limited by the availability of Fibre Channel switch connections.

### High Availability with Two SpinServers, Four SpinStor 200 RAIDs, and Two Switches

In the fourth HA configuration example, the two SpinServers and the four SpinStor 200 RAIDs are connected to two zoned Fibre Channel switches.

This configuration meets all resiliency requirements for HA. By using the two zoned switches, this configuration can lose any one Fibre Channel connection and continue to maintain robust and redundant system connectivity.

There is opportunity for easy and sufficient expandability with this configuration because as many SpinServers and SpinStor 200 enclosures can be added as your system requires. The expandability is limited by the availability of Fibre Channel switch connections.

# 11.0 Power Connections

This chapter describes the installation and configuration of the power distribution system within a Spinnaker rack.

**Important:** The information in this chapter applies only to equipment racks provided with legacy SpinServer systems. New SpinServer systems use Network Appliance system cabinets; see the *42U System Cabinet Guide* for information. New SpinServer systems are preconfigured at the factory, so no advanced power configuration is required.

**Important:** This chapter describes the use of AC transfer switch (ATSs) with the UPSs. New SpinServer systems do not use ATSs; any information about ATSs is for legacy reference only.

**Important:** This chapter describes SpinStor 200 storage systems, which are used only with legacy SpinServer systems. New SpinServer systems use FAS270c (RAID) and DS14mk2 (JBOD) storage. For information on FAS270c and DS14mk2 storage, see the *FAS270/270c Hardware and Service Guide* and *Fibre Channel DiskShelf14 Hardware Guide*, respectively.

**Note:** The examples and information provided in this chapter apply to a Spinnaker rack. If you using a different rack, contact Network Appliance Technical Support for additional information about power configurations.

**Note:** The SpinServer system components must be installed in the Spinnaker rack by following the layout design guidelines that are described in the chapter “Setting Up the Rack” on page 59.

Power distribution units (PDUs) are the core components of the power distribution system within a Spinnaker rack. PDUs are small appliances that include AC power output receptacles, overload protection, and input power cords and plugs. There are four PDUs preinstalled in each Spinnaker rack.

## 11.1 Rack Power Specifications

Spinnaker racks can be ordered as a 120VAC rack or as a 208VAC rack. The rack voltage is determined by the type of PDU that is installed in the rack. The following table shows the specifications for the PDUs used in the 120VAC and 208VAC racks.

**Table 11-1. PDU Specifications**

| Rack Voltage (VAC) | PDU Working Voltage Range (VAC) | PDU Maximum Current (AAC) | PDU Outlet Quantity | PDU Outlet Type | PDU Input Plug and Cord Type | PDU Overload Protection |
|---|---|---|---|---|---|---|
| 120 | 100 - 125 | 16 | 10 | NEMA 5-20R | NEMA L5-20P Permanent 12 ft. cord | 20A Resettable Thermal Circuit Breaker |
| 208 | 90 - 253 | 16 (125V US)<br>12.8 (250V US)<br>12 (125V Canada)<br>8 (250V Canada) | 12 | IEC 60320-C13 | NEMA L6-20P Detachable 12 ft. cord[a] | 20A Resettable Thermal Circuit Breaker |

a. Detachable cord has IEC 60320-C19 female receptacle. PDU has IEC 60320-C20 male inlet.

## 11.2 Power Configuration Examples

Two power configuration examples are included in this chapter. There are other possible 120VAC and 208VAC configurations. Contact Network Appliance Technical Support for additional information about configurations.

In the first example, a 120VAC SpinServer system with a single SpinServer is illustrated. In the second example, a more complex 208VAC SpinServer system with two SpinServers is illustrated.

The components for these two SpinServer systems are installed in a Spinnaker rack, which has four PDUs for power connections.

## Power Configuration for a Single Server in a 120VAC System

In the following illustration, a typical power configuration for a 120VAC SpinServer system with a single SpinServer is shown.

The single SpinServer is connected to one SpinStor 200 RAID enclosure, and the SpinStor 200 RAID enclosure is connected to a SpinStor 200 JBOD. For this 120VAC SpinServer rack setup, a 120-volt UPS is used.

The Spinnaker rack used for this illustration is a rack with four 120-volt PDUs installed.

As shown in the following illustration for this 120VAC SpinServer system, two of the 120-volt PDUs (PDU3 and PDU4) are not used. To provide power redundancy for the two PDUs that are used, the PDUs (PDU1 and PDU2) are each connected to a separate, dedicated branch circuit.

### PDU Power Connections

To provide power redundancy, PDU1 is connected to one branch circuit (Circuit1) and PDU2 is connected to a different branch circuit (Circuit2).

### JBOD Enclosure Power Connections

To provide power redundancy for the JBOD enclosure, the left power cord on the JBOD is connected to PDU1 and the right power cord is connected to PDU2.

### RAID Enclosure Power Connections

To provide power redundancy for the RAID enclosure, the left power cord on the RAID enclosure is connected to PDU1 and the right power cord is connected to PDU2.

### SpinServer Power Connections

To provide power redundancy for the SpinServer, both power cords on the SpinServer are connected to the 120-volt UPS.

### 120-Volt UPS and ATS Connections

In this example, the power cord for the 120-volt UPS is connected to the 120-volt AC transfer switch (ATS). The ATS is connected to both PDU1 and PDU2. If one of the PDUs fails, the ATS automatically switches to the other PDU.

**Important:** Only the SpinServer is connected to the 120-volt UPS. Do not connect any other equipment to the UPS.

**Caution:** You must connect the SpinServer power cord to the same UPS that is connected to the SpinServer COM2 port. Failure to make this connection can result in the loss of data.

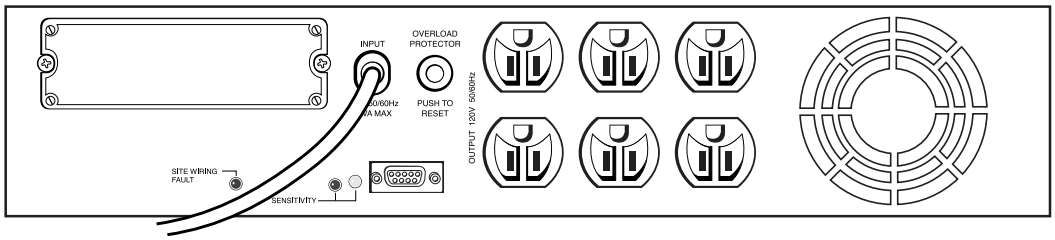


Figure 11-1. Rear view of the 120-volt UPS

## Illustration for a Single Server in a 120VAC System

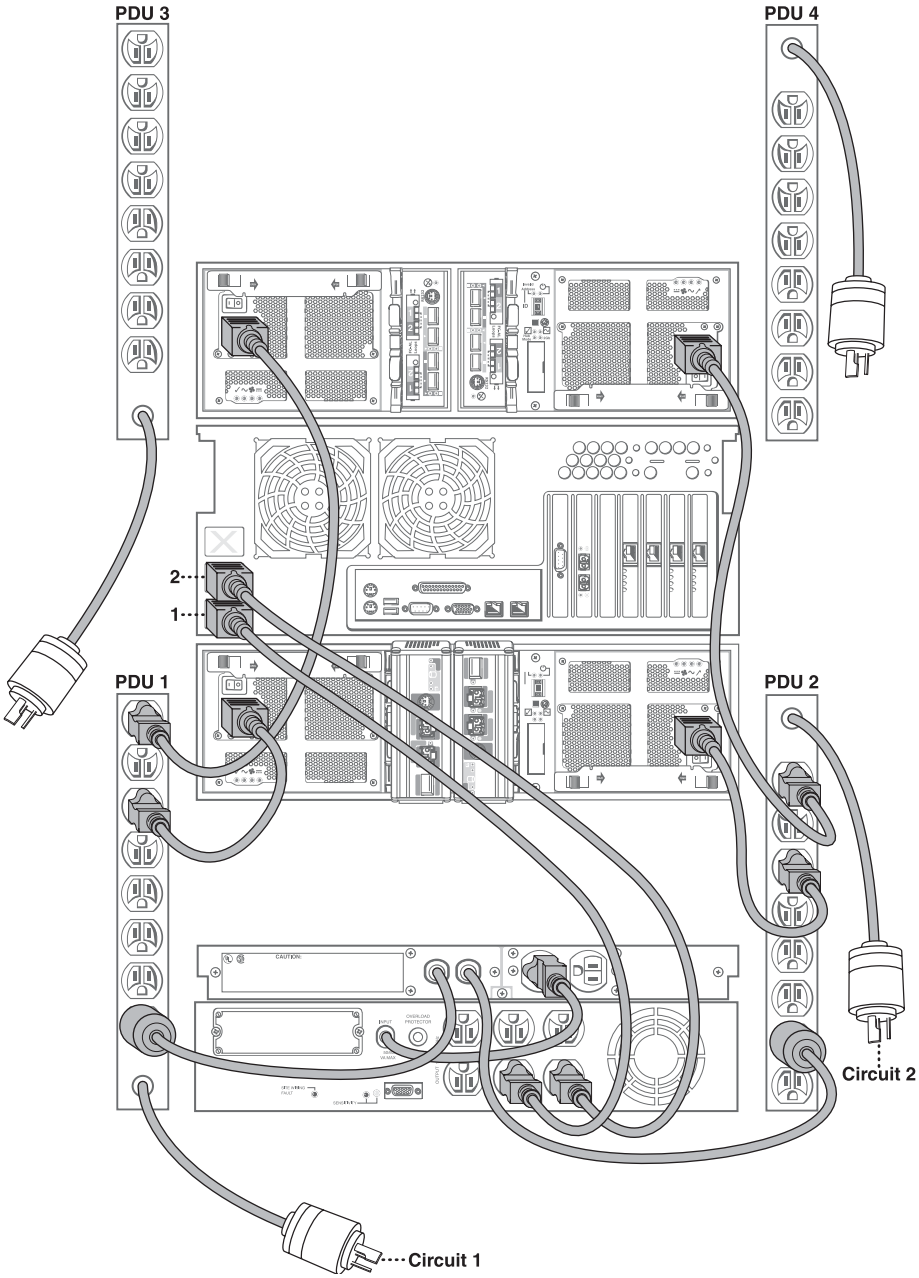


Figure 11-2. A power configuration with one of each of the following components: SpinServer, SpinStor 200 RAID, SpinStor 200 JBOD, 120-volt UPS, and 120-volt ATS

## Power Configuration for Dual Servers in a 208VAC System

In Figure 11-4, a typical power configuration for a 208VAC SpinServer system with two SpinServers is shown.

**Note:** The illustrations and examples in this documentation show the 3U 208-volt UPS. Some 208VAC SpinServer systems were shipped with a 2U 208-volt UPS and a Y cord. Contact Network Appliance Technical Support if you need help creating a power configuration with 2U UPSs.

Each of the SpinServers is connected to one SpinStor 200 RAID enclosure, and that SpinStor 200 RAID enclosure is connected to a SpinStor 200 JBOD. For this 208VAC SpinServer rack setup, two 208-volt UPSs are used.

The Spinnaker rack used for this illustration is a rack with four 208-volt PDUs installed.

As shown in Figure 11-4 for the dual server SpinServer system, two of the 208-volt PDUs (PDU3 and PDU4) are not used. To provide power redundancy for the two PDUs that are used, the PDUs (PDU1 and PDU2) are each connected to a separate, dedicated branch circuit.

### PDU Power Connections

To provide power redundancy, PDU1 is connected to one branch circuit (Circuit1) and PDU2 is connected to a different branch circuit (Circuit2).

### JBOD Enclosure Power Connections

To provide power supply redundancy for each of the JBOD enclosures, the following connections are made:

- The left power cord on JBOD1 is connected to PDU1, and the right power cord is connected to PDU2.
- The left power cord on JBOD2 is connected to PDU1, and the right power cord is connected to PDU2.

### RAID Enclosure Power Connections

To provide power supply redundancy for each of the RAID enclosures, the following connections are made:

- The left power cord on RAID1 is connected to PDU1, and the right power cord is connected to PDU2.
- The left power cord on RAID2 is connected to PDU1, and the right power cord is connected to PDU2.

### SpinServer Power Connections

To provide power supply redundancy for the SpinServers, the following connections are made:

- Both power cords on SpinServer1 are connected to the 208-volt UPS1. UPS1 is connected to 208-volt ATS1, which is connected to two separate, dedicated branch circuits.
- Both power cords on SpinServer2 are connected to the 208-volt UPS2. UPS2 is

connected to 208-volt ATS2, which is connected to two separate, dedicated branch circuits.

**Important:** Only the SpinServer is connected to the 208-volt UPS. Do not connect any other equipment to the UPS.

### 208-Volt UPS Connections

In this example, each 208-volt UPS is connected to a 208-volt ATS. Each ATS is connected to power outlets on two separate, dedicated branch circuits to provide power redundancy UPSs.

**Note:** To provide power supply redundancy for the SpinServer system, the 208-volt ATSs are connected to power outlets that are on separate, dedicated branch circuits that are different circuits than the circuits that are used for PDU1 and PDU2. ATS1 is connected to Circuit3, and ATS2 is connected to Circuit4.

**Important:** Only the SpinServer is connected to the 208-volt UPS. Do not connect any other equipment to the UPS.

**Caution:** You must connect the SpinServer power cord to the same UPS that is connected to the SpinServer COM2 port. Failure to make this connection can result in the loss of data.

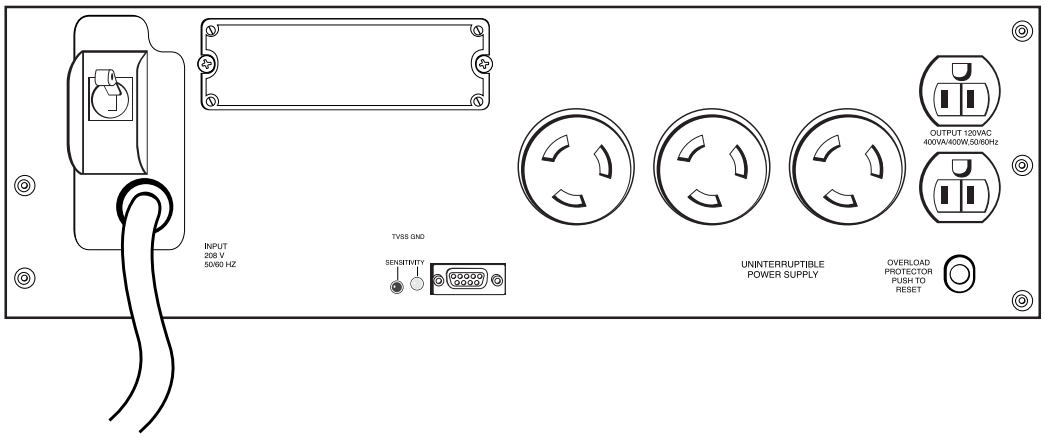


Figure 11-3. Rear view of the 208-volt UPS

## Illustration for Dual Servers in a 208VAC System

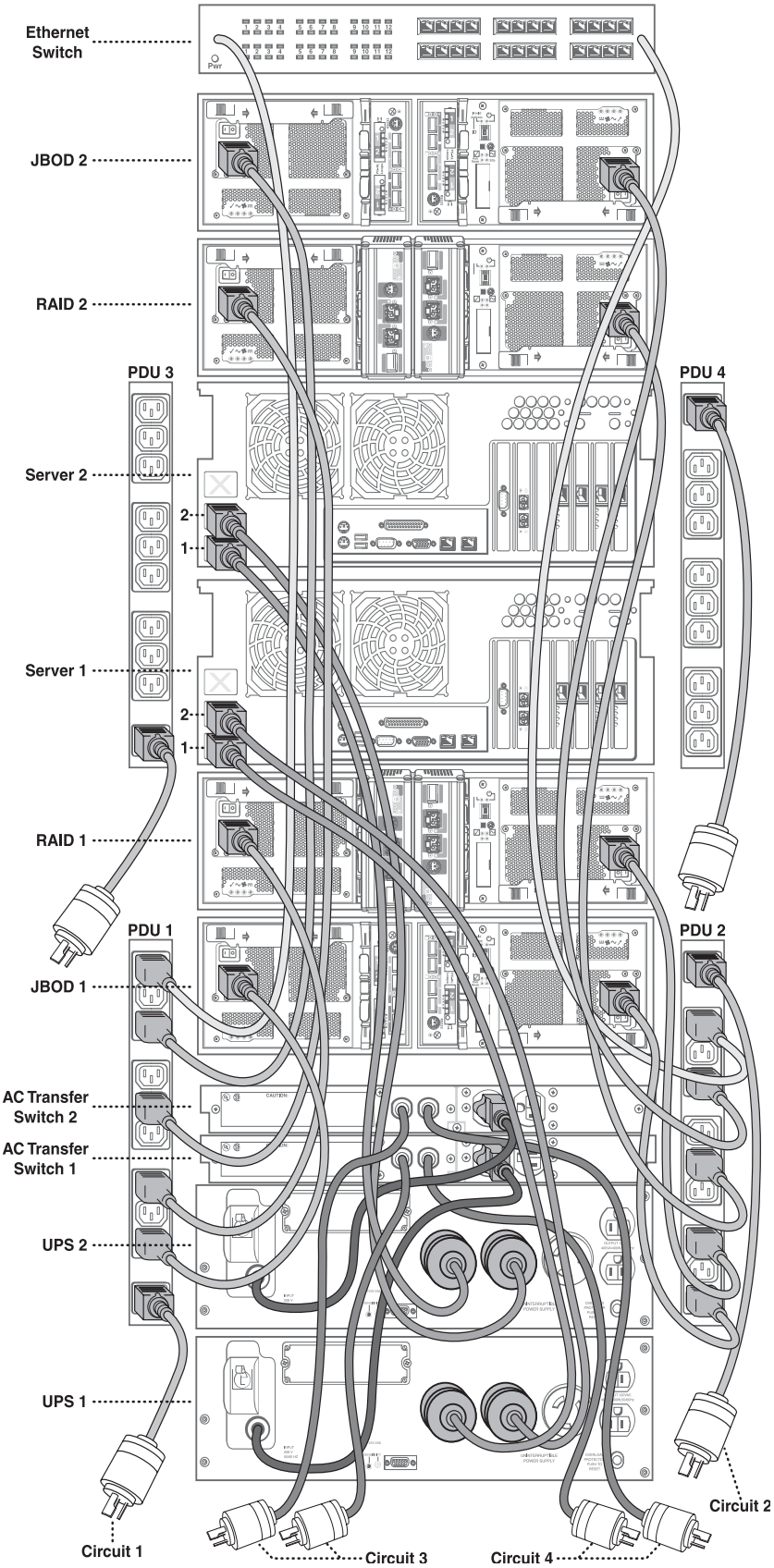


Figure 11-4. A power configuration with two of each of the following components: SpinServer, SpinStor 200 RAID, SpinStor 200 JBOD, 208-volt UPS, 208-volt ATS, and Ethernet switch

# 12.0 Powering Up the System

Before powering up the SpinServer system components, verify the installation of the SpinServer chassis and the storage enclosures.

**Important:** SpinStor 200 storage systems, which are used in the examples in this chapter, are used only with legacy SpinServer systems. New SpinServer systems use FAS270c (RAID) and DS14mk2 (JBOD) storage. For information on FAS270c and DS14mk2 storage, see the *FAS270/270c Hardware and Service Guide* and *Fibre Channel DiskShelf14 Hardware Guide*, respectively.

## 12.1 Checking the Equipment

Check the SpinServer chassis components in the SpinServer and RAID and JBOD storage components.

**Caution:** Condensation can occur during shipment. It is important to allow the equipment to warm to room temperature before installation.

### SpinServer

For the SpinServer, ensure that the SCSI drive carriers, fans, and power supply units are fully inserted and secure in the SpinServer chassis before powering up the system.

### RAID and JBOD Enclosures

For the disk enclosures, ensure that the drive carriers, RAID and JBOD I/O modules, and power supply units are fully inserted and secure in the disk enclosures before powering up the system.

## 12.2 Powering Up the SpinServer System

To start the SpinServer system, turn on the components in the following order:

1. UPS
2. JBOD
3. RAID
4. Backup system
5. SpinServer

### UPS

To power on the UPS, press and release the button labeled **| TEST**, as shown in the following figure. If your SpinServer configuration includes an AC transfer switch (ATS), ensure that the ATS is connected to two separate power sources before powering on the UPS.

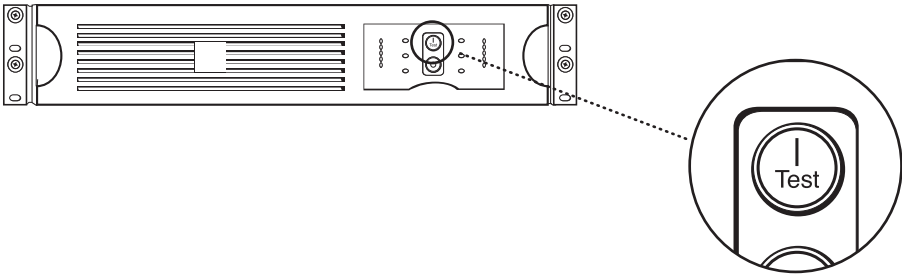


Figure 12-1. Press the **|Test** power button on the 120-volt UPS.

For further information, see the *APC Smart-UPS User's Manual*, which is included in the box with the UPS, and the *Redundant Switch User's Manual*, which is included in the box with the AC transfer switch.

## JBOD

Power up the JBOD enclosures by using the enclosures' power switch or switches. The following illustration shows the location of the power switches on the legacy SpinStor 200 JBOD enclosure. Turn on all power switches.

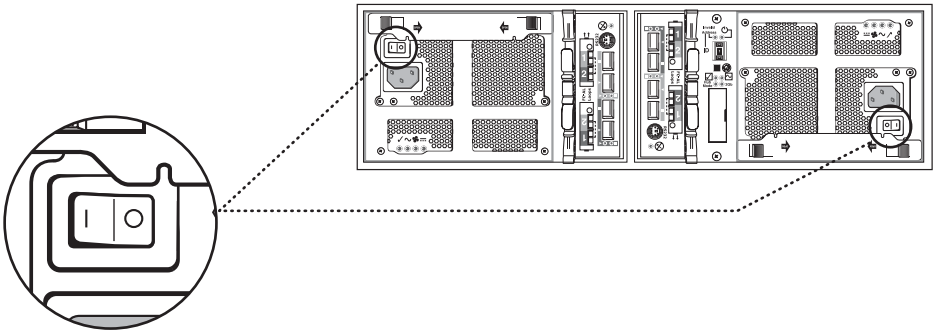

Figure 12-2. Turn on both power switches.

## RAID

After the JBOD enclosures are powered up, power up the RAID enclosures by using the enclosure's power switch or switches. The following illustration shows the location of the power switches on the legacy SpinStor 200 RAID enclosure. Turn on all power switches.

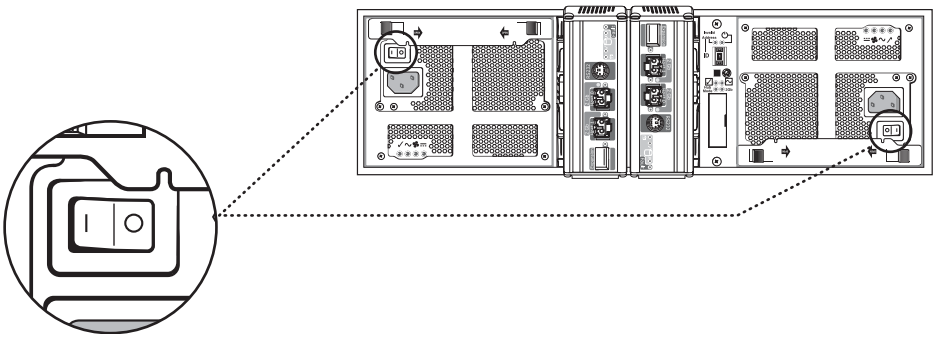

Figure 12-3. Turn on both power switches.

### JBOD Communication

After the RAID enclosure is powered up, check for JBOD communication. On the SpinStor 200 RAID enclosure, the Drive Loop Signal Good LED near the Expansion GBIC on the I/O module indicates the status of JBOD communication. If the communication links are working, this LED is illuminated green. If the communication links are not working, this LED is not illuminated. For information on determining JBOD communication with other RAID enclosures, see the documentation for your RAID enclosure.

## Backup Equipment

To power on backup equipment, perform the following steps:

1. Do not power up the SpinServer.
2. Power up all the other SpinServer system components, including the tape drives.
3. Wait for 30 seconds to ensure that all SpinServer system components are ready.
4. Perform Fibre Channel discovery on all Fibre Channel routers, gateways, and switches.
5. Power up the SpinServer.

**Note:** If the power-up sequence is not successful, repeat Step 4 again and include the SpinServer in performing Fibre Channel discovery.

## SpinServer

To power on the SpinServer, press the power button on the front panel and release quickly.

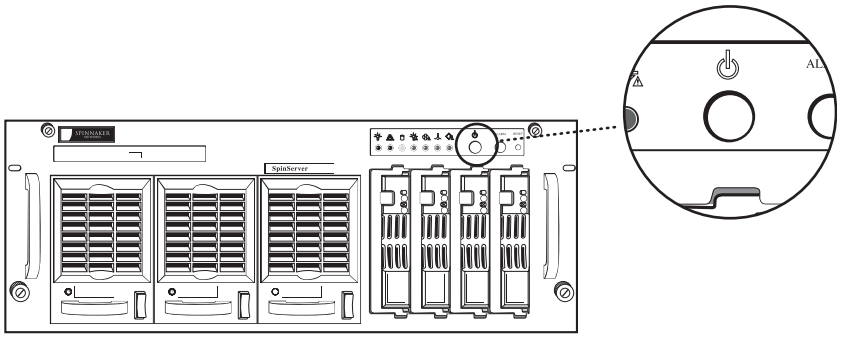


Figure 12-4. Press the power button on the front panel of the SpinServer.

### RAID Communication

After the SpinServer has initialized its Fibre Channel ports, check for RAID communication. On the SpinStor 200 RAID, the Host Port FC Signal Good LEDs near the GBICs indicate the status of RAID communication with the SpinServer. If the communication links are working, this LED is illuminated green. If the communication links are not working, this LED is not illuminated. For information on verifying RAID communication with other RAID enclosures, see the documentation for your RAID enclosure.

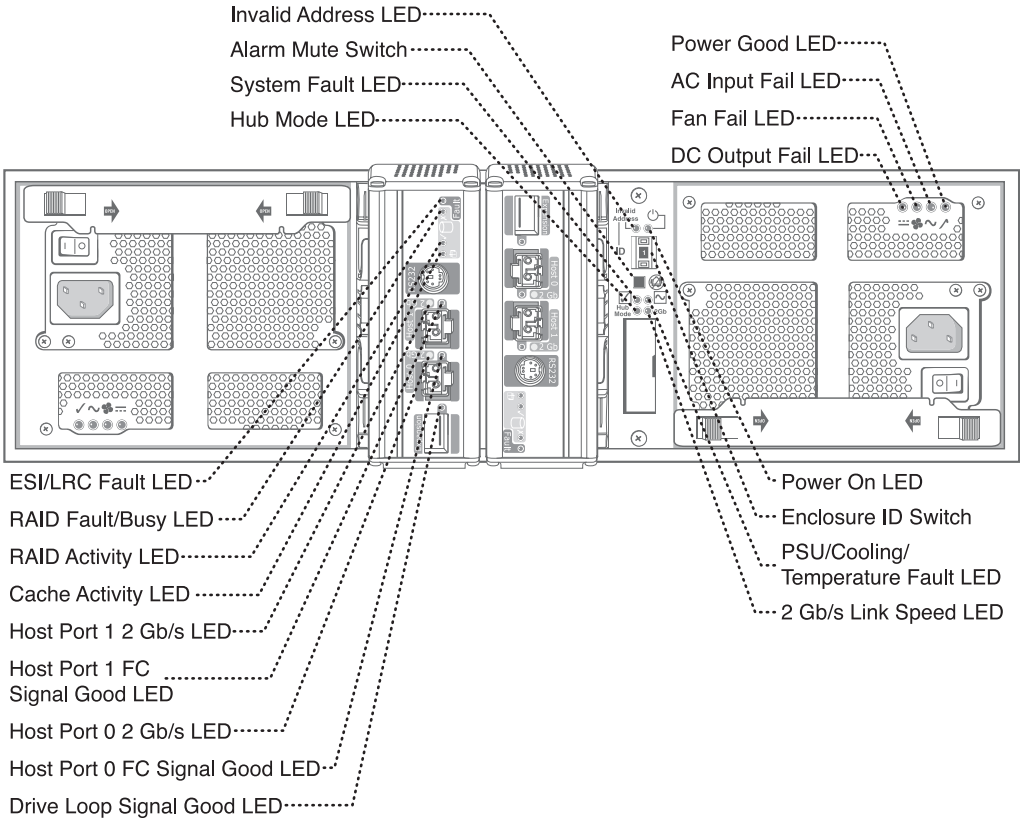


Figure 12-5. SpinStor 200 RAID LEDs

**Note:** All SpinServer LEDs are discussed in the chapter “Troubleshooting” on page 141.

# 13.0 Powering Down the System

When powering down the system, it is important to follow the shutdown procedures so that the SpinServer can send a signal to the disk enclosure to save data. This provides the system with the time necessary to properly save all data before the power is turned off.

**Important:** SpinStor 200 storage systems, which are used in the examples in this chapter, are used only with legacy SpinServer systems. New SpinServer systems use FAS270c (RAID) and DS14mk2 (JBOD) storage. For information on FAS270c and DS14mk2 storage, see the *FAS270/270c Hardware and Service Guide* and *Fibre Channel DiskShelf14 Hardware Guide*, respectively.

## 13.1 Stopping the SpinServer System

To stop the SpinServer system, turn off the components in the following order:

1. SpinServer
2. RAID
3. JBOD
4. Backup system
5. UPS

**Note:** This order is the recommended sequence for shutting down the SpinServer system. However, it is possible to shut down the RAID and JBOD components first and then shut down the SpinServer.

**Turn Off Power to the SpinServer**

**Note:** It is not recommended that the Reset button be used to restart the SpinServer because this method does not provide the system with the time necessary to properly save all data.

To power down the SpinServer, use one of these methods.

- Log onto the system and run the **`spinservers shutdown`** command. After the command completes, it is safe to turn off the SpinServer by pressing the power button

on the front panel.

- Press the power button on the front panel of the SpinServer. The SpinServer runs the UNIX **`shutdown`** command. When the button is pressed, the power LED flashes green once per second while the shutdown routine is performed. The shutdown routine takes about 18 seconds to complete.

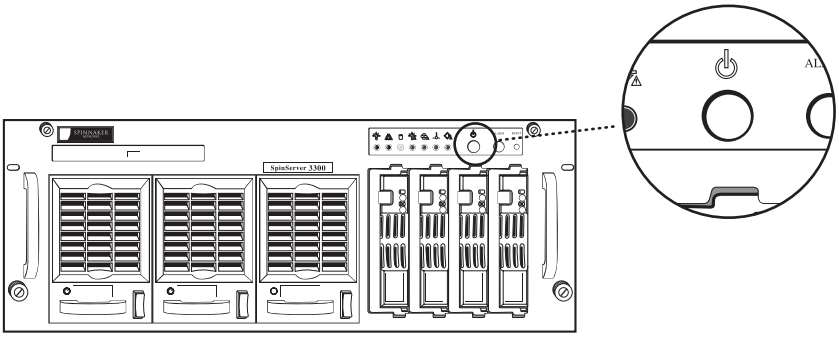


Figure 13-1. Press the power button on the front panel of the SpinServer.

**Note:** This shutdown routine can be overridden by holding the power button down for more than 5 seconds. However, this can cause loss of data because the file system logs have not been previously saved. Overriding the shutdown routine is safe only if the file system logs have been written to disk.

After the shutdown process is finished, the power LED for the SpinServer is no longer illuminated, and the LEDs for the power supplies are illuminated red.

### Turn Off Power to the RAID

After powering down the SpinServer, you can safely turn off the power to the RAID enclosure. For the SpinStor 200 RAID, use the power switches at the back of the enclosure; for other RAID enclosures, use the power switch or switches described in the enclosure's documentation. Turn off all power switches.

On the SpinStor 200 RAID, the fans in the power supplies continue to run for several seconds after the power has been turned off.

### Turn Off Power to the JBOD

After powering down the RAID, you can safely turn off the power to the JBOD. For the SpinStor 200 JBOD, use the power switches at the back of the enclosure; for other JBOD enclosures, use the power switch or switches described in the enclosure's documentation. Turn off all power switches.

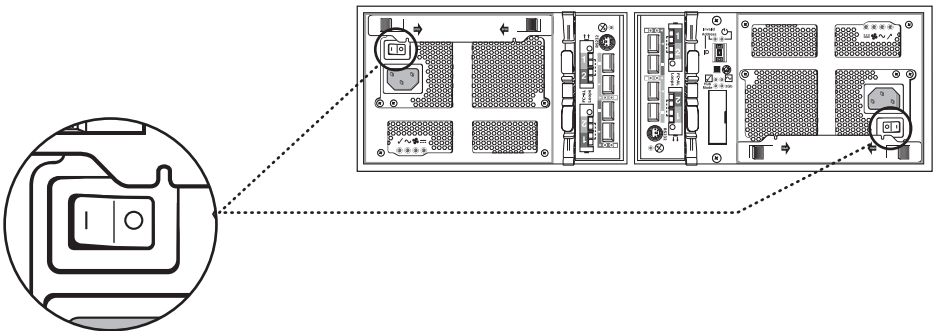

Figure 13-2. Turn off both power switches.

On the SpinStor 200 JBOD, the fans in the power supplies continue to run for several seconds after the power has been turned off.

### Turn Off Power to Backup Equipment

To turn off your backup equipment, see the manufacturer's guidelines.

### Shut Down the UPS

To shut down the UPS, refer to the *APC Smart-UPS User's Manual*, which is included in the box with the UPS.

# *Part IV: Troubleshooting*

Part IV includes the following chapters:

**Chapter 14: Troubleshooting**

“Troubleshooting” on page 141 provides troubleshooting information for the SpinServer and the SpinStor 200 hardware.

**Chapter 15: Disk ID Settings**

“Disk ID Settings” on page 157 provides information and a specific example about setting the disk IDs for SpinStor 200 JBOD disk enclosures.

# 14.0 Troubleshooting

This chapter describes the SpinServer and SpinStor 200 LEDs and fault indicators and discusses hardware troubleshooting techniques.

**Important:** SpinStor 200 storage systems are used only with legacy SpinServer systems. New SpinServer systems use FAS270c (RAID) and DS14mk2 (JBOD) storage. For information on FAS270c and DS14mk2 storage, see the *FAS270/270c Hardware and Service Guide* and *Fibre Channel DiskShelf14 Hardware Guide*, respectively.

## 14.1 SpinServer Front Panel Switches and LEDs

The front panel of the SpinServer includes several LED indicators, audible alarms, and switches.

The LEDs provide information about the operational status of specific components in the SpinServer chassis. Use the three push-button switches to take appropriate action, if necessary, based on the LED and audible alarm information.

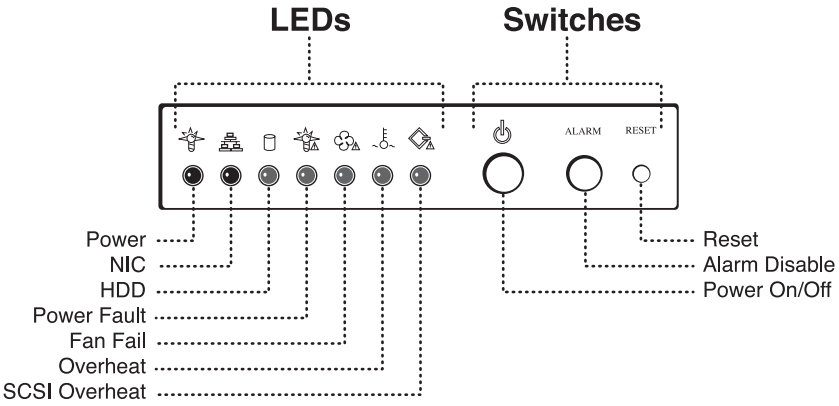


Figure 14-1. The LEDs and switches on the front panel of the SpinServer

## SpinServer Front Panel LEDs

The front control panel has seven LEDs. They provide you with important information about the operational status of specific components of the SpinServer chassis. Descriptions of the LEDs, their messages, and the actions that you must take follow.

**Power:** This LED indicates power is being supplied to the SpinServer power supply units. It is illuminated green when the system is operating.

If the power LED is not illuminated, verify that all power cords are properly connected and the UPS is plugged into a grounded wall outlet. Also, verify that the output of the UPS is turned on.

If the power cords are properly connected and the LED is red, a power unit needs to be replaced. Check the power supply LEDs at the front of the SpinServer to determine which one needs to be replaced.

**NIC:** When flashing green, the network interface card (NIC) connection LED indicates activity on the motherboard.

**HDD:** When flashing green, the hard disk drive (HDD) LED indicates IDE activity. The CD-ROM is the only drive connected to the IDE bus.

**PWR Fault:** When illuminated red, this LED indicates a power supply unit failure. It is accompanied by an audible alarm. The alarm can be disabled with the ALARM push-button switch on the front panel.

In the event of a power supply failure, immediately replace the faulty power supply unit. The power supply unit can be hot swapped. You do not need to power down the system to replace it.

**Note:** Only one power supply unit can be replaced at a time.

**Fan Fail:** When illuminated red, this LED indicates a system fan failure in one or more of the intake or exhaust fans. A fan failure is accompanied by an audible alarm. Pushing the ALARM button disables this alarm.

When a fan stops working, the other system fans increase their revolutions per minute (RPM) to compensate until the failed unit is replaced. In the event of a fan failure, check the fan LEDs and quickly replace the failed unit.

**Note:** Only one fan can be replaced at a time.

**Warning:** To prevent personal injury, always allow the fans to spin down before removing the fan assembly.

**Overheat:** When illuminated red, this LED indicates an overheated condition in the chassis. Check for the following problems and make corrections:

- Cables are obstructing the airflow.
- Ambient room temperature is too high.
- The chassis cover is improperly installed.
- Not all fans are in place and functioning properly.

**SCSI Overheat:** The Single Connector Attachment (SCA) is a type of disk drive connector that includes connection pins for power cables and data wires. When the SCSI drives LED is illuminated red, it indicates an overheated condition in the area of the SCSI drives and backplane. Check for the following problems and make corrections:

- Cables are obstructing the airflow.
- Ambient room temperature is too high.
- The chassis cover is improperly installed.
- Not all fans are in place and functioning properly.

### SpinServer Front Panel Switches

There are three push-button switches on the front of the SpinServer: Power On/Off, Alarm Disable, and Reset. Descriptions of their purposes follow.

**Power:** This is the main power switch. It is used to turn on or off the power that is supplied to the power supply units in the SpinServer.

**Alarm:** An audible alarm is generated to alert you to chassis overheating or failure of fan or power supply. Depressing the ALARM switch disables the alarm. The LED indicating the cause of the alarm remains illuminated after the audible alarm is disabled.

**Reset:** The **Reset** switch restarts the SpinServer.

**Note:** It is not recommended that the **Reset** button be used to restart the SpinServer because this method does not provide the system with the time necessary to properly save all data.

## 14.2 Additional LEDs on the SpinServer

There are additional LED indicators on the SpinServer chassis: SCSI drives and power supply units.

## SpinServer SCSI Drive Carrier LEDs

Each SCSI drive has two LEDs on the front of the drive carrier; the top LED is green and the bottom one is red.

**Note:** The leftmost SCSI drive slot is labeled Slot 0. The drives in Slot 0 and Slot 1 are active drives. The drives in Slots 2 and 3 are not active drives. The LEDs on the inactive drives are not illuminated.

When the green LED is illuminated, the drive is being accessed. When the red LED is illuminated, the SCSI drive has experienced a fault or has failed.

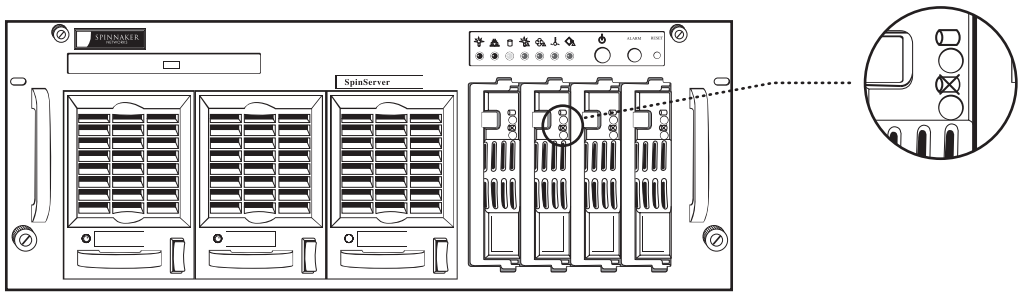


Figure 14-2. The SCSI drive carrier LEDs

**Note:** If one of the SCSI drives experiences a fault or fails, contact Network Appliance Technical Support.

## SpinServer Power Supply LEDs

The SpinServer power supply LEDs are described in this section.

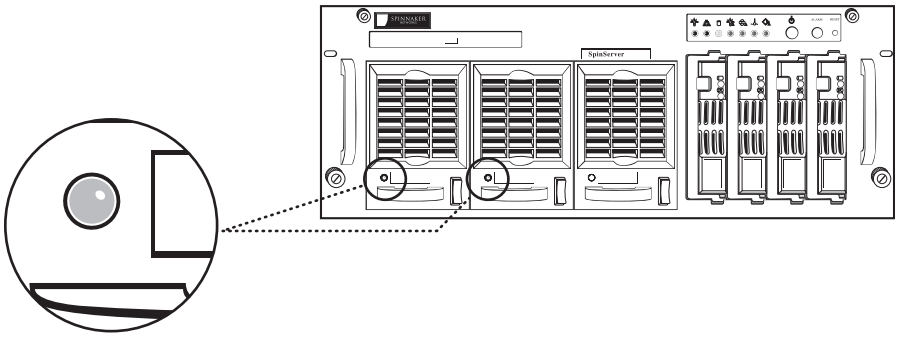


Figure 14-3. The power supply LED

**Note:** The third power supply unit is not an active unit.

Each power unit has a single LED that can be illuminated either red or green or not be illuminated.

**LED Green**

When the power unit has AC power supplied to it and the SpinServer is powered on, the LED is green. This indicates that the unit is operating normally.

**LED Red**

A red LED is normal only when the system has been turned off and is not operating.

If the system is operating and the LED is red, it indicates one of the following problems:

- No power is being applied to that particular power supply unit. Before replacing the power supply unit, check to make sure that the power cord for that unit is plugged into both the power unit and a grounded wall outlet or power distribution unit (PDU).
- That particular power unit has failed.

**LED Off**

If both AC power cords are disconnected, the LEDs on both power supply units are not illuminated.

**Note:** If the AC power cord for one of the power supply units is disconnected, the LED is red for that power supply unit.

There is an audible alarm when AC power is absent from one power supply unit but the other power supply unit is operating normally. The LED for the power supply unit without AC power is not illuminated.

In the event of a power supply failure, immediately replace the faulty power supply unit. The power supply units can be hot swapped. You do not need to power down the system to replace one.

**Note:** Only one power supply unit can be replaced at a time.

## 14.3 SpinStor 200 LEDs and Fault Indicators

The LEDs and fault indicators provide information about the operational status of specific components in the SpinStor 200 RAID and JBOD enclosures.

**Important:** SpinStor 200 storage systems are used only with legacy SpinServer systems. New SpinServer systems use FAS270c (RAID) and DS14mk2 (JBOD) storage. For information on FAS270c and DS14mk2 storage, see the *FAS270/270c Hardware and Service Guide* and *Fibre Channel DiskShelf14 Hardware Guide*, respectively.

## SpinStor 200 Front Panel LEDs

The following illustration shows the location of the status indicators on the front panel of each disk carrier.

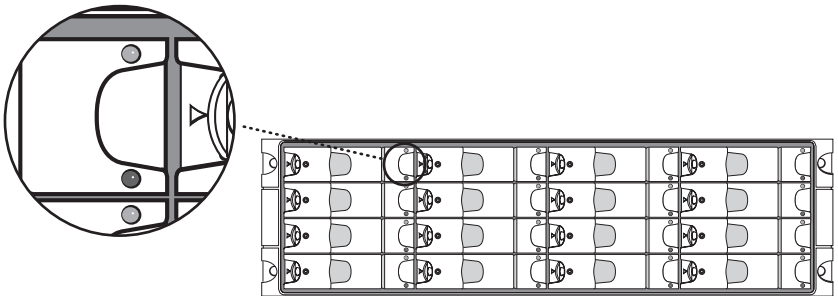

Figure 14-4. The front panel LEDs on the SpinStor 200 RAID or JBOD

### Individual Disk Carrier LEDs

A green LED on a disk carrier indicates normal drive activity. A yellow LED indicates disk drive error or warning.

A blinking yellow LED on an individual disk carrier can indicate one of the following:

- A disk drive failure. (In the case of a disk drive failure, the audible alarm sounds.)
- You have used the **`raid diskdrives locate`** command to locate a disk in the disk enclosure. After the **`raid diskdrives locate`** command is used, the LED on the located disk continues to blink red for the time interval that is specified in the command.

### SpinStor 200 RAID and JBOD Enclosure LEDs

A pulsing green light on all disk carriers indicates normal disk drive activity.

Blinking yellow LEDs on disk carriers in disk enclosures can indicate one of the following:

- A system fault in one of the power supply units. Check the LEDs on the operator panel at the back of the enclosure to determine which device has failed.
- You have used the **`raid enclosures locate`** command to locate a disk enclosure.

### SpinStor 200 RAID Enclosure LEDs

A pulsing green light on all disk carriers indicates normal disk drive activity.

Blinking yellow LEDs on disk carriers in disk enclosures can indicate one of the following:

- You have used the **`raid sets locate`** command to locate the disk drives included in a RAID set. After the **`raid sets locate`** command is used, the LEDs on the located disks in the enclosure continue to blink yellow for the time interval that is specified in the command.
- A RAID set is in a critical state. A critical state indicates that a disk carrier has been

removed from the RAID set.

- A RAID set is being rebuilt by using the **`raid sets startrebuild`** command.
- The consistency of a RAID set is being checked by using the **`raid sets startconsistencycheck`** command.

## SpinStor 200 Fault Indicators

The following illustrations show the location of the fault indicators on the back of the SpinStor 200.

### SpinStor 200 RAID LEDs

The SpinStor 200 RAID LEDs are detailed in the following illustration.

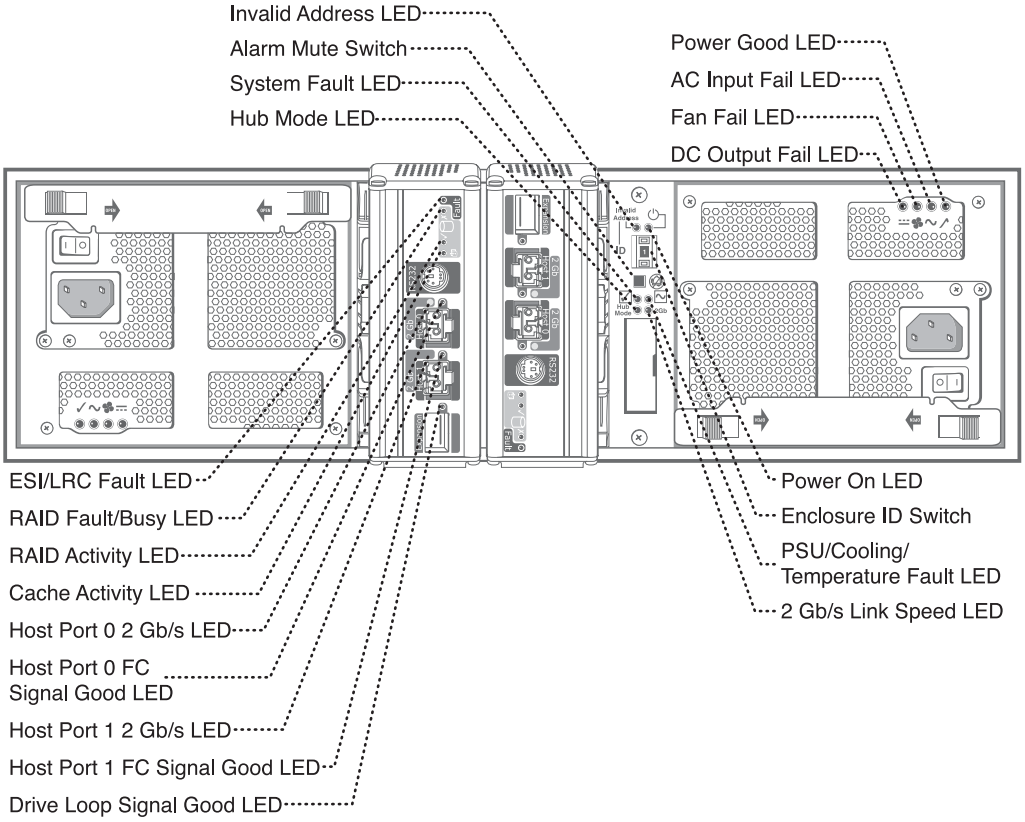


Figure 14-5. SpinStor 200 RAID LEDs

### SpinStor 200 JBOD LEDs

The SpinStor 200 JBOD LEDs are detailed in the following illustration.

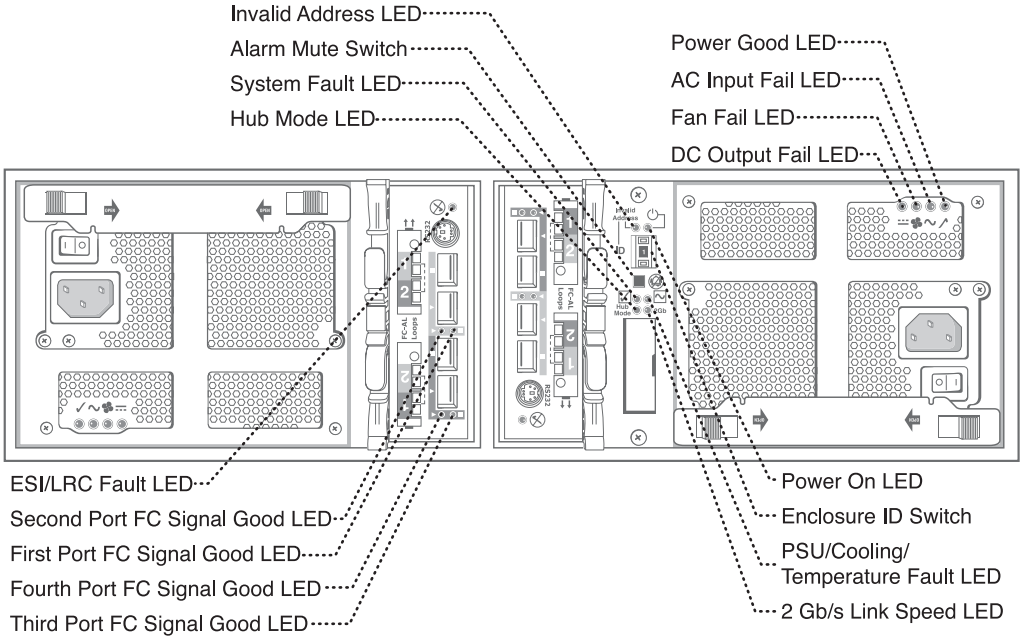


Figure 14-6. SpinStor 200 JBOD LEDs

The following table describes the various LEDs and the states they represent.

**Table 14-1. LEDs on the SpinStor 200 RAID and JBOD Enclosures**

| Operator panel LEDs | | | | | | Other LEDs or alarms | State description |
|---|---|---|---|---|---|---|---|
| **Power (green)** | **PSU/ Cooling/ Temp (yellow)** | **System (yellow)** | **Invalid Address (yellow)** | **FC Loop Speed** | **Hub Mode** | | |
| On | Off | Off | Off | Off | Off | | 5V Aux present; overall power failed |
| On | On | On | On | On | On | Single beep, then double beep | Operator panel power-on test state (5 seconds) |
| On | Off | Off | Off | N/A | N/A | | Power on; normal operation |
| On | On | Off | N/A | N/A | N/A | Power supply unit or fan LEDs | Power-supply unit or fan fault |
| On | On | Flashing | N/A | N/A | N/A | | Temperature too high or too low |
| On | Off | On | N/A | N/A | N/A | ESI LED on I/O module | ESI processor A failure |
| On | Off | On | N/A | N/A | N/A | ESI LED on I/O module | ESI processor B failure |
| On | Off | On | N/A | N/A | N/A | | Unknown I/O module type installed (invalid or mixed), I2C bus failure (inter-ESI processor), or backplane autostart watchdog failure |
| On | Flashing | Flashing | N/A | N/A | N/A | Power supply unit removed | Power supply unit removed and system power redundancy check option set. No indication if the option is not set. |
| On | Off | Flashing | N/A | N/A | N/A | Intermittent audible alarm | Ops to ESI communications failure |

| Operator panel LEDs | | | | | | Other LEDs or alarms | State description |
|---|---|---|---|---|---|---|---|
| **Power (green)** | **PSU/ Cooling/ Temp (yellow)** | **System (yellow)** | **Invalid Address (yellow)** | **FC Loop Speed** | **Hub Mode** | | |
| On | N/A | N/A | Flashing | N/A | N/A | | Invalid address mode setting; change thumbwheel to a valid setting |
| On | N/A | N/A | N/A | On | N/A | | 2Gb FC drive loop speed selected |
| On | N/A | N/A | N/A | N/A | On | | (RAID only) Host-side hub mode enabled |

Contact Network Appliance Technical Support for further information.

## 14.4 Power Connection Troubleshooting

If power is not supplied to a SpinServer system component, check the power cord connections and the circuit breakers on the PDUs.

### Power Cord Connections

If power is not supplied to a SpinServer system component, check all the power cord connections. The following illustration shows power connections for a SpinServer system that uses legacy SpinStor 200 storage.

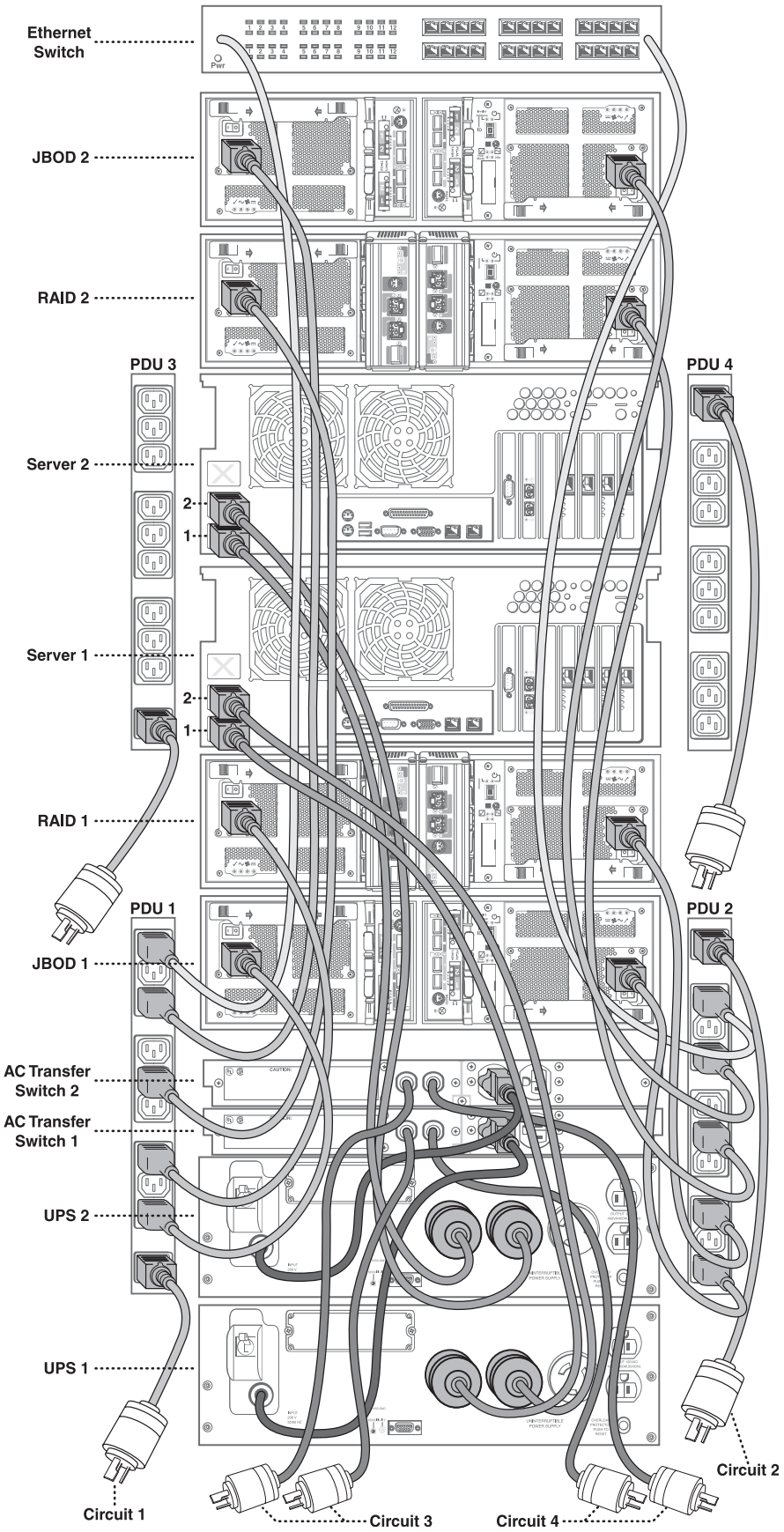


Figure 14-7. Power cord connections

### Circuit Breakers

If you are using a Spinnaker rack, it has four PDUs and each PDU has a circuit breaker, as shown in the following illustration. If all the power cords are properly connected, check the circuit breaker for each PDU.

A circuit breaker is tripped if there is a power overload. To reset the circuit breaker, press the button on the PDU.

**Note:** If access is limited to the circuit breaker from the rear of the rack, remove the side panel of the rack to reach the circuit breaker button.

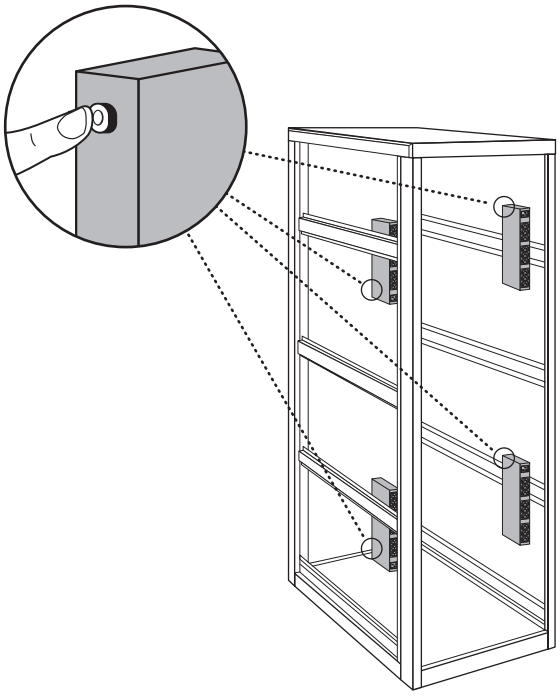

Figure 14-8. Spinnaker rack with PDUs

### UPS

Do not use the **Sensitivity** button on a SpinServer-connected UPS to change the UPS's sensitivity to current fluctuations. The SpinServer registers the change as a drop in power and restarts itself. Make any changes to the UPS's sensitivity before the SpinServer is connected and running.

## 14.5 Disk Enclosure Troubleshooting

Review the following disk enclosure troubleshooting information before calling Network Appliance Technical Assistance.

## System Communication

If a RAID or JBOD enclosure is not recognized, ensure that all RAID and JBOD modules are fully inserted and secure in the enclosure.

## Disk Drive I/O Modules

Use the **raid diskdrives show** command to display general information about all of the disks in a SpinStor 200 RAID subsystem or specific information about one disk.

```
spinserver::> raid diskdrives show
```

The listing of disk drives indicates the Fibre Channel to which the disk drive is attached. During normal operation, half of the disk drives are on Channel 0 and the other half are on Channel 1.

If the disk drive listing shows all of the drives on Channel 0 or all the disk drives on Channel 1, check the I/O modules and cables to ensure that they are all properly seated. After checking all modules and cables for proper connections, go through a power cycle by shutting down the SpinServer, powering off the disk enclosure, reseating the I/O modules, and powering on the disk enclosure.

## Disk Drive Enclosures

To display a listing of the RAID or JBOD enclosures in a SpinStor 200 RAID subsystem, use the **raid enclosures show** command. Disk enclosures are attached by Fibre Channel to the SpinServer. The command displays information about one disk enclosure or all disk enclosures. To display information about one disk enclosure, use the **-deviceid** parameter.

```
spinserver::> raid enclosures show
```

Use the **raid subsystems discoverenclosures** command to locate the missing enclosure.

```
spinserver::> raid subsystems discoverenclosures -id r0
```

where

**r0** is the RAID subsystem ID.

If the enclosure still cannot be located, contact Network Appliance Technical Support for further information.

## Debugging RAID Subsystem Configuration

To provide Technical Support personnel with configuration information to assist you in debugging a SpinServer system that uses SpinStor 200 storage, use the **raid subsystems dumpconfig** command. After the **raid subsystems dumpconfig** command is used, the specified file contains the following RAID subsystem configuration information: RAID subsystem ID, online status, host connections, SpinServer ID, RAID controller IDs, RAID set IDs, battery ID, the number of enclosures, and the number of disk drives.

The following command example dumps the RAID subsystem configuration information into the specified file.

```
spinserver::> raid subsystems dumpconfig -id r0 -file \
/root/dump
```

# 15.0 Disk ID Settings

This chapter provides information about setting the IDs for the disks in the SpinStor 200 JBOD enclosure.

**Important:** SpinStor 200 storage systems are used only with legacy SpinServer systems. New SpinServer systems use FAS270c (RAID) and DS14mk2 (JBOD) storage. For information on FAS270c and DS14mk14 disk ID settings, see the *FAS270/270c Hardware and Service Guide* and *Fibre Channel DiskShelf14 Hardware Guide*, respectively.

**Important:** The configuration procedures in this chapter are provided only as reference for users of legacy SpinServer systems. New SpinServer systems are shipped preconfigured in equipment cabinets.

SpinStor 200 disks are identified by IDs. Disk IDs are determined by the target number and the channel number, by using the following formula.

**Disk ID = 2 x target number + default channel number**

The target number is based on the physical location of the disk in the enclosure and the settings of that enclosure. Each disk has two Fibre Channel ports, channel 0 and channel 1. The RAID controller chooses a default channel for each disk.

**Note:** All disk drives must have unique IDs. Nonunique disk IDs within a RAID subsystem can cause loss of data.

The following illustration shows the disk slot-numbering sequence for all SpinStor 200 enclosures. When you face the disk enclosure, the disk slot in the top left-hand corner is Drive 0.

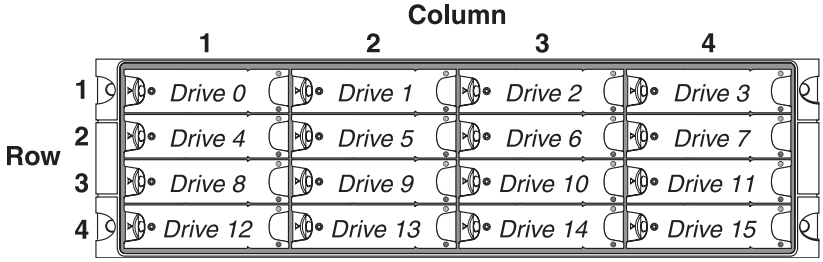


Figure 15-1. The slot settings on the SpinStor 200 enclosure

The base target number for each SpinStor 200 JBOD is set with the enclosure ID switch that is located at the back of the disk enclosure, as shown in Figure 15-2.

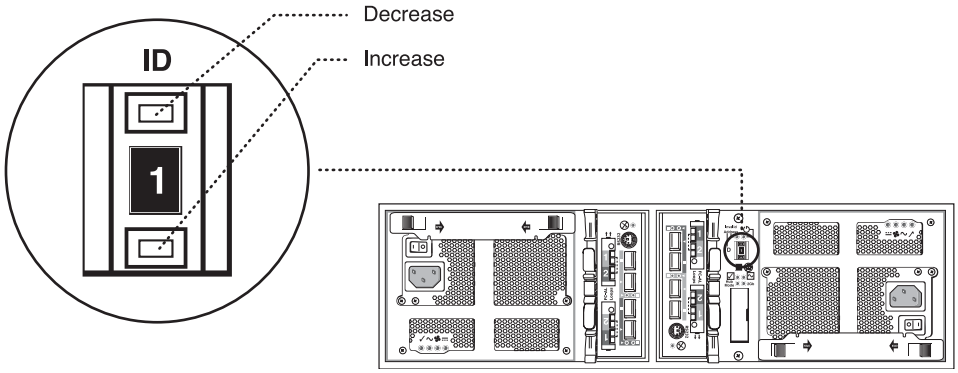


Figure 15-2. The enclosure ID switch on the back of the SpinStor 200 JBOD

For the first expansion SpinStor 200 JBOD, set the enclosure ID number to 2. If you have additional JBOD enclosures, set the enclosure ID of the next JBOD attached to the RAID enclosure to 3, and so on.

The following table illustrates the switch settings and target numbers for the disks in each of the JBOD enclosures.

**Table 15-1. Disk ID Settings for RAID and JBOD enclosures**

| **SpinStor 200** | 1 | 2 | 3 | 4 | 5 | 6 | 7 |
|---|---|---|---|---|---|---|---|
| **SpinStor 200 Type** | **RAID** | **JBOD** | | | | | |
| **Enclosure ID Switch Setting** | 1 | 2 | 3 | 4 | 5 | 6 | 7 |
| | | | | | | | |
| **Drive 0** | 4 | 20 | 36 | 52 | 68 | 84 | 100 |
| **Drive 1** | 5 | 21 | 37 | 53 | 69 | 85 | 101 |
| **Drive 2** | 6 | 22 | 38 | 54 | 70 | 86 | 102 |
| **Drive 3** | 7 | 23 | 39 | 55 | 71 | 87 | 103 |
| **Drive 4** | 8 | 24 | 40 | 56 | 72 | 88 | 104 |
| **Drive 5** | 9 | 25 | 41 | 57 | 73 | 89 | 105 |
| **Drive 6** | 10 | 26 | 42 | 58 | 74 | 90 | 106 |
| **Drive 7** | 11 | 27 | 43 | 59 | 75 | 91 | 107 |
| **Drive 8** | 12 | 28 | 44 | 60 | 76 | 92 | 108 |
| **Drive 9** | 13 | 29 | 45 | 61 | 77 | 93 | 109 |
| **Drive 10** | 14 | 30 | 46 | 62 | 78 | 94 | 110 |
| **Drive 11** | 15 | 31 | 47 | 63 | 79 | 95 | 111 |

| | | | | | | | |
|---|---|---|---|---|---|---|---|
| **Drive 12** | 16 | 32 | 48 | 64 | 80 | 96 | 112 |
| **Drive 13** | 17 | 33 | 49 | 65 | 81 | 97 | 113 |
| **Drive 14** | 18 | 34 | 50 | 66 | 82 | 98 | 114 |
| **Drive 15** | 19 | 35 | 51 | 67 | 83 | 99 | 115 |

# *Part V: Appendixes*

Part V includes the following chapters:

**Chapter 16: Appendix A: Regulatory Compliance Review**

“ Appendix A: Regulatory Compliance Review” on page 163 provides a review of all the product conformity and safety standards to which the SpinServer and SpinStor 200 products comply.

**Chapter 17: Appendix B: Third Party Licenses**

“Appendix B: Third Party Licenses” on page 169 provides information about the licenses for third-party software used in the SpinServer product.

**Chapter 18: Glossary**

“Glossary” on page 191 provides a glossary of commonly used terms in SpinServer documentation.

# 16.0 Appendix A: Regulatory Compliance Review

This chapter provides information about the regulatory compliance reviews for the SpinServer, SpinStor 200 RAID, and SpinStor 200 JBOD.

## 16.1 Regulatory Summary for the SpinServer

The regulatory summary for the SpinServer is listed in the following table:

**Table 16-1. Regulatory Summary for the SpinServer**

| | |
|---|---|
| **Safety** | |
| USA | UL Listed<br>UL60950 |
| Canada | C-UL Listed<br>CAN/CSA-C22.2 No. 60950 |
| EU | CE Marking<br>73/23/EEC<br>EN60950 |
| **Emissions** | |
| USA | FCC CFR47 Part 15 Class A |
| Canada | ICES-003 Class A |
| EU | CE Marking<br>89/336/EEC<br>EN55022 Class A<br>EN61000-3-2<br>EN61000-3-3 |

**Table 16-1. Regulatory Summary for the SpinServer**

| **Immunity** | |
|---|---|
| EU | CE Marking<br>89/336/EEC<br>EN55024<br>EN61000-4-2<br>EN61000-4-3<br>EN61000-4-4<br>EN61000-4-5<br>EN61000-4-6<br>EN61000-4-8<br>EN61000-4-11 |

## 16.2 EU Declaration of Conformity for the SpinServer

The following is the declaration of conformity for the SpinServer.

### SpinServer EU Declaration of Conformity

The SpinServer EU declaration of conformity is listed in the following table.

**Table 16-2. SpinServer EU Declaration of Conformity**

| **Declaration of Conformity** | |
|---|---|
| **Application of Council Directives** | 73/23/EEC Low Voltage Directive<br>89/336/EEC Electromagnetic Compatibility Directive |
| **Standards to Which Conformity Is Declared** | EN60950<br>EN55022 Class A<br>EN61000-3-2<br>EN61000-3-3<br>EN55024<br>EN61000-4-2<br>EN61000-4-3<br>EN61000-4-4<br>EN61000-4-5<br>EN61000-4-6<br>EN61000-4-8<br>EN61000-4-11 |
| **Manufacturer's Name and Address** | Spinnaker Networks, LLC<br>301 Alpha Drive<br>Pittsburgh, PA, USA 15238-2907 |

**Table 16-2. SpinServer EU Declaration of Conformity**

| Declaration of Conformity | |
|---|---|
| **Type of Equipment** | Server (Information Technology Equipment) |
| **Model Information** | SpinServer 4100<br>Part Numbers 2106-0010-01 and 2106-0010-02 |
| **Year of Manufacture** | 2003 and later |
| The undersigned hereby declares that the above named equipment conforms to the above Directives and Standards. | |
| **Date** | May 1, 2003 |
| **Location** | Pittsburgh, PA, USA |
| **Name** | Ben Speiser |
| **Signature** | Signature on file |
| **Title** | Vice President of Hardware Engineering |

## 16.3 Emissions Statements for the SpinServer

The FCC Class A and the ICES-003 Class A emissions statements follow.

### FCC Class A

This device complies with Part 15 of the FCC Rules. Operation is subject to the following two conditions:

1. This device may not cause harmful interference.

2. This device must accept any interference received, including interference that may cause undesired operation.

**Note:** This equipment has been tested and found to comply with the limits for a Class A digital device, pursuant to part 15 of the FCC Rules. These limits are designed to provide reasonable protection against harmful interference when the equipment is operated in a commercial environment. This equipment generates, uses, and can radiate radio frequency energy and, if not installed and used in accordance with the instruction manual, may cause harmful interference to radio communications. Operation of this equipment in a residential area is likely to cause harmful interference, in which case the user will be required to correct the interference at his own expense.

**Note:** Any changes or modifications to this equipment not expressly approved by Network Appliance, Inc., may void the user's FCC granted authority to operate the equipment.

### ICES-003 Class A

This Class A digital apparatus complies with Canadian ICES-003.

Cet appareil numérique de la classe A est conforme à la norme NMB-003 du Canada.

## 16.4 Class 1 Laser Statement for the SpinServer and the SpinStor 200

**Warning**: CLASS 1 LASER PRODUCT

**Warning**: Lasers emit invisible radiation from the aperture opening when no fiber-optic cable is connected. When removing cables do not stare into the open apertures. In addition, install protective aperture covers to fiber ports with no cable connected.

# 16.5 Declaration of Conformity for the SpinStor 200

xyratex

Xyratex
Langstone Road
Havant
Hampshire
PO9 1SA
United Kingdom

+44 (0) 23 92 496000 *Tel*
+44 (0) 23 92 496001 *Fax*

**Declaration of Conformity**

We declare that the product identified as

**Xyratex Goshawk, Model RS-1600-FC**

meets the protection requirements of The Electromagnetic Compatibility Directive 89/336/EEC as amended by 92/31/EEC and 93/68EEC by application of the following standards:

| | |
|---|---|
| EN 55022:1998 | Limits and methods of measurement of radio disturbance characteristics of information technology equipment. Class A. |
| EN 55024:1998 | Information technology equipment – Immunity characteristics - Limits and methods of measurement. |

and also meets the requirements of The Low Voltage Directive 73/23/EEC as amended by 93/68/EEC by application of the following standard:

EN 60950 Safety of information technology equipment : June 2000

Signature ..... Date 10/31/01

Matt Cornell
Senior Vice President, Xyratex Storage Systems

www.xyratex.com

Cert. No. FS29805 ISO 9001

**Xyratex** is the trading name of Xyratex Technology Limited. Registered Office situated in England and Wales. Reg. Number 03134912 Registered address: Langstone Road, Havant Hampshire PO9 1SA. VAT Number GB643 3531 54

## 16.6 International Standards for the SpinStor 200

The SpinStor 200 RAID and JBOD enclosures comply with the requirements of the following agencies and standards:

- CE to IEC 950/EN60950 (SpinStor 200 RAID)
- CE to IEC 950/EN60951 (SpinStor 200 JBOD)
- UL
- cUL

## 16.7 Emissions Statements for the SpinStor 200

### USA Federal Communications Commission (FCC)

**Note:** This equipment has been tested and found to comply with the limits for a class A digital device, pursuant to Part 15 of the FCC rules. These limits are designed to provide reasonable protection against harmful interference when the equipment is operated in a commercial environment. This equipment generates, uses and can radiate radio frequency energy and, if not installed and used in accordance with the instruction manual, may cause harmful interference to radio communications. Operation of this equipment in a residential area is likely to cause harmful interference, in which case the user will be required to correct the interference at his own expense.

Properly shielded and grounded cables and connectors must be used in order to meet FCC emission limits. The supplier is not responsible for any radio or television interference caused by using other than recommended cables and connectors or by unauthorized changes or modifications to this equipment. Unauthorized changes or modifications could void the user's authority to operate the equipment.

This device complies with Part 15 of the FCC Rules. Operation is subject to the following two conditions: (1) this device may not cause harmful interference, and (2) this device must accept any interference received, including interference that may cause undesired operation.

### European Regulations

This equipment complies with European Regulations EN55022 Class A: Limits and Methods of Measurement of Radio Disturbance Characteristics of Information Technology Equipment and EN50082-1: Generic Immunity.

# 17.0 Appendix B: Third Party Licenses

The following licenses apply to third-party software that is included in this product.

## 17.1 Apache Software License

The Apache Software License, Version 1.1

Copyright (C) 1999-2000 The Apache Software Foundation. All rights reserved.

Redistribution and use in source and binary forms, with or without modification, are permitted provided that the following conditions are met:

1. Redistributions of source code must retain the above copyright notice, this list of conditions and the following disclaimer.

2. Redistributions in binary form must reproduce the above copyright notice, this list of conditions and the following disclaimer in the documentation and/or other materials provided with the distribution.

3. The end-user documentation included with the redistribution, if any, must include the following acknowledgment: "This product includes software developed by the Apache Software Foundation (http://www.apache.org/)." Alternately, this acknowledgment may appear in the software itself, if and wherever such third-party acknowledgments normally appear.

4. The names "Cocoon", "The Jakarta Project", "Jakarta-Regexp", and "Apache Software Foundation" must not be used to endorse or promote products derived from this software without prior written permission. For written permission, please contact apache@apache.org.

5. Products derived from this software may not be called "Apache", nor may "Apache" appear in their name, without prior written permission of the Apache Software Foundation.

THIS SOFTWARE IS PROVIDED “AS IS” AND ANY EXPRESSED OR IMPLIED WARRANTIES, INCLUDING, BUT NOT LIMITED TO, THE IMPLIED WARRANTIES OF MERCHANTABILITY AND FITNESS FOR A PARTICULAR PURPOSE ARE DISCLAIMED. IN NO EVENT SHALL THE APACHE SOFTWARE FOUNDATION OR ITS CONTRIBUTORS BE LIABLE FOR ANY DIRECT, INDIRECT, INCIDENTAL, SPECIAL, EXEMPLARY, OR CONSEQUENTIAL DAMAGES (INCLUDING, BUT NOT LIMITED TO, PROCUREMENT OF SUBSTITUTE GOODS OR SERVICES; LOSS OF USE, DATA, OR PROFITS; OR BUSINESS INTERRUPTION) HOWEVER CAUSED AND ON ANY THEORY OF LIABILITY, WHETHER IN CONTRACT, STRICT LIABILITY, OR TORT (INCLUDING NEGLIGENCE OR OTHERWISE) ARISING IN ANY WAY OUT OF THE USE OF THIS SOFTWARE, EVEN IF ADVISED OF THE POSSIBILITY OF SUCH DAMAGE.

This software consists of voluntary contributions made by many individuals on behalf of the Apache Software Foundation. For more information on the Apache Software Foundation, please see <http://www.apache.org/>.

Portions of this software are based upon public domain software originally written at the National Center for Supercomputing Applications, University of Illinois, Urbana-Champaign.

## 17.2 Kerberos Software License

Kerberos
Copyright (C) 1985-2001 by the Massachusetts Institute of Technology.

All rights reserved.

Export of this software from the United States of America may require a specific license from the United States Government. It is the responsibility of any person or organization contemplating export to obtain such a license before exporting.

WITHIN THAT CONSTRAINT, permission to use, copy, modify, and distribute this software and its documentation for any purpose and without fee is hereby granted, provided that the above copyright notice appear in all copies and that both that copyright notice and this permission notice appear in supporting documentation, and that the name of M.I.T. not be used in advertising or publicity pertaining to distribution of the software without specific, written prior permission. Furthermore if you modify this software you must label your software as modified software and not distribute it in such a fashion that it might be confused with the original MIT software. M.I.T. makes no representations about the suitability of this software for any purpose. It is provided "as is" without express or implied warranty.

THIS SOFTWARE IS PROVIDED “AS IS” AND WITHOUT ANY EXPRESS OR IMPLIED WARRANTIES, INCLUDING, WITHOUT LIMITATION, THE IMPLIED WARRANTIES OF MERCHANTIBILITY AND FITNESS FOR A PARTICULAR PURPOSE.

Individual source code files are copyright MIT, Cygnus Support, OpenVision, Oracle, Sun Soft, FundsXpress, and others.

Project Athena, Athena, Athena MUSE, Discuss, Hesiod, Kerberos, Moira, and Zephyr are trademarks of the Massachusetts Institute of Technology (MIT). No commercial use of these trademarks may be made without prior written permission of MIT.

"Commercial use" means use of a name in a product or other for-profit manner. It does NOT prevent a commercial firm from referring to the MIT trademarks in order to convey information (although in doing so, recognition of their trademark status should be given).

## 17.3 Kerberos V5 License

Kerberos V5 includes documentation and software developed at the University of California at Berkeley, which includes this copyright notice:

Copyright (C) 1983 Regents of the University of California.
All rights reserved.

Redistribution and use in source and binary forms, with or without modification, are permitted provided that the following conditions are met:

1. Redistributions of source code must retain the above copyright notice, this list of conditions and the following disclaimer.

2. Redistributions in binary form must reproduce the above copyright notice, this list of conditions and the following disclaimer in the documentation and/or other materials provided with the distribution.

3. All advertising materials mentioning features or use of this software must display the following acknowledgement:

This product includes software developed by the University of California, Berkeley and its contributors.

4. Neither the name of the University nor the names of its contributors may be used to endorse or promote products derived from this software without specific prior written permission.

## 17.4 The OpenLDAP Public License

Version 2.7, 7 September 2001

Redistribution and use of this software and associated documentation ("Software"), with or without modification, are permitted provided that the following conditions are met:

1. Redistributions of source code must retain copyright statements and notices,

2. Redistributions in binary form must reproduce applicable copyright statements and notices, this list of conditions, and the following disclaimer in the documentation and/or other materials provided with the distribution, and

3. Redistributions must contain a verbatim copy of this document.

The OpenLDAP Foundation may revise this license from time to time. Each revision is distinguished by a version number. You may use this Software under terms of this license revision or under the terms of any subsequent revision of the license.

THIS SOFTWARE IS PROVIDED BY THE OPENLDAP FOUNDATION AND ITS CONTRIBUTORS “AS IS” AND ANY EXPRESSED OR IMPLIED WARRANTIES, INCLUDING, BUT NOT LIMITED TO, THE IMPLIED WARRANTIES OF MERCHANTABILITY AND FITNESS FOR A PARTICULAR PURPOSE ARE DISCLAIMED. IN NO EVENT SHALL THE OPENLDAP FOUNDATION, ITS CONTRIBUTORS, OR THE AUTHOR(S) OR OWNER(S) OF THE SOFTWARE BE LIABLE FOR ANY DIRECT, INDIRECT, INCIDENTAL, SPECIAL, EXEMPLARY, OR CONSEQUENTIAL DAMAGES (INCLUDING, BUT NOT LIMITED TO, PROCUREMENT OF SUBSTITUTE GOODS OR SERVICES; LOSS OF USE, DATA, OR PROFITS; OR BUSINESS INTERRUPTION) HOWEVER CAUSED AND ON ANY THEORY OF LIABILITY, WHETHER IN CONTRACT, STRICT LIABILITY, OR TORT (INCLUDING NEGLIGENCE OR OTHERWISE) ARISING IN ANY WAY OUT OF THE USE OF THIS SOFTWARE, EVEN IF ADVISED OF THE POSSIBILITY OF SUCH DAMAGE.

The names of the authors and copyright holders must not be used in advertising or otherwise to promote the sale, use or other dealing in this Software without specific, written prior permission. Title to copyright in this Software shall at all times remain with copyright holders.

OpenLDAP is a registered trademark of the OpenLDAP Foundation.

Copyright 1999-2001 The OpenLDAP Foundation, Redwood City, California, USA. All Rights Reserved. Permission to copy and distribute verbatim copies of this document is granted.

## 17.5 Westhawk SNMP License

Westhawk SNMP
Copyright (C) 2000, 2001 by Westhawk Ltd
www.westhawk.co.uk

Permission to use, copy, modify, and distribute this software for any purpose and without fee is hereby granted, provided that the above copyright notices appear in all copies and that both the copyright notice and this permission notice appear in supporting documentation.

This software is provided “as is” without express or implied warranty.

Author: Tim Panton (thp@westhawk.co.uk)

## 17.6 Net-SNMP License

Various copyrights apply to this package, listed in 4 separate parts below. Please make sure that you read all the parts. Up until 2001, the project was based at UC Davis, and the first part covers all code written during this time. From 2001 onwards, the project has been based at SourceForge, and Networks Associates Technology, Inc. hold the copyright on behalf of the wider Net-SNMP community, covering all derivative work done since then. An additional copyright section has been added as Part 3 below also under a BSD license for the work contributed by Cambridge Broadband Ltd. to the project since 2001. An additional copyright section has been added as Part 4 below also under a BSD license for the work contributed by Sun Microsystems, Inc. to the project since 2003.

Code has been contributed to this project by many people over the years it has been in development, and a full list of contributors can be found in the README file under the THANKS section.

### Part 1: CMU/UCD copyright notice: (BSD like)

Copyright 1989, 1991, 1992 by Carnegie Mellon University

Derivative Work - 1996, 1998-2000 Copyright 1996, 1998-2000 The Regents of the University of California

All Rights Reserved

Permission to use, copy, modify and distribute this software and its documentation for any purpose and without fee is hereby granted, provided that the above copyright notice appears in all copies and that both that copyright notice and this permission notice appear in supporting documentation, and that the name of CMU and The Regents of the University of California not be used in advertising or publicity pertaining to distribution of the software without specific written permission.

CMU AND THE REGENTS OF THE UNIVERSITY OF CALIFORNIA DISCLAIM ALL WARRANTIES WITH REGARD TO THIS SOFTWARE, INCLUDING ALL IMPLIED WARRANTIES OF MERCHANTABILITY AND FITNESS. IN NO EVENT SHALL CMU OR THE REGENTS OF THE UNIVERSITY OF CALIFORNIA BE LIABLE FOR ANY SPECIAL, INDIRECT OR CONSEQUENTIAL DAMAGES OR ANY DAMAGES WHATSOEVER RESULTING FROM THE LOSS OF USE, DATA OR PROFITS, WHETHER IN AN ACTION OF CONTRACT, NEGLIGENCE OR OTHER TORTIOUS ACTION, ARISING OUT OF OR IN CONNECTION WITH THE USE OR PERFORMANCE OF THIS SOFTWARE.

## Part 2: Networks Associates Technology, Inc. copyright notice (BSD)

Copyright (c) 2001-2003, Networks Associates Technology, Inc. All rights reserved.

Redistribution and use in source and binary forms, with or without modification, are permitted provided that the following conditions are met:

- Redistributions of source code must retain the above copyright notice, this list of conditions and the following disclaimer.
- Redistributions in binary form must reproduce the above copyright notice, this list of conditions and the following disclaimer in the documentation and/or other materials provided with the distribution.
- Neither the name of the Networks Associates Technology, Inc nor the names of its contributors may be used to endorse or promote products derived from this software without specific prior written permission.

THIS SOFTWARE IS PROVIDED BY THE COPYRIGHT HOLDERS AND CONTRIBUTORS “AS IS” AND ANY EXPRESS OR IMPLIED WARRANTIES, INCLUDING, BUT NOT LIMITED TO, THE IMPLIED WARRANTIES OF MERCHANTABILITY AND FITNESS FOR A PARTICULAR PURPOSE ARE DISCLAIMED. IN NO EVENT SHALL THE COPYRIGHT HOLDERS OR CONTRIBUTORS BE LIABLE FOR ANY DIRECT, INDIRECT, INCIDENTAL, SPECIAL, EXEMPLARY, OR CONSEQUENTIAL DAMAGES (INCLUDING, BUT NOT LIMITED TO, PROCUREMENT OF SUBSTITUTE GOODS OR SERVICES; LOSS OF USE, DATA, OR PROFITS; OR BUSINESS INTERRUPTION) HOWEVER CAUSED AND ON ANY THEORY OF LIABILITY, WHETHER IN CONTRACT, STRICT LIABILITY, OR TORT (INCLUDING NEGLIGENCE OR OTHERWISE) ARISING IN ANY WAY OUT OF THE USE OF THIS SOFTWARE, EVEN IF ADVISED OF THE POSSIBILITY OF SUCH DAMAGE.

## Part 3: Cambridge Broadband Ltd. copyright notice (BSD)

Portions of this code are copyright (c) 2001-2003, Cambridge Broadband Ltd. All rights reserved.

Redistribution and use in source and binary forms, with or without modification, are permitted provided that the following conditions are met:

- Redistributions of source code must retain the above copyright notice, this list of

conditions and the following disclaimer.

- Redistributions in binary form must reproduce the above copyright notice, this list of conditions and the following disclaimer in the documentation and/or other materials provided with the distribution.
- The name of Cambridge Broadband Ltd. may not be used to endorse or promote products derived from this software without specific prior written permission.

THIS SOFTWARE IS PROVIDED BY THE COPYRIGHT HOLDER "AS IS" AND ANY EXPRESS OR IMPLIED WARRANTIES, INCLUDING, BUT NOT LIMITED TO, THE IMPLIED WARRANTIES OF MERCHANTABILITY AND FITNESS FOR A PARTICULAR PURPOSE ARE DISCLAIMED. IN NO EVENT SHALL THE COPYRIGHT HOLDER BE LIABLE FOR ANY DIRECT, INDIRECT, INCIDENTAL, SPECIAL, EXEMPLARY, OR CONSEQUENTIAL DAMAGES (INCLUDING, BUT NOT LIMITED TO, PROCUREMENT OF SUBSTITUTE GOODS OR SERVICES; LOSS OF USE, DATA, OR PROFITS; OR BUSINESS INTERRUPTION) HOWEVER CAUSED AND ON ANY THEORY OF LIABILITY, WHETHER IN CONTRACT, STRICT LIABILITY, OR TORT (INCLUDING NEGLIGENCE OR OTHERWISE) ARISING IN ANY WAY OUT OF THE USE OF THIS SOFTWARE, EVEN IF ADVISED OF THE POSSIBILITY OF SUCH DAMAGE.

## Part 4: Sun Microsystems, Inc. copyright notice (BSD)

Copyright © 2003 Sun Microsystems, Inc., 4150 Network Circle, Santa Clara, California 95054, U.S.A. All rights reserved.

Use is subject to license terms below.

This distribution may include materials developed by third parties.

Sun, Sun Microsystems, the Sun logo and Solaris are trademarks or registered trademarks of Sun Microsystems, Inc. in the U.S. and other countries.

Redistribution and use in source and binary forms, with or without modification, are permitted provided that the following conditions are met:

- Redistributions of source code must retain the above copyright notice, this list of conditions and the following disclaimer.
- Redistributions in binary form must reproduce the above copyright notice, this list of conditions and the following disclaimer in the documentation and/or other materials provided with the distribution.
- Neither the name of the Sun Microsystems, Inc. nor the names of its contributors may be used to endorse or promote products derived from this software without specific prior written permission.

THIS SOFTWARE IS PROVIDED BY THE COPYRIGHT HOLDERS AND CONTRIBUTORS “AS IS” AND ANY EXPRESS OR IMPLIED WARRANTIES, INCLUDING, BUT NOT LIMITED TO, THE IMPLIED WARRANTIES OF MERCHANTABILITY AND FITNESS FOR A PARTICULAR PURPOSE ARE DISCLAIMED. IN NO EVENT SHALL THE COPYRIGHT HOLDERS OR CONTRIBUTORS BE LIABLE FOR ANY DIRECT, INDIRECT, INCIDENTAL, SPECIAL, EXEMPLARY, OR CONSEQUENTIAL DAMAGES (INCLUDING, BUT NOT LIMITED TO, PROCUREMENT OF SUBSTITUTE GOODS OR SERVICES; LOSS OF USE, DATA, OR PROFITS; OR BUSINESS INTERRUPTION) HOWEVER CAUSED AND ON ANY THEORY OF LIABILITY, WHETHER IN CONTRACT, STRICT LIABILITY, OR TORT (INCLUDING NEGLIGENCE OR OTHERWISE) ARISING IN ANY WAY OUT OF THE USE OF THIS SOFTWARE, EVEN IF ADVISED OF THE POSSIBILITY OF SUCH DAMAGE.

## 17.7 GNU Lesser General Public License

GNU LESSER GENERAL PUBLIC LICENSE
Version 2.1, February 1999

Copyright (C) 1991, 1999 Free Software Foundation, Inc.
59 Temple Place, Suite 330, Boston, MA 02111-1307 USA

Everyone is permitted to copy and distribute verbatim copies of this license document, but changing it is not allowed.

[This is the first released version of the Lesser GPL. It also counts as the successor of the GNU Library Public License, version 2, hence the version number 2.1.]

Preamble

The licenses for most software are designed to take away your freedom to share and change it. By contrast, the GNU General Public Licenses are intended to guarantee your freedom to share and change free software--to make sure the software is free for all its users.

This license, the Lesser General Public License, applies to some specially designated software packages--typically libraries--of the Free Software Foundation and other authors who decide to use it. You can use it too, but we suggest you first think carefully about whether this license or the ordinary General Public License is the better strategy to use in any particular case, based on the explanations below.

When we speak of free software, we are referring to freedom of use, not price. Our General Public Licenses are designed to make sure that you have the freedom to distribute copies of free software (and charge for this service if you wish); that you receive source code or can get it if you want it; that you can change the software and use pieces of it in new free programs; and that you are informed that you can do these things.

To protect your rights, we need to make restrictions that forbid distributors to deny you these rights or to ask you to surrender these rights. These restrictions translate to certain responsibilities for you if you distribute copies of the library or if you modify it.

For example, if you distribute copies of the library, whether gratis or for a fee, you must give the recipients all the rights that we gave you. You must make sure that they, too, receive or can get the source code. If you link other code with the library, you must provide complete object files to the recipients, so that they can relink them with the library after making changes to the library and recompiling it. And you must show them these terms so they know their rights.

We protect your rights with a two-step method: (1) we copyright the library, and (2) we offer you this license, which gives you legal permission to copy, distribute and/or modify the library.

To protect each distributor, we want to make it very clear that there is no warranty for the free library. Also, if the library is modified by someone else and passed on, the recipients should know that what they have is not the original version, so that the original author's reputation will not be affected by problems that might be introduced by others.

Finally, software patents pose a constant threat to the existence of any free program. We wish to make sure that a company cannot effectively restrict the users of a free program by obtaining a restrictive license from a patent holder. Therefore, we insist that any patent license obtained for a version of the library must be consistent with the full freedom of use specified in this license.

Most GNU software, including some libraries, is covered by the ordinary GNU General Public License. This license, the GNU Lesser General Public License, applies to certain designated libraries, and is quite different from the ordinary General Public License. We use this license for certain libraries in order to permit linking those libraries into non-free programs.

When a program is linked with a library, whether statically or using a shared library, the combination of the two is legally speaking a combined work, a derivative of the original library. The ordinary General Public License therefore permits such linking only if the entire combination fits its criteria of freedom. The Lesser General Public License permits more lax criteria for linking other code with the library.

We call this license the "Lesser" General Public License because it does Less to protect the user's freedom than the ordinary General Public License. It also provides other free software developers Less of an advantage over competing non-free programs. These disadvantages are the reason we use the ordinary General Public License for many libraries. However, the Lesser license provides advantages in certain special circumstances.

For example, on rare occasions, there may be a special need to encourage the widest possible use of a certain library, so that it becomes a de-facto standard. To achieve this, non-free programs must be allowed to use the library. A more frequent case is that a free library does the same job as widely used non-free libraries. In this case, there is little to gain by limiting the free library to free software only, so we use the Lesser General Public License.

In other cases, permission to use a particular library in non-free programs enables a greater number of people to use a large body of free software. For example, permission to use the GNU C Library in non-free programs enables many more people to use the whole GNU operating system, as well as its variant, the GNU/Linux operating system.

Although the Lesser General Public License is Less protective of the users' freedom, it does ensure that the user of a program that is linked with the Library has the freedom and the wherewithal to run that program using a modified version of the Library.

The precise terms and conditions for copying, distribution and modification follow. Pay close attention to the difference between a "work based on the library" and a "work that uses the library". The former contains code derived from the library, whereas the latter must be combined with the library in order to run.

GNU LESSER GENERAL PUBLIC LICENSE
TERMS AND CONDITIONS FOR COPYING, DISTRIBUTION AND MODIFICATION

0. This License Agreement applies to any software library or other program which contains a notice placed by the copyright holder or other authorized party saying it may be distributed under the terms of this Lesser General Public License (also called "this License"). Each licensee is addressed as "you".

A "library" means a collection of software functions and/or data prepared so as to be conveniently linked with application programs (which use some of those functions and data) to form executables.

The "Library", below, refers to any such software library or work which has been distributed under these terms. A "work based on the Library" means either the Library or any derivative work under copyright law: that is to say, a work containing the Library or a portion of it, either verbatim or with modifications and/or translated straightforwardly into another language. (Hereinafter, translation is included without limitation in the term "modification".)

"Source code" for a work means the preferred form of the work for making modifications to it. For a library, complete source code means all the source code for all modules it contains, plus any associated interface definition files, plus the scripts used to control compilation and installation of the library.

Activities other than copying, distribution and modification are not covered by this License; they are outside its scope. The act of running a program using the Library is not restricted, and output from such a program is covered only if its contents constitute a work based on the Library (independent of the use of the Library in a tool for writing it). Whether that is true depends on what the Library does and what the program that uses the Library does.

1. You may copy and distribute verbatim copies of the Library's complete source code as you receive it, in any medium, provided that you conspicuously and appropriately publish on each copy an appropriate copyright notice and disclaimer of warranty; keep intact all the notices that refer to this License and to the absence of any warranty; and distribute a copy of this License along with the Library.

You may charge a fee for the physical act of transferring a copy, and you may at your option offer warranty protection in exchange for a fee.

2. You may modify your copy or copies of the Library or any portion of it, thus forming a work based on the Library, and copy and distribute such modifications or work under the terms of Section 1 above, provided that you also meet all of these conditions:

a) The modified work must itself be a software library.

b) You must cause the files modified to carry prominent notices stating that you changed the files and the date of any change.

c) You must cause the whole of the work to be licensed at no charge to all third parties under the terms of this License.

d) If a facility in the modified Library refers to a function or a table of data to be supplied by an application program that uses the facility, other than as an argument passed when the facility is invoked, then you must make a good faith effort to ensure that, in the event an application does not supply such function or table, the facility still operates, and performs whatever part of its purpose remains meaningful.

(For example, a function in a library to compute square roots has a purpose that is entirely well-defined independent of the application. Therefore, Subsection 2d requires that any application-supplied function or table used by this function must be optional: if the application does not supply it, the square root function must still compute square roots.)

These requirements apply to the modified work as a whole. If identifiable sections of that work are not derived from the Library, and can be reasonably considered independent and separate works in themselves, then this License, and its terms, do not apply to those sections when you distribute them as separate works. But when you distribute the same sections as part of a whole which is a work based on the Library, the distribution of the whole must be on the terms of this License, whose permissions for other licensees extend to the entire whole, and thus to each and every part regardless of who wrote it.

Thus, it is not the intent of this section to claim rights or contest your rights to work written entirely by you; rather, the intent is to exercise the right to control the distribution of derivative or collective works based on the Library.

In addition, mere aggregation of another work not based on the Library with the Library (or with a work based on the Library) on a volume of a storage or distribution medium does not bring the other work under the scope of this License.

3. You may opt to apply the terms of the ordinary GNU General Public License instead of this License to a given copy of the Library. To do this, you must alter all the notices that refer to this License, so that they refer to the ordinary GNU General Public License, version 2, instead of to this License. (If a newer version than version 2 of the ordinary GNU General Public License has appeared, then you can specify that version instead if you wish.) Do not make any other change in these notices.

Once this change is made in a given copy, it is irreversible for that copy, so the ordinary GNU General Public License applies to all subsequent copies and derivative works made from that copy.

This option is useful when you wish to copy part of the code of the Library into a program that is not a library.

4. You may copy and distribute the Library (or a portion or derivative of it, under Section 2) in object code or executable form under the terms of Sections 1 and 2 above provided that you accompany it with the complete corresponding machine-readable source code, which must be distributed under the terms of Sections 1 and 2 above on a medium customarily used for software interchange.

If distribution of object code is made by offering access to copy from a designated place, then offering equivalent access to copy the source code from the same place satisfies the requirement to distribute the source code, even though third parties are not compelled to copy the source along with the object code.

5. A program that contains no derivative of any portion of the Library, but is designed to work with the Library by being compiled or linked with it, is called a "work that uses the Library". Such a work, in isolation, is not a derivative work of the Library, and therefore falls outside the scope of this License.

However, linking a "work that uses the Library" with the Library creates an executable that is a derivative of the Library (because it contains portions of the Library), rather than a "work that uses the library". The executable is therefore covered by this License. Section 6 states terms for distribution of such executables.

When a "work that uses the Library" uses material from a header file that is part of the Library, the object code for the work may be a derivative work of the Library even though the source code is not. Whether this is true is especially significant if the work can be linked without the Library, or if the work is itself a library. The threshold for this to be true is not precisely defined by law.

If such an object file uses only numerical parameters, data structure layouts and accessors, and small macros and small inline functions (ten lines or less in length), then the use of the object file is unrestricted, regardless of whether it is legally a derivative work. (Executables containing this object code plus portions of the Library will still fall under Section 6.)

Otherwise, if the work is a derivative of the Library, you may distribute the object code for the work under the terms of Section 6. Any executables containing that work also fall under Section 6, whether or not they are linked directly with the Library itself.

6. As an exception to the Sections above, you may also combine or link a "work that uses the Library" with the Library to produce a work containing portions of the Library, and distribute that work under terms of your choice, provided that the terms permit modification of the work for the customer's own use and reverse engineering for debugging such modifications.

You must give prominent notice with each copy of the work that the Library is used in it and that the Library and its use are covered by this License. You must supply a copy of this License. If the work during execution displays copyright notices, you must include the copyright notice for the Library among them, as well as a reference directing the user to the copy of this License. Also, you must do one of these things:

a) Accompany the work with the complete corresponding machine-readable source code for the Library including whatever changes were used in the work (which must be distributed under Sections 1 and 2 above); and, if the work is an executable linked with the Library, with the complete machine-readable "work that uses the Library", as object code and/or source code, so that the user can modify the Library and then relink to produce a modified executable containing the modified Library. (It is understood that the user who changes the contents of definitions files in the Library will not necessarily be able to recompile the application to use the modified definitions.)

b) Use a suitable shared library mechanism for linking with the Library. A suitable mechanism is one that (1) uses at run time a copy of the library already present on the user's computer system, rather than copying library functions into the executable, and (2) will operate properly with a modified version of the library, if the user installs one, as long as the modified version is interface-compatible with the version that the work was made with.

c) Accompany the work with a written offer, valid for at least three years, to give the same user the materials specified in Subsection 6a, above, for a charge no more than the cost of performing this distribution.

d) If distribution of the work is made by offering access to copy from a designated place, offer equivalent access to copy the above specified materials from the same place.

e) Verify that the user has already received a copy of these materials or that you have already sent this user a copy.

For an executable, the required form of the "work that uses the Library" must include any data and utility programs needed for reproducing the executable from it. However, as a special exception, the materials to be distributed need not include anything that is normally distributed (in either source or binary form) with the major components (compiler, kernel, and so on) of the operating system on which the executable runs, unless that component itself accompanies the executable.

It may happen that this requirement contradicts the license restrictions of other proprietary libraries that do not normally accompany the operating system. Such a contradiction means you cannot use both them and the Library together in an executable that you distribute.

7. You may place library facilities that are a work based on the Library side-by-side in a single library together with other library facilities not covered by this License, and distribute such a combined library, provided that the separate distribution of the work based on the Library and of the other library facilities is otherwise permitted, and provided that you do these two things:

a) Accompany the combined library with a copy of the same work based on the Library, uncombined with any other library facilities. This must be distributed under the terms of the Sections above.

b) Give prominent notice with the combined library of the fact that part of it is a work based on the Library, and explaining where to find the accompanying uncombined form of the same work.

8. You may not copy, modify, sublicense, link with, or distribute the Library except as expressly provided under this License. Any attempt otherwise to copy, modify, sublicense, link with, or distribute the Library is void, and will automatically terminate your rights under this License. However, parties who have received copies, or rights, from you under this License will not have their licenses terminated so long as such parties remain in full compliance.

9. You are not required to accept this License, since you have not signed it. However, nothing else grants you permission to modify or distribute the Library or its derivative works. These actions are prohibited by law if you do not accept this License. Therefore, by modifying or distributing the Library (or any work based on the Library), you indicate your acceptance of this License to do so, and all its terms and conditions for copying, distributing or modifying the Library or works based on it.

10. Each time you redistribute the Library (or any work based on the Library), the recipient automatically receives a license from the original licensor to copy, distribute, link with or modify the Library subject to these terms and conditions. You may not impose any further restrictions on the recipients' exercise of the rights granted herein. You are not responsible for enforcing compliance by third parties with this License.

11. If, as a consequence of a court judgment or allegation of patent infringement or for any other reason (not limited to patent issues), conditions are imposed on you (whether by court order, agreement or otherwise) that contradict the conditions of this License, they do not excuse you from the conditions of this License. If you cannot distribute so as to satisfy simultaneously your obligations under this License and any other pertinent obligations, then as a consequence you may not distribute the Library at all. For example, if a patent license would not permit royalty-free redistribution of the Library by all those who receive copies directly or indirectly through you, then the only way you could satisfy both it and this License would be to refrain entirely from distribution of the Library.

If any portion of this section is held invalid or unenforceable under any particular circumstance, the balance of the section is intended to apply, and the section as a whole is intended to apply in other circumstances.

It is not the purpose of this section to induce you to infringe any patents or other property right claims or to contest validity of any such claims; this section has the sole purpose of protecting the integrity of the free software distribution system which is implemented by public license practices. Many people have made generous contributions to the wide range of software distributed through that system in reliance on consistent application of that system; it is up to the author/donor to decide if he or she is willing to distribute software through any other system and a licensee cannot impose that choice.

This section is intended to make thoroughly clear what is believed to be a consequence of the rest of this License.

12. If the distribution and/or use of the Library is restricted in certain countries either by patents or by copyrighted interfaces, the original copyright holder who places the Library under this License may add an explicit geographical distribution limitation excluding those countries, so that distribution is permitted only in or among countries not thus excluded. In such case, this License incorporates the limitation as if written in the body of this License.

13. The Free Software Foundation may publish revised and/or new versions of the Lesser General Public License from time to time. Such new versions will be similar in spirit to the present version, but may differ in detail to address new problems or concerns.

Each version is given a distinguishing version number. If the Library specifies a version number of this License which applies to it and "any later version", you have the option of following the terms and conditions either of that version or of any later version published by the Free Software Foundation. If the Library does not specify a license version number, you may choose any version ever published by the Free Software Foundation.

14. If you wish to incorporate parts of the Library into other free programs whose distribution conditions are incompatible with these, write to the author to ask for permission. For software which is copyrighted by the Free Software Foundation, write to the Free Software Foundation; we sometimes make exceptions for this. Our decision will be guided by the two goals of preserving the free status of all derivatives of our free software and of promoting the sharing and reuse of software generally.

NO WARRANTY

15. BECAUSE THE LIBRARY IS LICENSED FREE OF CHARGE, THERE IS NO WARRANTY FOR THE LIBRARY, TO THE EXTENT PERMITTED BY APPLICABLE LAW. EXCEPT WHEN OTHERWISE STATED IN WRITING THE COPYRIGHT HOLDERS AND/OR OTHER PARTIES PROVIDE THE LIBRARY "AS IS" WITHOUT WARRANTY OF ANY KIND, EITHER EXPRESSED OR IMPLIED, INCLUDING, BUT NOT LIMITED TO, THE IMPLIED WARRANTIES OF MERCHANTABILITY AND FITNESS FOR A PARTICULAR PURPOSE. THE ENTIRE RISK AS TO THE QUALITY AND PERFORMANCE OF THE LIBRARY IS WITH YOU. SHOULD THE LIBRARY PROVE DEFECTIVE, YOU ASSUME THE COST OF ALL NECESSARY SERVICING, REPAIR OR CORRECTION.

16. IN NO EVENT UNLESS REQUIRED BY APPLICABLE LAW OR AGREED TO IN WRITING WILL ANY COPYRIGHT HOLDER, OR ANY OTHER PARTY WHO MAY MODIFY AND/OR REDISTRIBUTE THE LIBRARY AS PERMITTED ABOVE, BE LIABLE TO YOU FOR DAMAGES, INCLUDING ANY GENERAL, SPECIAL, INCIDENTAL OR CONSEQUENTIAL DAMAGES ARISING OUT OF THE USE OR INABILITY TO USE THE LIBRARY (INCLUDING BUT NOT LIMITED TO LOSS OF DATA OR DATA BEING RENDERED INACCURATE OR LOSSES SUSTAINED BY YOU OR THIRD PARTIES OR A FAILURE OF THE LIBRARY TO OPERATE WITH ANY OTHER SOFTWARE), EVEN IF SUCH HOLDER OR OTHER PARTY HAS BEEN ADVISED OF THE POSSIBILITY OF SUCH DAMAGES.

END OF TERMS AND CONDITIONS

How to Apply These Terms to Your New Libraries

If you develop a new library, and you want it to be of the greatest possible use to the public, we recommend making it free software that everyone can redistribute and change. You can do so by permitting redistribution under these terms (or, alternatively, under the terms of the ordinary General Public License).

To apply these terms, attach the following notices to the library. It is safest to attach them to the start of each source file to most effectively convey the exclusion of warranty; and each file should have at least the "copyright" line and a pointer to where the full notice is found.

<one line to give the library's name and a brief idea of what it does.>
Copyright (C) <year> <name of author>

This library is free software; you can redistribute it and/or modify it under the terms of the GNU Lesser General Public License as published by the Free Software Foundation; either version 2.1 of the License, or (at your option) any later version.

This library is distributed in the hope that it will be useful, but WITHOUT ANY WARRANTY; without even the implied warranty of MERCHANTABILITY or FITNESS FOR A PARTICULAR PURPOSE. See the GNU Lesser General Public License for more details.

You should have received a copy of the GNU Lesser General Public License along with this library; if not, write to the Free Software Foundation, Inc., 59 Temple Place, Suite 330, Boston, MA 02111-1307 USA

Also add information on how to contact you by electronic and paper mail.

You should also get your employer (if you work as a programmer) or your school, if any, to sign a "copyright disclaimer" for the library, if necessary. Here is a sample; alter the names:

Yoyodyne, Inc., hereby disclaims all copyright interest in the library `Frob' (a library for tweaking knobs) written by James Random Hacker.

<signature of Ty Coon>, 1 April 1990
Ty Coon, President of Vice

That's all there is to it!

## 17.8 GNU General Public License

**Note:** This license applies to the Linux Kernel.

NOTE! This copyright does **not** cover user programs that use kernel services by normal system calls—this is merely considered normal use of the kernel, and does **not** fall under the heading of “derived work”. Also note that the GPL below is copyrighted by the Free Software Foundation, but the instance of code that it refers to (the Linux kernel) is copyrighted by me and others who actually wrote it.

Also note that the only valid version of the GPL as far as the kernel is concerned is *this* particular version of the license (ie v2, not v2.2 or v3.x or whatever), unless explicitly otherwise stated.

Linus Torvalds

GNU GENERAL PUBLIC LICENSE
Version 2, June 1991

Copyright (C) 1989, 1991 Free Software Foundation, Inc. 59 Temple Place, Suite 330, Boston, MA 02111-1307 USA
Everyone is permitted to copy and distribute verbatim copies of this license document, but changing it is not allowed.

Preamble

The licenses for most software are designed to take away your freedom to share and change it. By contrast, the GNU General Public License is intended to guarantee your freedom to share and change free software--to make sure the software is free for all its users. This General Public License applies to most of the Free Software Foundation's software and to any other program whose authors commit to using it. (Some other Free Software Foundation software is covered by the GNU Library General Public License instead.) You can apply it to your programs, too.

When we speak of free software, we are referring to freedom, not price. Our General Public Licenses are designed to make sure that you have the freedom to distribute copies of free software (and charge for this service if you wish), that you receive source code or can get it if you want it, that you can change the software or use pieces of it in new free programs; and that you know you can do these things.

To protect your rights, we need to make restrictions that forbid anyone to deny you these rights or to ask you to surrender the rights. These restrictions translate to certain responsibilities for you if you distribute copies of the software, or if you modify it.

For example, if you distribute copies of such a program, whether gratis or for a fee, you must give the recipients all the rights that you have. You must make sure that they, too, receive or can get the source code. And you must show them these terms so they know their rights.

We protect your rights with two steps: (1) copyright the software, and (2) offer you this license which gives you legal permission to copy, distribute and/or modify the software.

Also, for each author's protection and ours, we want to make certain that everyone understands that there is no warranty for this free software. If the software is modified by someone else and passed on, we want its recipients to know that what they have is not the original, so that any problems introduced by others will not reflect on the original authors' reputations.

Finally, any free program is threatened constantly by software patents. We wish to avoid the danger that redistributors of a free program will individually obtain patent licenses, in effect making the program proprietary. To prevent this, we have made it clear that any patent must be licensed for everyone's free use or not licensed at all.

The precise terms and conditions for copying, distribution and modification follow.

GNU GENERAL PUBLIC LICENSE
TERMS AND CONDITIONS FOR COPYING, DISTRIBUTION AND MODIFICATION

0. This License applies to any program or other work which contains a notice placed by the copyright holder saying it may be distributed under the terms of this General Public License. The “Program”, below, refers to any such program or work, and a “work based on the Program” means either the Program or any derivative work under copyright law: that is to say, a work containing the Program or a portion of it, either verbatim or with modifications and/or translated into another language. (Hereinafter, translation is included without limitation in the term “modification”.) Each licensee is addressed as “you”.

Activities other than copying, distribution and modification are not covered by this License; they are outside its scope. The act of running the Program is not restricted, and the output from the Program is covered only if its contents constitute a work based on the Program (independent of having been made by running the Program). Whether that is true depends on what the Program does.

1. You may copy and distribute verbatim copies of the Program’s source code as you receive it, in any medium, provided that you conspicuously and appropriately publish on each copy an appropriate copyright notice and disclaimer of warranty; keep intact all the notices that refer to this License and to the absence of any warranty; and give any other recipients of the Program a copy of this License along with the Program.

You may charge a fee for the physical act of transferring a copy, and you may at your option offer warranty protection in exchange for a fee.

2. You may modify your copy or copies of the Program or any portion of it, thus forming a work based on the Program, and copy and distribute such modifications or work under the terms of Section 1 above, provided that you also meet all of these conditions:

a) You must cause the modified files to carry prominent notices stating that you changed the files and the date of any change.

b) You must cause any work that you distribute or publish, that in whole or in part contains or is derived from the Program or any part thereof, to be licensed as a whole at no charge to all third parties under the terms of this License.

c) If the modified program normally reads commands interactively when run, you must cause it, when started running for such interactive use in the most ordinary way, to print or display an announcement including an appropriate copyright notice and a notice that there is no warranty (or else, saying that you provide a warranty) and that users may redistribute the program under these conditions, and telling the user how to view a copy of this License. (Exception: if the Program itself is interactive but does not normally print such an announcement, your work based on the Program is not required to print an announcement.)

These requirements apply to the modified work as a whole. If identifiable sections of that work are not derived from the Program, and can be reasonably considered independent and separate works in themselves, then this License, and its terms, do not apply to those sections when you distribute them as separate works. But when you distribute the same sections as part of a whole which is a work based on the Program, the distribution of the whole must be on the terms of this License, whose permissions for other licensees extend to the entire whole, and thus to each and every part regardless of who wrote it.

Thus, it is not the intent of this section to claim rights or contest your rights to work written entirely by you; rather, the intent is to exercise the right to control the distribution of derivative or collective works based on the Program.

In addition, mere aggregation of another work not based on the Program with the Program (or with a work based on the Program) on a volume of a storage or distribution medium does not bring the other work under the scope of this License.

3. You may copy and distribute the Program (or a work based on it, under Section 2) in object code or executable form under the terms of Sections 1 and 2 above provided that you also do one of the following:

a) Accompany it with the complete corresponding machine-readable source code, which must be distributed under the terms of Sections 1 and 2 above on a medium customarily used for software interchange; or,

b) Accompany it with a written offer, valid for at least three years, to give any third party, for a charge no more than your cost of physically performing source distribution, a complete machine-readable copy of the corresponding source code, to be distributed under the terms of Sections 1 and 2 above on a medium customarily used for software interchange; or,

c) Accompany it with the information you received as to the offer to distribute corresponding source code. (This alternative is allowed only for noncommercial distribution and only if you received the program in object code or executable form with such an offer, in accord with Subsection b above.)

The source code for a work means the preferred form of the work for making modifications to it. For an executable work, complete source code means all the source code for all modules it contains, plus any associated interface definition files, plus the scripts used to control compilation and installation of the executable. However, as a special exception, the source code distributed need not include anything that is normally distributed (in either source or binary form) with the major components (compiler, kernel, and so on) of the operating system on which the executable runs, unless that component itself accompanies the executable.

If distribution of executable or object code is made by offering access to copy from a designated place, then offering equivalent access to copy the source code from the same place counts as distribution of the source code, even though third parties are not compelled to copy the source along with the object code.

4. You may not copy, modify, sublicense, or distribute the Program except as expressly provided under this License. Any attempt otherwise to copy, modify, sublicense or distribute the Program is void, and will automatically terminate your rights under this License. However, parties who have received copies, or rights, from you under this License will not have their licenses terminated so long as such parties remain in full compliance.

5. You are not required to accept this License, since you have not signed it. However, nothing else grants you permission to modify or distribute the Program or its derivative works. These actions are prohibited by law if you do not accept this License. Therefore, by modifying or distributing the Program (or any work based on the Program), you indicate your acceptance of this License to do so, and all its terms and conditions for copying, distributing or modifying the Program or works based on it.

6. Each time you redistribute the Program (or any work based on the Program), the recipient automatically receives a license from the original licensor to copy, distribute or modify the Program subject to these terms and conditions. You may not impose any further restrictions on the recipients' exercise of the rights granted herein. You are not responsible for enforcing compliance by third parties to this License.

7. If, as a consequence of a court judgment or allegation of patent infringement or for any other reason (not limited to patent issues), conditions are imposed on you (whether by court order, agreement or otherwise) that contradict the conditions of this License, they do not excuse you from the conditions of this License. If you cannot distribute so as to satisfy simultaneously your obligations under this License and any other pertinent obligations, then as a consequence you may not distribute the Program at all. For example, if a patent license would not permit royalty-free redistribution of the Program by all those who receive copies directly or indirectly through you, then the only way you could satisfy both it and this License would be to refrain entirely from distribution of the Program.

If any portion of this section is held invalid or unenforceable under any particular circumstance, the balance of the section is intended to apply and the section as a whole is intended to apply in other circumstances.

It is not the purpose of this section to induce you to infringe any patents or other property right claims or to contest validity of any such claims; this section has the sole purpose of protecting the integrity of the free software distribution system, which is implemented by public license practices. Many people have made generous contributions to the wide range of software distributed through that system in reliance on consistent application of that system; it is up to the author/donor to decide if he or she is willing to distribute software through any other system and a licensee cannot impose that choice.

This section is intended to make thoroughly clear what is believed to be a consequence of the rest of this License.

8. If the distribution and/or use of the Program is restricted in certain countries either by patents or by copyrighted interfaces, the original copyright holder who places the Program under this License may add an explicit geographical distribution limitation excluding those countries, so that distribution is permitted only in or among countries not thus excluded. In such case, this License incorporates the limitation as if written in the body of this License.

9. The Free Software Foundation may publish revised and/or new versions of the General Public License from time to time. Such new versions will be similar in spirit to the present version, but may differ in detail to address new problems or concerns.

Each version is given a distinguishing version number. If the Program specifies a version number of this License which applies to it and “any later version”, you have the option of following the terms and conditions either of that version or of any later version published by the Free Software Foundation. If the Program does not specify a version number of this License, you may choose any version ever published by the Free Software Foundation.

10. If you wish to incorporate parts of the Program into other free programs whose distribution conditions are different, write to the author to ask for permission. For software which is copyrighted by the Free Software Foundation, write to the Free Software Foundation; we sometimes make exceptions for this. Our decision will be guided by the two goals of preserving the free status of all derivatives of our free software and of promoting the sharing and reuse of software generally.

NO WARRANTY

11. BECAUSE THE PROGRAM IS LICENSED FREE OF CHARGE, THERE IS NO WARRANTY FOR THE PROGRAM, TO THE EXTENT PERMITTED BY APPLICABLE LAW. EXCEPT WHEN OTHERWISE STATED IN WRITING THE COPYRIGHT HOLDERS AND/OR OTHER PARTIES PROVIDE THE PROGRAM “AS IS” WITHOUT WARRANTY OF ANY KIND, EITHER EXPRESSED OR IMPLIED, INCLUDING, BUT NOT LIMITED TO, THE IMPLIED WARRANTIES OF MERCHANTABILITY AND FITNESS FOR A PARTICULAR PURPOSE. THE ENTIRE RISK AS TO THE QUALITY AND PERFORMANCE OF THE PROGRAM IS WITH YOU. SHOULD THE PROGRAM PROVE DEFECTIVE, YOU ASSUME THE COST OF ALL NECESSARY SERVICING, REPAIR OR CORRECTION.

12. IN NO EVENT UNLESS REQUIRED BY APPLICABLE LAW OR AGREED TO IN WRITING WILL ANY COPYRIGHT HOLDER, OR ANY OTHER PARTY WHO MAY MODIFY AND/OR REDISTRIBUTE THE PROGRAM AS PERMITTED ABOVE, BE LIABLE TO YOU FOR DAMAGES, INCLUDING ANY GENERAL, SPECIAL, INCIDENTAL OR CONSEQUENTIAL DAMAGES ARISING OUT OF THE USE OR INABILITY TO USE THE PROGRAM (INCLUDING BUT NOT LIMITED TO LOSS OF DATA OR DATA BEING RENDERED INACCURATE OR LOSSES SUSTAINED BY YOU OR THIRD PARTIES OR A FAILURE OF THE PROGRAM TO OPERATE WITH ANY OTHER PROGRAMS), EVEN IF SUCH HOLDER OR OTHER PARTY HAS BEEN ADVISED OF THE POSSIBILITY OF SUCH DAMAGES.

END OF TERMS AND CONDITIONS

How to Apply These Terms to Your New Programs

If you develop a new program, and you want it to be of the greatest possible use to the public, the best way to achieve this is to make it free software which everyone can redistribute and change under these terms.

To do so, attach the following notices to the program. It is safest to attach them to the start of each source file to most effectively convey the exclusion of warranty; and each file should have at least the “copyright” line and a pointer to where the full notice is found.

<one line to give the program’s name and a brief idea of what it does.>
Copyright (C) <year> <name of author>

> This program is free software; you can redistribute it and/or modify it under the terms of the GNU General Public License as published by the Free Software Foundation; either version 2 of the License, or (at your option) any later version.
>
> This program is distributed in the hope that it will be useful, but WITHOUT ANY WARRANTY; without even the implied warranty of MERCHANTABILITY or FITNESS FOR A PARTICULAR PURPOSE. See the GNU General Public License for more details.
> You should have received a copy of the GNU General Public License along with this program; if not, write to the Free Software Foundation, Inc., 59 Temple Place, Suite 330, Boston, MA 02111-1307 USA

Also add information on how to contact you by electronic and paper mail.

If the program is interactive, make it output a short notice like this when it starts in an interactive mode:

> Gnomovision version 69, Copyright (C) year name of author
> Gnomovision comes with ABSOLUTELY NO WARRANTY; for details type ‘show w’.
> This is free software, and you are welcome to redistribute it under certain conditions; type ‘show c’ for details.

The hypothetical commands ‘show w’ and ‘show c’ should show the appropriate parts of the General Public License. Of course, the commands you use may be called something other than ‘show w’ and ‘show c’; they could even be mouse-clicks or menu items--whatever suits your program.

You should also get your employer (if you work as a programmer) or your school, if any, to sign a “copyright disclaimer” for the program, if necessary. Here is a sample; alter the names:

> Yoyodyne, Inc., hereby disclaims all copyright interest in the program ‘Gnomovision’ (which makes passes at compilers) written by James Hacker.
>
> <signature of Ty Coon>, 1 April 1989 Ty Coon, President of Vice

This General Public License does not permit incorporating your program into proprietary programs. If your program is a subroutine library, you may consider it more useful to permit linking proprietary applications with the library. If this is what you want to do, use the GNU Library General Public License instead of this License.

# 18.0 Glossary

**CIFS** - The Common Internet File System is a protocol that defines a standard for client systems to request file services from server systems over a network. CIFS is based on the Standard Server Message Block (SMB) protocol, which is widely used by personal computers and workstations running a vast variety of operating systems.

**CIM** - The Common Information Model is an object-oriented model that provides a conceptual framework for describing management data.

**COM 1** - COM 1 is the name of the serial communications port on the SpinServer that is used to access the command line interface of the SpinServer.

**COM 2** - COM 2 is the name of the serial communications port on the SpinServer that is used to attach the SpinServer to the UPS.

**DIMM** - A Dual In-line Memory Module is a small circuit board that holds memory chips.

**CLI** - The command line interface is the command version of the SpinServer management interface software.

**FC** - Fibre Channel is a set of standards, completely developed through industry cooperation, for a serial I/O bus capable of transferring data between two ports at up to 100 MB/second. Fibre Channel supports point-to-point, arbitrated loop, and switched topologies.

**Gb** - Gigabit is used describe data transfer rates between two entities on a network. In this context, it refers to one billion bits. Network data transfer rates are often measured in gigabits per second (Gbps).

**GB** - Gigabyte is a unit of measure for data storage on computer systems. One gigabyte (GB) is equal to 1,024 megabytes (MB).

**GBICs** - Gigabit Interface Converters are transceivers that convert between electrical signals used by host bus adapters (and similar Fibre Channel and Ethernet devices) and either electrical or optical signals suitable for transmission.

**GbE** - Gigabit Ethernet is a group of Ethernet standards in which data is transmitted at 1 Gb per second.

**GUI** - The Graphical User Interface is the graphical browser version of the SpinServer management interface software.

**HBA** - Host Bus Adapter is an I/O adapter that connects a host I/O bus to a computer's memory system.

**HTML** - Hypertext Markup Language is the authoring language used to create documents that can be displayed on a web browser page.

**ICMP** - Internet Control Message Protocol is an extension to the Internet Protocol (IP). ICMP supports packets containing error, control, and informational messages.

**inode** - Inodes are data structures that contain information about files in UNIX file systems. In the file system where each file resides, each file has an inode and is identified by an inode number (i-number). Inodes provide information on files, including user and group ownership, access mode (read, write, or execute permissions) and type. Inodes are created when a file system is created. There are a set number of inodes, which indicates the maximum number of files the system can hold. A file's inode number can be found by using the **`ls -i`** command.

**I/O** - Input/Output is used to describe any program, operation or device that transfers data between a computer and a peripheral device.

**IP** - Internet Protocol specifies the format of packets (datagrams) and the addressing scheme. Most networks combine IP with a higher-level protocol, such as TCP or UDP, which establishes a virtual connection between a destination and a source.

**JBOD** - Just a Bunch of Disks is storage subsystem using multiple independent disk drives that are not configured according to the RAID system. The expansion disk enclosure in a SpinServer system is a JBOD enclosure.

**Kerberos** - Kerberos is a network authentication protocol developed at the Massachusetts Institute of Technology. Kerberos uses encryption keys to provide authentication for client/server applications. Authentication provides verification of a user's or process's identity to a server. See also **principal**, **SPN**.

**LED** - A light-emitting diode is an electronic device that lights up when electricity is passed through it.

**Mb** - Megabit is a unit of measure used to describe a volume of data storage. 1 Mb = 1,024 kilobits (Kb). It is also used to describe data transfer rates on a network. In this context, it refers to one million bits. Networks are often measured in megabits per second (Mbps).

**MB** - Megabyte is a unit of measure for data storage on computer systems. One megabyte is equal to 1,048,576 (2 to the 20th power) bytes of data.

**MHz** - Megahertz is the unit of measurement of the speed of microprocessors, called the clock speed. One MHz represents one million cycles per second.

**NDMP** - Network Data Management Protocol defines a common architecture for the way heterogeneous file servers on a network are backed up. The protocol allows the creation of a common agent used by the central backup application to back up different file servers running different platforms and platform versions.

**NFS** - Network File System is a client/server application that allows all network users to access shared files stored on computers of different types.

**NICs** - Network Interface Cards are expansion boards that enable network connections for a PC or server.

**NIS** - Network Information Service provides a simple network lookup service consisting of databases and processes. Its purpose is to provide information that needs to be available to the entire network, such as login names, passwords, home directories, and group information.

**NIS+** - Network Information Service Plus was designed to address security problems that NIS cannot address. (There is no relation between NIS+ and NIS. The commands and the overall structure of NIS+ are different from NIS.) NIS+ increases security by using an additional authentication method. Users have a standard login password, which gives them access to the system, and an additional secure or network password.

**NTLM** - NetLanMan is an authentication mechanism used by CIFS.

**NVRAM** - Non-Volatile Random Access Memory is a type of memory that retains its contents when the power is turned off.

**PDF** - Portable Document Format is a file format developed by Adobe Systems that provides an electronic photocopy of a document. PDF captures formatting information from a variety of desktop publishing applications, making it possible to send documents electronically and have them appear on the recipient's monitor, or in printed form, as the writer intended the documents to appear. To view a file in PDF format, you need Adobe Acrobat Reader, a free application distributed by Adobe Systems.

**PDU** - Power Distribution Units are appliances that provide power connections to system components with high voltage requirements.

**Principal** - In Kerberos, a principal is a unique identity to which Kerberos can assign tickets. An example Kerberos principal is **susan/admin@SECURITY.EXAMPLE.COM**.

**RAID** - Redundant Array of Independent Disks is a disk enclosure with RAID controllers. The SpinServer supports RAID levels 0, 1, 3, 5, and 0+1. A RAID set is a group of disks in which the disks independently operate, the data strip size is no smaller than the exported block size, and parity check data is distributed across the array's disks.

**SCSI** - Small Computer System Interface is a parallel interface standard used by computer systems for attaching peripheral devices, such as disk drives and printers.

**SES** - The SCSI Enclosure Services manager reports the operational status of disk drives to the RAID controllers.

**SNMP** - The Simple Network Management Protocol is a protocol for monitoring and managing devices on a network.

**SP** - A Storage Pool is the logical view, as it appears to users, of the compartmentalization of physical storage disks.

**SPN** - In Kerberos, a Service Principal Name is the name by which a client uniquely identifies an instance of a service.

**SSH** - Secure Shell is a program used to log into another computer over a network to securely execute commands from a remote machine, and to move files from one machine to another. It was developed by SSH Communications Security Ltd.

**TCP** - Transmission Control Protocol is a transport protocol. Where the UDP protocol handles only packets, TCP enables two hosts to establish a connection and exchange streams of data. TCP is more reliable than UDP, but slower.

**U** - U specifies one unit of height in an equipment rack. 1 U = 1.75 inches = 4.45 cm.

**UDP** - User Datagram Protocol is a connectionless protocol that runs on top of IP networks, as does TCP. Unlike TCP, UDP provides very few error recovery services, offering instead a direct way to send and receive datagrams over an IP network. It is used primarily for broadcasting messages over a network. UDP is faster than TCP, but less reliable.

**UPS** - An Uninterruptible Power Supply is an appliance that provides power security, with battery power, in the event of a power failure.

**VFS** - A Virtual File System is the primary unit of data storage in the SpinServer system.

**WINS** - The Windows Internet Naming Service supports network clients and servers running Windows operating systems. WINS uses a distributed database that is automatically updated with the names of computers currently available on a Windows Network and the IP address assigned to each one. The SpinServer has the ability to register its CIFS servers with the WINS servers that are defined in the SpinServer system.